Supplementary Materials: Modelling of Tiled Grating Arrangement Efficiency

Haritha Vijayakumar Sheela [1]*, Gabor Horváth [1] and Miklós Füle [1,2]*

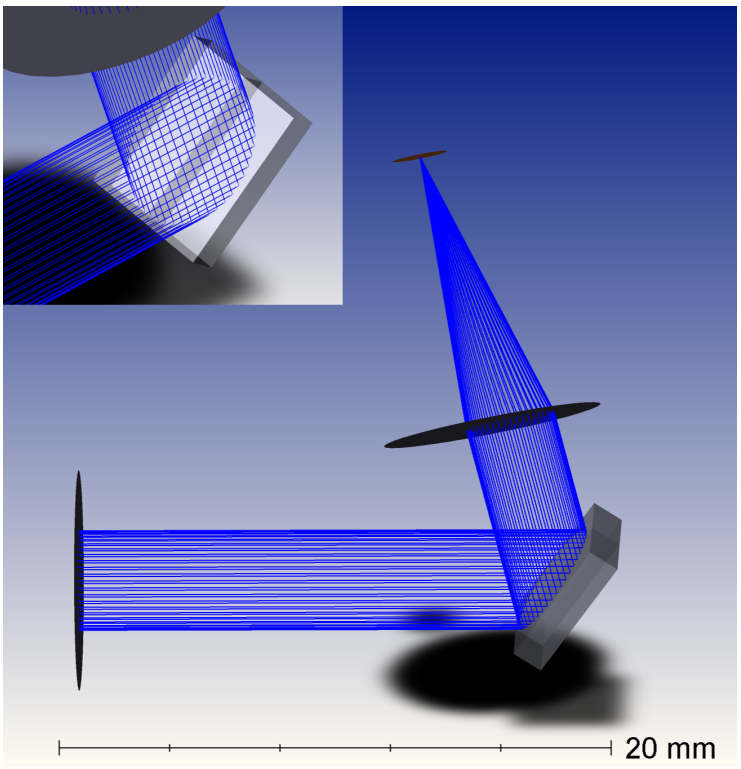

Figure S1. The shaded model created using Zemax for a two-grating assembly. The inset figure represents the TGA assembly.

Rotation 1		Rotation 2	
Rotation in Degree	**Strehl Ratio**	**Rotation in Degree**	**Strehl Ratio**
0.00	0.944	0	0.944
0.01	0.921	0.001	0.939
0.02	0.868	0.005	0.874
0.03	0.808	0.01	0.752
0.04	0.737	0.02	0.537
0.05	0.661	0.03	0.612
0.06	0.592	0.05	0.538
0.08	0.529	0.08	0.574
0.10	0.566	0.10	0.602
0.30	0.562	0.30	0.537
0.50	0.609	0.50	0.621
0.80	0.592	0.80	0.602
1.00	0.581	1.00	0.630

Table S1. Strehl ratios for different rotations for a single grating in TGA obtained from four-grating assembly.

Disclaimer/Publisher's Note: The statements, opinions and data contained in all publications are solely those of the individual author(s) and contributor(s) and not of MDPI and/or the editor(s). MDPI and/or the editor(s) disclaim responsibility for any injury to people or property resulting from any ideas, methods, instructions or products referred to in the content.