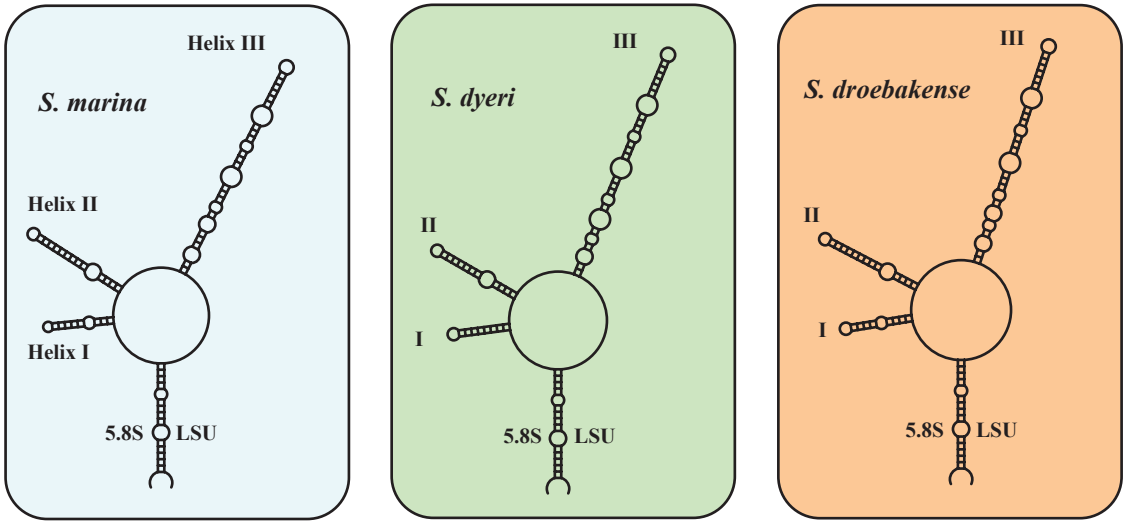
S. marina
Helix III
Helix II
Helix I
5.8S
LSU
S. dyeri
III
II
I
5.8S
LSU
S. droebakense
III
II
I
5.8S
LSU

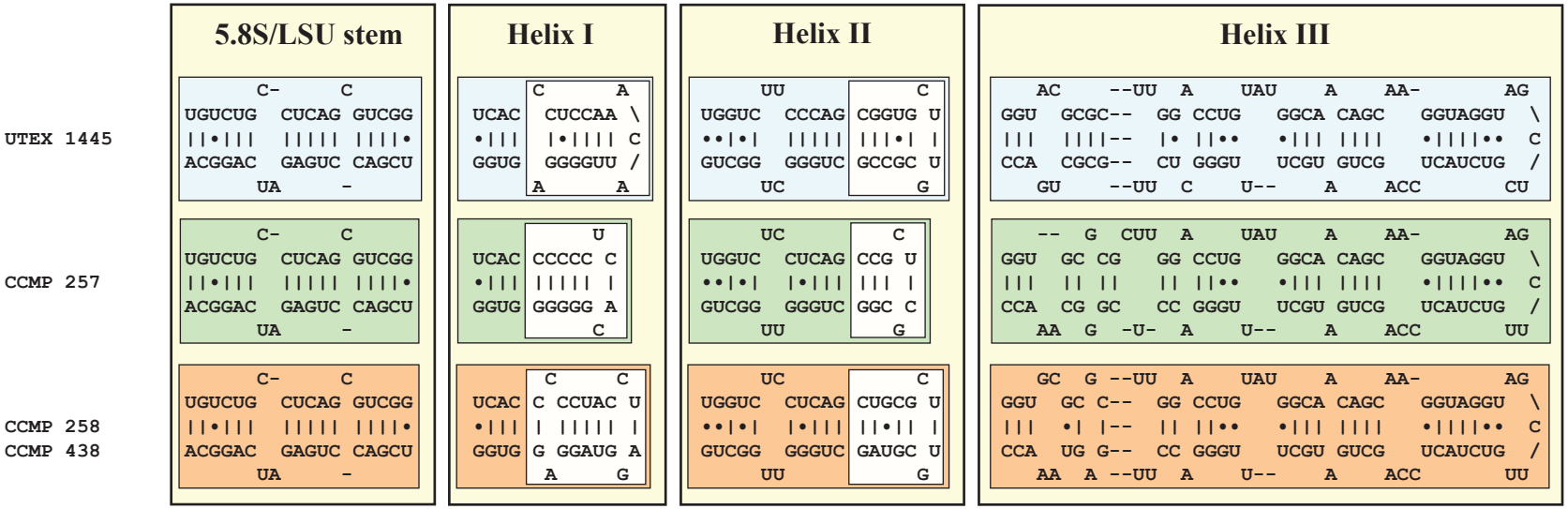
5.8S/LSU stem
Helix I
Helix II
Helix III
UTEX 1445
CCMP 257
CCMP 258
CCMP 438
C- C
UGUCUG CUCAG GUCGG
||•||| ||||| ||||•
ACGGAC GAGUC CAGCU
UA -
C A
UCAC CUCCAA \
•||| |•|||| C
GGUG GGGGUU /
A A
UU C
UGGUC CCCAG CGGUG U
••|•| ||||| |||•| |
GUCGG GGGUC GCCGC U
UC G
AC --UU A UAU A AA- AG
GGU GCGC-- GG CCUG GGCA CAGC GGUAGGU \
||| ||||-- |• ||•• •||| |||| •||||•• C
CCA CGCG-- CU GGGU UCGU GUCG UCAUCUG /
GU --UU C U-- A ACC CU
C- C
UGUCUG CUCAG GUCGG
||•||| ||||| ||||•
ACGGAC GAGUC CAGCU
UA -
U
UCAC CCCCC C
•||| ||||| |
GGUG GGGGG A
C
UC C
UGGUC CUCAG CCG U
••|•| |•||| ||| |
GUCGG GGGUC GGC C
UU G
-- G CUU A UAU A AA- AG
GGU GC CG GG CCUG GGCA CAGC GGUAGGU \
||| || || || ||•• •||| |||| •||||•• C
CCA CG GC CC GGGU UCGU GUCG UCAUCUG /
AA G -U- A U-- A ACC UU
C- C
UGUCUG CUCAG GUCGG
||•||| ||||| ||||•
ACGGAC GAGUC CAGCU
UA -
C C
UCAC C CCUAC U
•||| | ||||| |
GGUG G GGAUG A
A G
UC C
UGGUC CUCAG CUGCG U
••|•| |•||| ||•|| |
GUCGG GGGUC GAUGC U
UU G
GC G --UU A UAU A AA- AG
GGU GC C-- GG CCUG GGCA CAGC GGUAGGU \
||| •| |-- || ||•• •||| |||| •||||•• C
CCA UG G-- CC GGGU UCGU GUCG UCAUCUG /
AA A --UU A U-- A ACC UU