Supplementary Information

Supplementary figure 1 (Fig. S1) Characteristics of the injured patients

Supplementary figure 2 (Fig. S2) Schemes of the targeted PUFA-derived oxylipodome pathways

Supplementary figure 3 (Fig. S3) Posttraumatic time course of circulating ARA-derived oxylipins mainly generated by LOX activity

Supplementary table S1 (Tab. S1) Trauma classification based on the abbreviated injury scale (AIS)

Supplementary table S2 (Tab. S2) Targeted PUFA-derived oxylipins not detected in injured patients

Supplementary table S3 (Tab. S3) Original data of trauma patients and controls

Supplementary figures

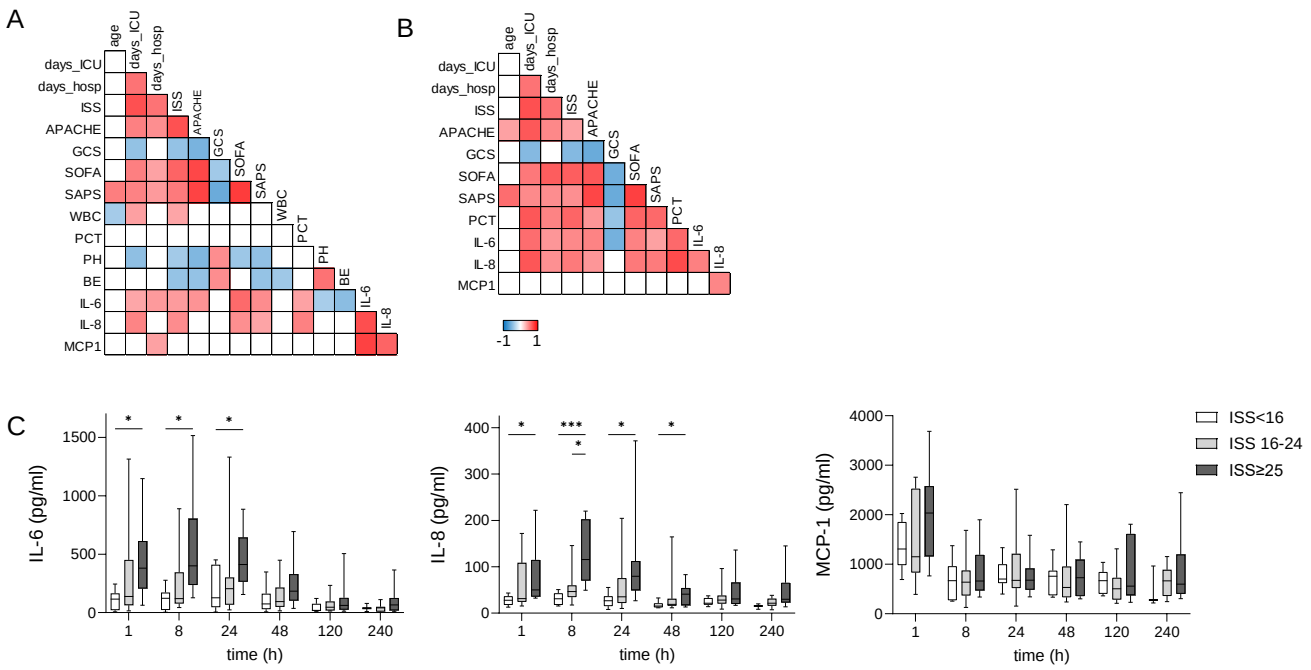

Fig. S1 Characteristics of the analyzed injured patients

A, **B** Correlation of patient's clinicopathological parameters 1 h (**A**) and 24 h (**B**) after trauma. In the correlation matrix square color indicates the magnitude of correlation (Spearman). Only parameters which are exactly time-matched to blood taking for PUFA/metabolite analyses and only significant correlations are shown; Acute Physiology and Chronic Health Evaluation II (APACHE II) score, base excess concentration of extracellular fluid (BE), Glasgow Coma Scale (GCS), intensive care unit (ICU), precalcitonin (PCT), Simplified Acute Physiology Score 3 (SAPS3), Sequential Organ Failure Assessment (SOFA) score, white blood cell count (WBC).

C Posttraumatic time course of circulating cytokines. Comparison between patient groups: mixed effect model, *p<0.05; ***p<0.001.

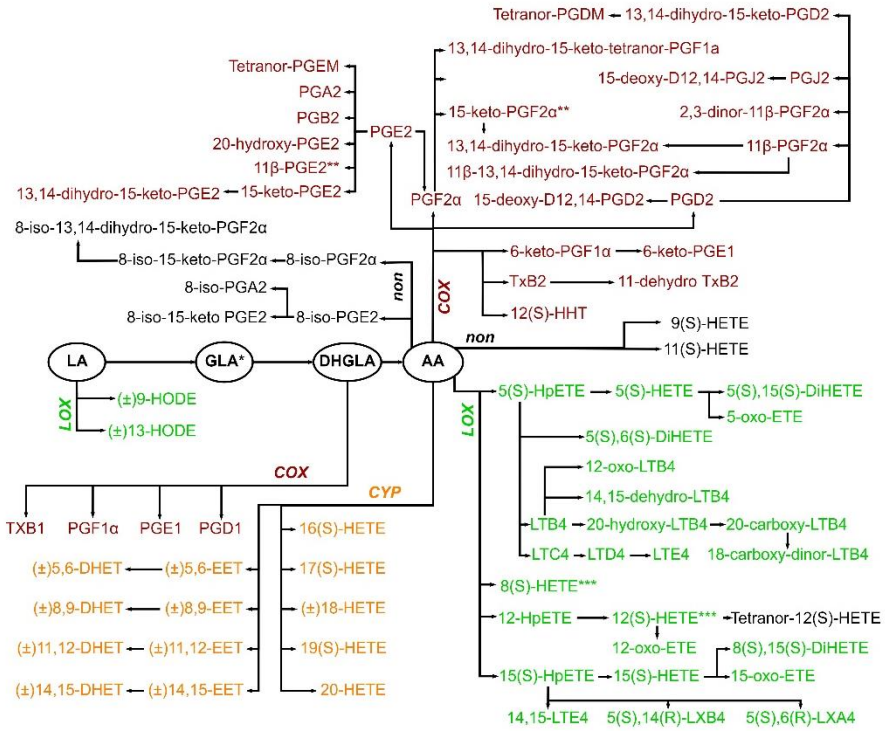

Fig. S2 Schemes of the targeted PUFA-derived oxylipodome pathways
PUFAs are encircled. Three main enzymatic pathways are involved in the release of the PUFA-derived metabolites: cyclooxygenases (COX, red), lipoxygenases (LOX, green); and cytochrome P450 mixed function oxidase enzymes (CYP, orange). Metabolites mainly derived from nonenzymatic free-radical (non) mechanisms are in black. The authors are aware that the scheme does not show all possible pathways and pathway steps. For further explanations see „Introduction".

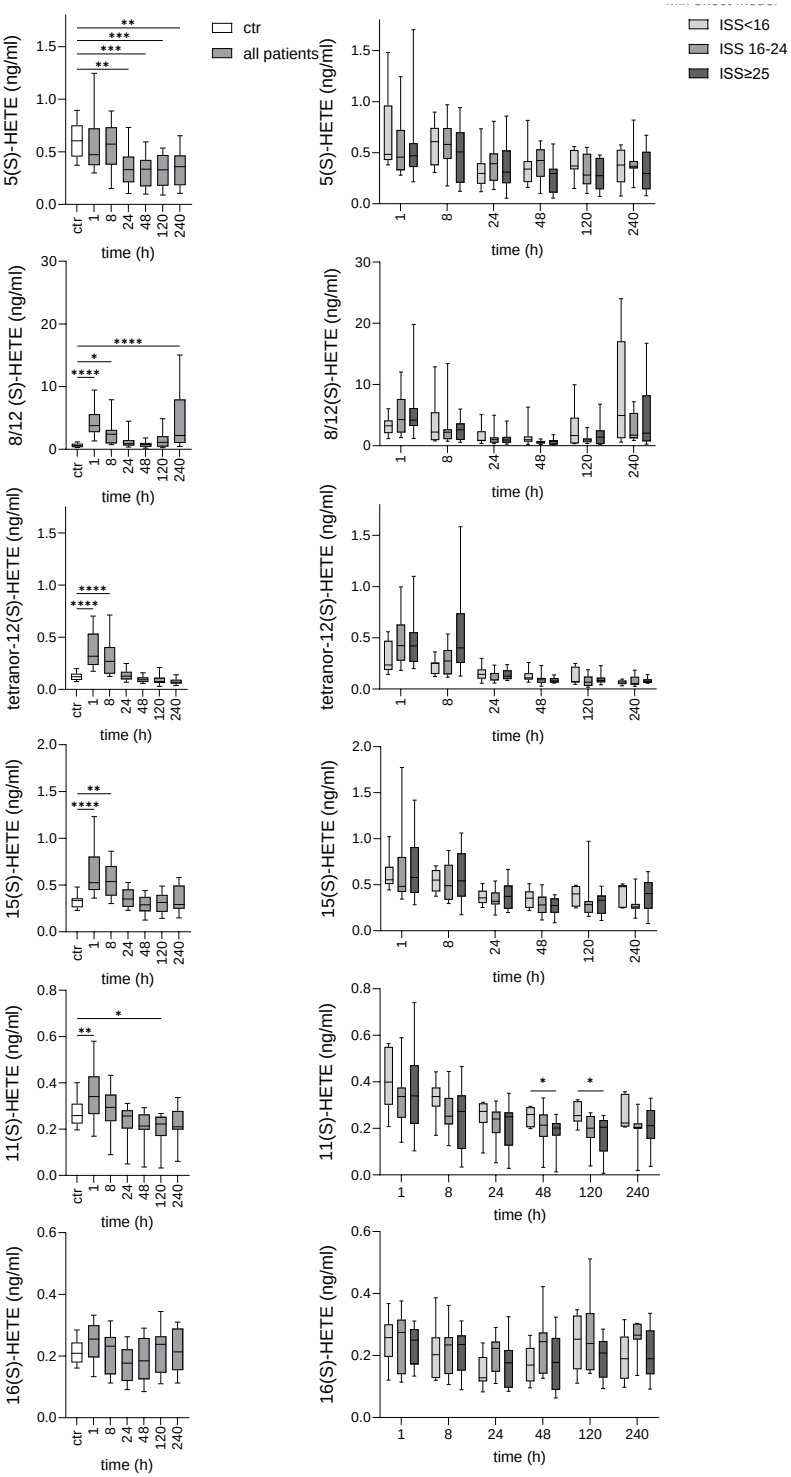

Fig. S3 Posttraumatic time course of circulating ARA-derived oxylipins mainly generated by LOX activity.
Comparison between controls and all patients: one-way ANOVA, comparison between the indicated patient groups: mixed effect model; *p<0.05, **p<0.01, ***p<0.001, ****p<0.000.1.

Supplementary tables

Tab. S1 Trauma classification based on the abbreviated injury scale (AIS)

Trauma group	Injuries	group 1 (ISS <16)	group 2 (ISS 16-24)	group 3 (ISS ≥25)	p-value*	
					groups 1-3	groups 2-3
Neurotrauma	traumatic brain injury	3	3	7	0.414	0.414
	spinal cord injury	0	0	3	0.230	0.230
Facial trauma	eye injury	0	2	1	1	0.565
	fractured face	1	3	5	0.180	1
	open wound face	0	0	1	1	1
Neck trauma	esophageal injury	0	0	0	1	1
	laryngeal trauma	0	1	0	1	0.440
	tracheal trauma	0	0	0	1	1
Thoracic trauma	internal organs injury	2	3	11	0.005	0.017
	other injuries	5	2	12	0.081	0.001
Abdominal trauma	internal organs injury	0	1	9	0.001	0.012
	other injuries	0	0	1	1	1
Spinal trauma	fracture	2	2	10	0.015	0.015
	luxation/distortion	0	0	2	0.487	0.487
Pelvic trauma	fracture	1	5	7	0.042	1
Upper extremities trauma	fracture	4	4	8	0.428	0.428
	luxation/distortion	1	4	2	1	0.350
Lower extremities trauma	fracture	4	4	9	0.238	0.238
	luxation/distortion	1	6	2	1	0.081

Fisher's exact test; groups 1 and 2 were not different

Tab. S2 Targeted PUFA-derived oxylipins not detected in injured patients or controls

	metabolite	derived from	main pathway	molecular formula
1	TxB1	DHGLA	COX	C20H36O6
2	PGD1	DHGLA	COX	C20H34O5
3	PGE1	DHGLA	COX	C20H34O5
4	PGF1a	DHGLA	COX	C20H36O5
5	6-keto-PGE1	ARA	COX	C20H32O6
6	PGD2	ARA	COX	C20H32O5
7	15-deoxy-D12,14-PGD2	ARA	COX	C20H30O4
8	13,14-dihydro-15-keto-PGD2	ARA	COX	C20H32O5
9	tetranor-PGDM	ARA	COX	C16H24O7
10	11b-13,14-dihydro-15-keto-PGF2a	ARA	COX	C20H34O5
11	2,3-dinor-11β-PGF2α	ARA	COX	C18H30O5
12	15-deoxy-D12,14-PGJ2	ARA	COX	C20H28O3
13	tetranor-PGEM	ARA	COX	C16H24O7
14	PGA2	ARA	COX	C20H30O4
15	PGB2	ARA	COX	C20H30O4
16	20-hydroxy-PGE2	ARA	COX	C20H32O6
17	15-keto-PGE2	ARA	COX	C20H30O5
18	20-hydroxy-PGF2a	ARA	COX	C20H34O6
19	13,14-dihydro-15-keto PGF1α	ARA	COX	C20H36O5
20	(±)5,6-EET	ARA	CYP	C20H32O3
21	(±)8,9-EET	ARA	CYP	C20H32O3
22	(±)11,12-EET	ARA	CYP	C20H32O3
23	5(S)-HpETE	ARA	LOX	C20H32O4
24	5-oxo-ETE	ARA	LOX	C20H30O3
25	5(S),6(S)-DiHETE	ARA	LOX	C20H32O4
26	5(S),15(S)-DiHETE	ARA	LOX	C20H32O4
27	LTB4	ARA	LOX	C20H32O4
28	12-oxo-LTB4	ARA	LOX	C20H30O4
29	14,15-dehydro-LTB4	ARA	LOX	C20H30O4
30	20-hydroxy-LTB4	ARA	LOX	C20H32O5
31	20-carboxy-LTB4	ARA	LOX	C20H30O6
32	18-carboxy-dinor-LTB4	ARA	LOX	C18H26O6
33	LTC4	ARA	LOX	C30H47N3O9S
34	LTD4	ARA	LOX	C25H40N2O6S
35	12(S)-HpETE	ARA	LOX	C20H32O4
36	15(S)-HpETE	ARA	LOX	C20H32O4
37	8(S),15(S)-DiHETE	ARA	LOX	C20H32O4
38	15-oxo-ETE	ARA	LOX	C20H30O3
39	5(S),6(R)-LXA4	ARA	LOX	C20H32O5
40	5(S),14(R)-LXB4	ARA	LOX	C20H32O5
41	14,15-LTE4	ARA	LOX	C23H37NO5S
42	8-iso-PGA2	ARA	peroxidation	C20H30O4
43	8-iso-PGE2	ARA	peroxidation	C20H32O5
44	8-iso-15-keto-PGE2	ARA	peroxidation	C20H30O5
45	8-iso-PGF2a	ARA	peroxidation	C20H34O5
46	8-iso-15-keto-PGF2a	ARA	peroxidation	C20H32O5
47	8-iso-13,14-dihydro-15-keto-PGF2a	ARA	peroxidation	C20H34O5

Tab. S3 Original data of trauma patients and controls

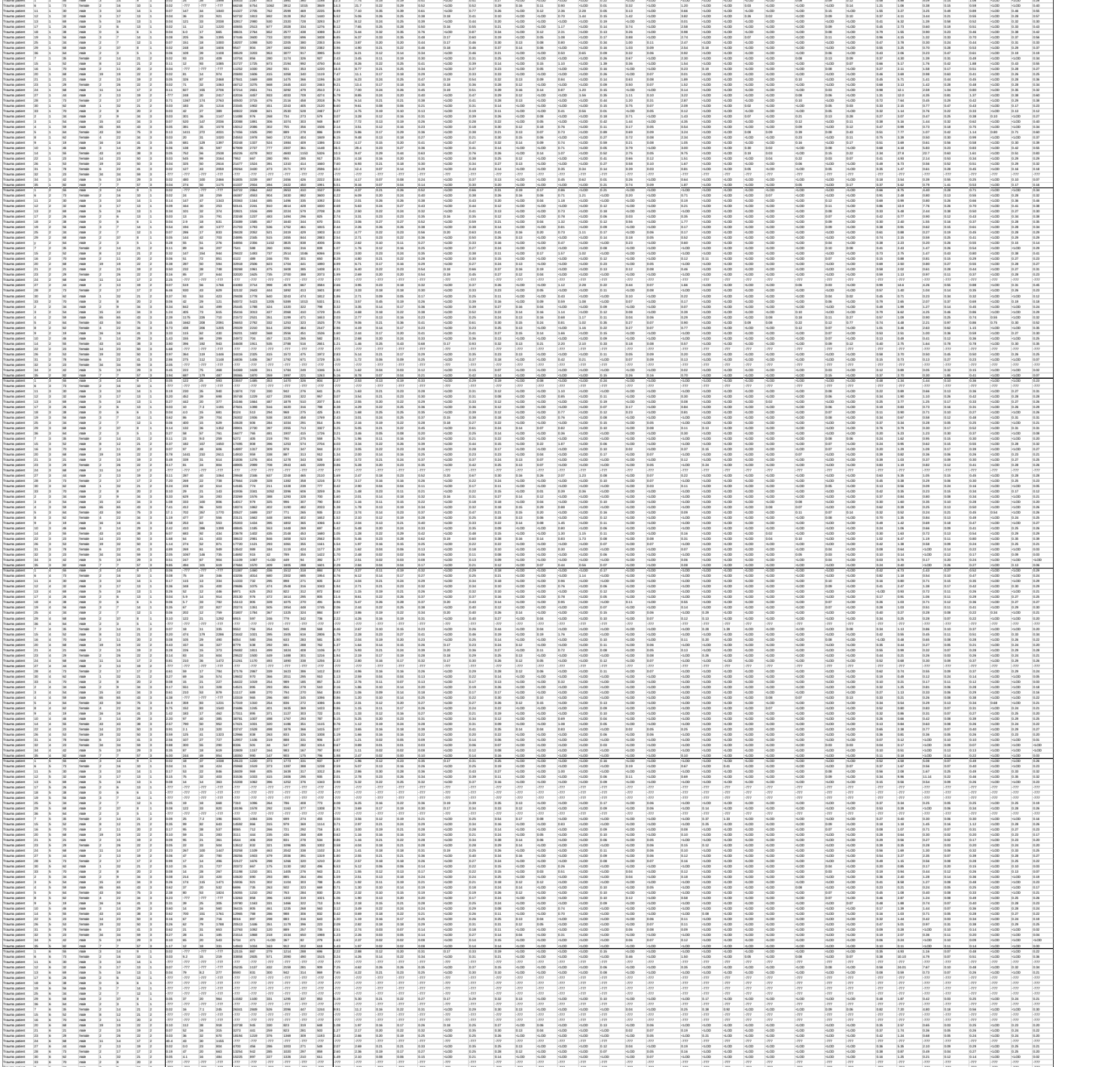

ID identification number, ICU intensive care unit, ISS injury severity score, <LOD not detected, below limit of detection, -777 sample/patient not available, n.m. not measured; n.a. not applicable