Supplementary Materials

A Novel Framework for Forest Above-Ground Biomass Inversion Using Multi-Source Remote Sensing and Deep Learning

Junxiang Zhang, Cui Zhou *, Gui Zhang, Zhigao Yang, Ziheng Pang and Yongfeng Luo

College of Forestry, Central South University of Forestry and Technology, Changsha 410004, China; 20211100024@csuft.edu.cn (J.Z.); t19861033@csuft.edu.cn (G.Z.); zgyang@126.com (Z.Y.); pang_ziheng@csuft.edu.cn (Z.P.); yfluo@csuft.edu.cn (Y.L.)
* Correspondence: cuizhou@csuft.edu.cn

Table S1 Feature extraction from the Sentinel-2 image

Vegetation Indices/ Biophysical Parameters	Acquisition Method	Reference
Atmospherically Resistant Vegetation Index (*ARVI*)	$\frac{NIR-(2\times R-B)}{NIR+(2\times R-B)}$	Zhang et al.
Enhanced Vegetation Index (*EVI*)	$\frac{2.5\times(NIR-R)}{1+NIR+6\times R-7.5\times B}$	Zhang et al.
Modified Soil Adjusted Vegetation Index (*MSAVI*)	$NIR+0.5-\sqrt{(NIR+0.5)^2-2\times(NIR-R)}$	
Modified Simple Ratio Index (*MSR*)	$\frac{\frac{NIR}{R}-1}{\sqrt{\frac{NIR}{R}+1}}$	
Normalized Difference Vegetation Index (*NDVI*)	$\frac{NIR-R}{NIR+R}$	
Optimized Soil Adjusted Vegetation Index (*OSAVI*)	$(1+0.16)\frac{NIR-R}{NIR+R+0.16}$	
Perpendicular Vegetation Index (*PVI*)	$0.939\times NIR-0.344\times R+0.09$	
Ratio Vegetation Index (*RVI*)	$\frac{NIR}{R}$	
Soil Adjusted Vegetation Index (*SAVI*)	$(1+0.5)\frac{NIR-R}{NIR+R+0.5}$	
Visible Atmospherically Resistant Index (*VARI*)	$\frac{G-R}{G+R-B}$	
Leaf Area Index (*LAI*)	Biophysical Processor S2 in SNAP	Forkuor et al.
Fraction of Vegetation Cover (*FVC*)	Biophysical Processor S2 in SNAP	
Chlorophyll Content in the Leaf (*CAB*)	Biophysical Processor S2 in SNAP	
Canopy Water Content (*CW*)	Biophysical Processor S2 in SNAP	
Fraction of Absorbed Photosynthetically Active Radiation (*FAPAR*)	Biophysical Processor S2 in SNAP	

Note: G, B, R, NIR refer to the green, blue, red, and near-infrared bands in optical imagery.

Table S2 Feature extraction from the Sentinel-1 image

Sentinel-1 data	Parameters	Reference
SLC products	Entropy (H)	Zhang et al.
	Anisotropy (A)	
	Alpha angle (alpha)	
GRD products	Backscatter coefficient σ_{vh}	Zhang et al.
	Backscatter coefficient σ_{vv}	
	Incidence angle from ellipsoid	
Two SLC images	DEM	Shashi Kumar et al.
	Phase	
	Coherence coefficient	

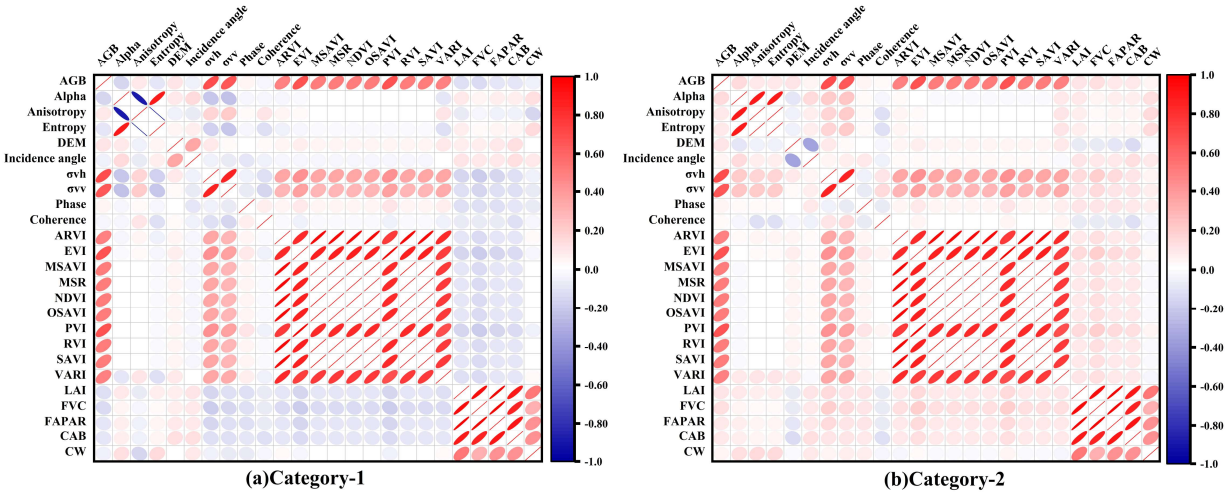

Figure S1 Heat map of absolute values for correlation coefficients between remote sensing variables and AGB in two categories: (a) Category-1; (b) Category-2.

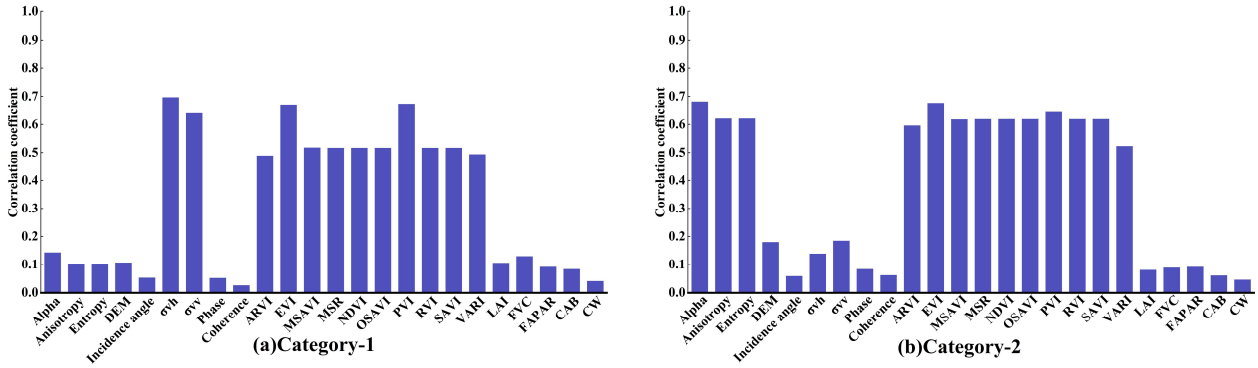

Figure S2 Histogram of absolute values for correlation coefficients between remote sensing variables and AGB in two categories: (a) Category-1; (b) Category-2.

Table S3 Newly generated COSI indices

Type	SAR Variable	Optical Variable	New Indices (COSI)
Category-1	σ_{vh}	ARVI、EVI、MSAVI、MSR、NDVI、OSAVI、PVI、RVI、SAVI、VARI、LAI、FVC	COSI1: ARVI× σ_{vh}, EVI× σ_{vh}, MSAVI× σ_{vh}, MSR× σ_{vh}, NDVI× σ_{vh}, OSAVI× σ_{vh}, PVI× σ_{vh}, RVI× σ_{vh}, SAVI× σ_{vh}, VARI× σ_{vh}, LAI× σ_{vh}, FVC× σ_{vh} (12)
			COSI2: ARVI_ σ_{vh}, EVI_ σ_{vh}, MSAVI_ σ_{vh}, MSR_ σ_{vh}, NDVI_ σ_{vh}, OSAVI_ σ_{vh}, PVI_ σ_{vh}, RVI_ σ_{vh}, SAVI_ σ_{vh}, VARI_ σ_{vh}, LAI_ σ_{vh}, FVC_ σ_{vh} (12)
	σ_{vv}	ARVI、EVI、MSAVI、MSR、NDVI、OSAVI、PVI、RVI、SAVI、VARI、LAI、FVC	COSI1: ARVI× σ_{vv}, EVI× σ_{vv}, MSAVI× σ_{vv}, MSR× σ_{vv}, NDVI× σ_{vv}, OSAVI× σ_{vv}, PVI× σ_{vv}, RVI× σ_{vv}, SAVI× σ_{vv}, VARI× σ_{vv}, LAI× σ_{vv}, FVC× σ_{vv} (12)
			COSI2: ARVI_ σ_{vv}, EVI_ σ_{vv}, MSAVI_ σ_{vv}, MSR_ σ_{vv}, NDVI_ σ_{vv}, OSAVI_ σ_{vv}, PVI_ σ_{vv}, RVI_ σ_{vv}, SAVI_ σ_{vv}, VARI_ σ_{vv}, LAI_ σ_{vv}, FVC_ σ_{vv} (12)
Category-2	Alpha	ARVI、EVI、MSAVI、MSR、NDVI、OSAVI、PVI、RVI、SAVI、VARI	COSI1: ARVI× Alpha, EVI× Alpha, MSAVI× Alpha, MSR× Alpha, NDVI× Alpha, OSAVI× Alpha, PVI× Alpha, RVI× Alpha, SAVI× Alpha, VARI× Alpha (10)
			COSI2: ARVI_ Alpha, EVI_ Alpha, MSAVI_ Alpha, MSR_ Alpha, NDVI_ Alpha, OSAVI_ Alpha, PVI_ Alpha, RVI_ Alpha, SAVI_ Alpha, VARI_ Alpha (10)
	Anisotropy(A)	ARVI、EVI、MSAVI、MSR、NDVI、OSAVI、PVI、RVI、SAVI、VARI	COSI1: ARVI× A, EVI× A, MSAVI× A, MSR× A, NDVI× A, OSAVI× A, PVI× A, RVI× A, SAVI× A, VARI× A (10)
			COSI2: ARVI_ A, EVI_ A, MSAVI_ A, MSR_ A, NDVI_ A, OSAVI_ A, PVI_ A, RVI_ A, SAVI_ A, VARI_ A (10)

Note: 12 and 10 in the parentheses denote the number of new indices generated.

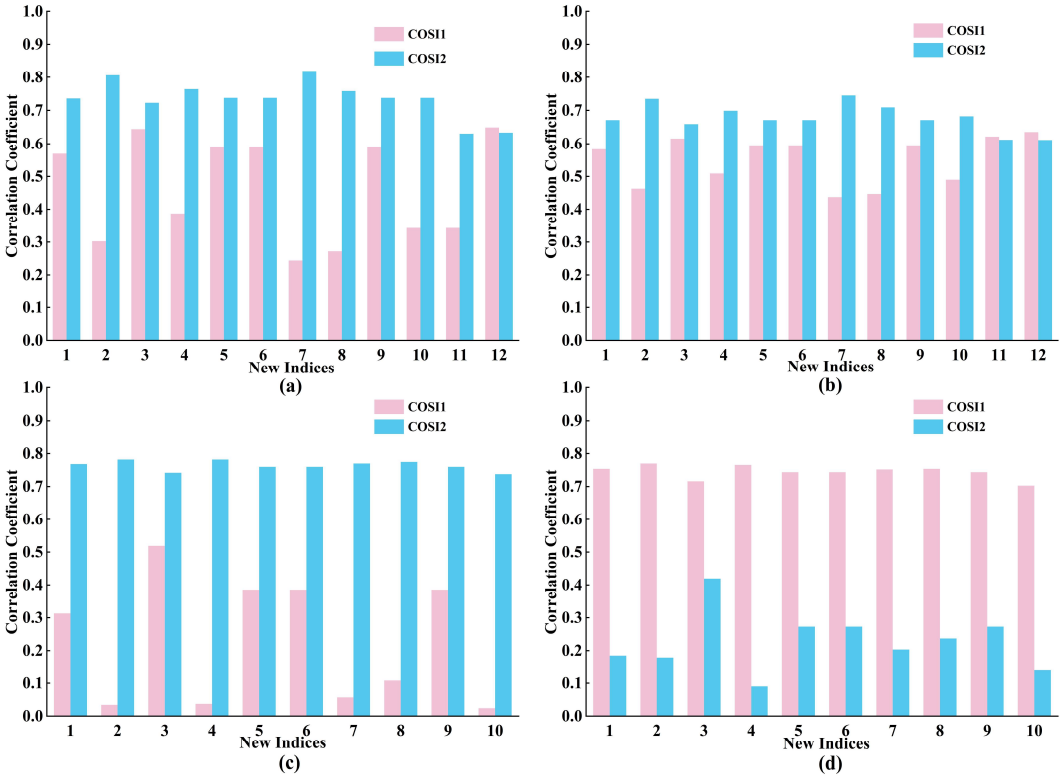

Figure S3 (a-d) The histogram of the absolute values for the correlation coefficients of the new generated indices in two categories:(a) Combined with σ_{vh} in Category-1, (b) Combined with σ_{vv} in Category-1, (c) Combined with Alpha in Category-2, (d) Combined with Anisotropy in Category-2. Note: The numbers in the horizontal coordinate represent, in turn, the new indices in Table S1.

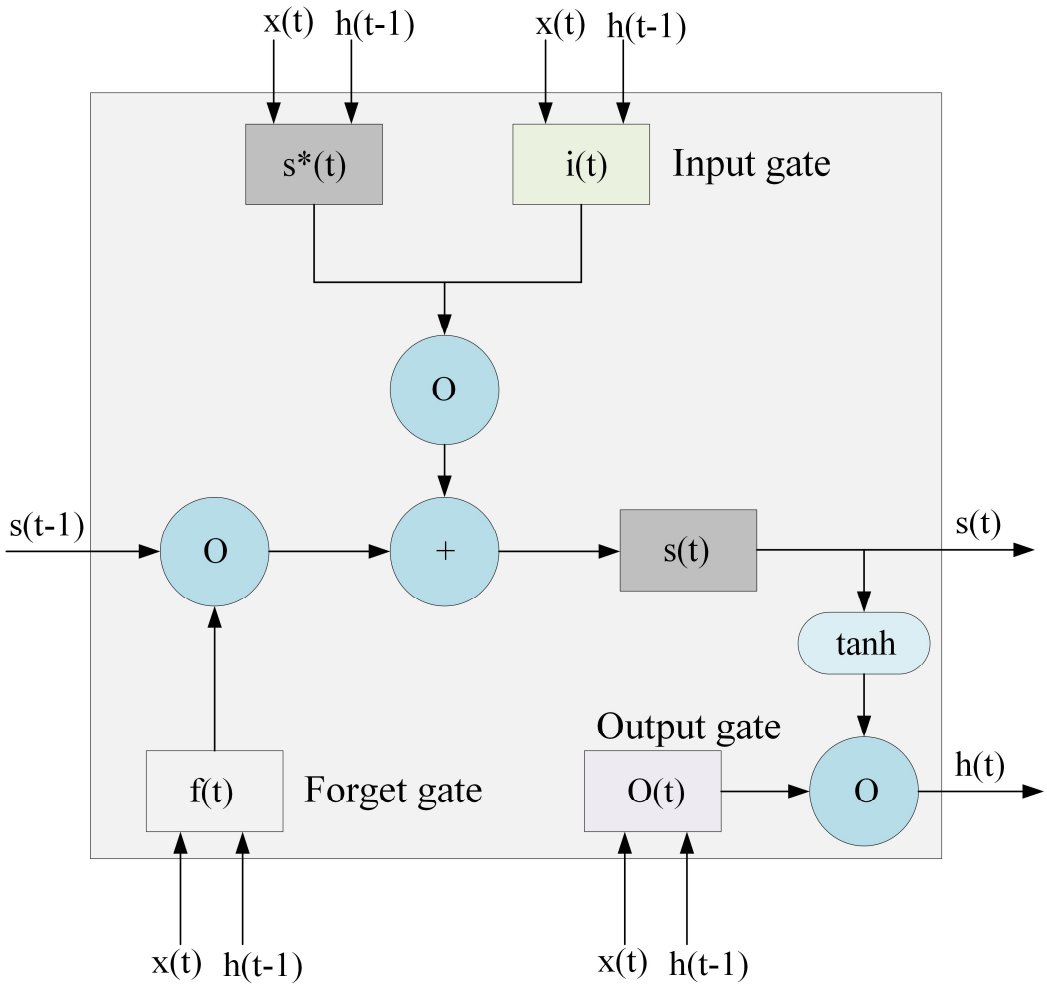

Figure S4 Construct of a single LSTM memory cell

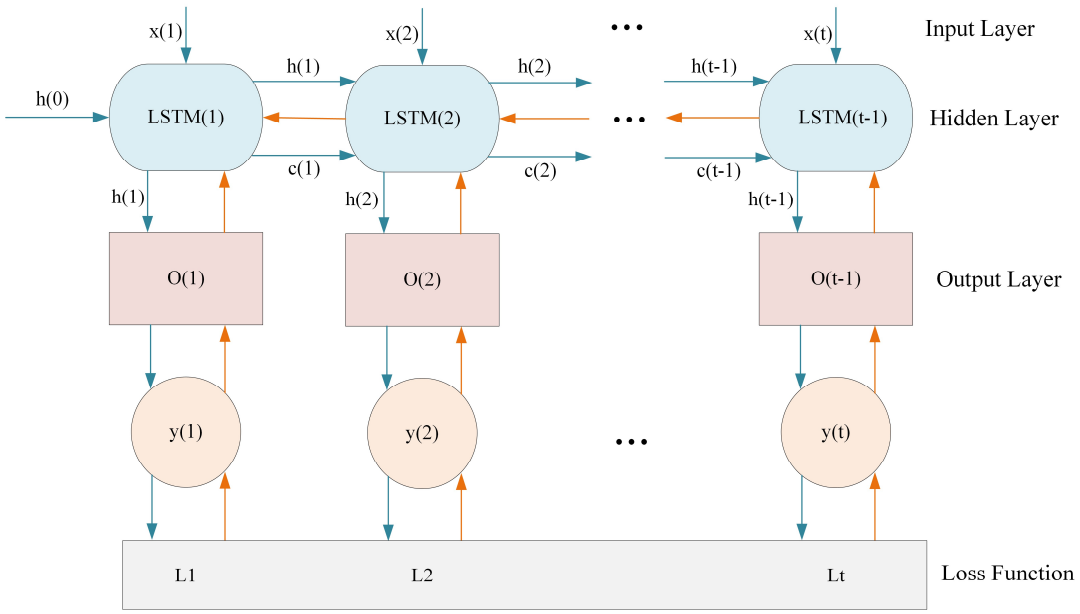

Figure S5 Training process of the LSTM

Table S4 The optimal parameters in the CIOPB framework

Method	Type	Feature Group	Initial Learn Rate	L2 Regularization	Hidden Layer Units
CIOPB	Category-1	I	0.0020	0.0006	62.1832
		II	0.0018	0.0004	75.8965
		III	0.0019	0.0006	97.5674
		IV	0.0019	0.0003	62.8198
		V	0.0017	0.0002	70.5815
	Category-2	I	0.0016	0.0001	69.4402
		II	0.0016	0.0003	99.4293
		III	0.0020	0.0001	60.7754
		IV	0.0018	0.0006	10.3438
		V	0.0014	0.0010	19.5797

Table S5. Performance of five models in all feature groups of two categories.

Method	Type	Feature Group	R^2	MAE ($Mg \cdot ha^{-1}$)	RMSE ($Mg \cdot ha^{-1}$)	$RMSE_r$ (%)	Uncertainty (ε_{total}, %)
PIO-BiLSTM	Category-1	SV	0.6097	13.8437	17.4063	25.7413	29.7257
		COSI1	0.7275	9.8412	14.5438	21.5081	26.1457
		COSI2	0.8042	**8.7933**	12.3277	18.2308	23.5236
		ACOSI	**0.8055**	8.8475	**12.2876**	**18.1715**	**23.4777**
		AVI	0.7714	9.3391	13.3197	19.6979	24.6781
	Category-2	SV	0.5293	2.6972	3.4727	14.1109	20.4968
		COSI1	0.7426	1.7872	2.5680	10.4348	18.1627
		COSI2	0.7081	1.9121	2.7345	11.1113	18.5597
		ACOSI	0.7091	2.0317	2.7300	11.0930	18.5487
		AVI	**0.7956**	**1.7103**	**2.2887**	**9.3000**	**17.5354**
BiLSTM	Category-1	SV	0.5157	14.4791	19.3889	28.6733	32.2980
		COSI1	0.6135	13.8203	17.3197	25.6133	29.6149
		COSI2	0.5844	12.6131	17.9602	26.5605	30.4378
		ACOSI	**0.6407**	**11.4658**	**16.6998**	**24.6965**	**28.8256**
		AVI	0.6009	12.8221	17.6018	26.0305	29.9764
	Category-2	SV	0.4588	2.5389	3.7236	15.1304	21.2115
		COSI1	0.5802	2.8404	3.2794	13.3255	19.9642
		COSI2	0.5459	2.8109	3.4108	13.8594	20.3244
		ACOSI	0.5253	2.3433	3.4873	14.1703	20.5377
		AVI	**0.6154**	**2.2621**	**3.1392**	**12.7558**	**19.5885**
LSTM	Category-1	SV	0.4703	16.8043	20.2771	29.9868	33.4695
		COSI1	0.6035	12.5151	17.5432	25.9438	29.9012
		COSI2	0.5336	13.0903	19.0270	28.1381	31.8238
		ACOSI	**0.6194**	**13.0287**	**17.1868**	**25.4166**	**29.4449**
		AVI	0.5878	13.1069	17.8870	26.4522	30.3433
	Category-2	SV	0.4758	3.0038	3.6646	14.8907	21.0412
		COSI1	0.5703	2.3058	3.3180	13.4823	20.0692
		COSI2	0.5181	**2.0068**	3.5137	14.2775	20.6118
		ACOSI	0.5042	2.4906	3.5639	14.4815	20.7536
		AVI	**0.5955**	2.1561	**3.2193**	**13.0812**	**19.8020**
RF	Category-1	SV	0.4228	15.3063	21.0563	31.1391	34.5057
		COSI1	0.5240	14.7531	19.2224	28.4271	32.0796
		COSI2	0.4959	16.2024	19.7818	29.2544	32.8149
		ACOSI	**0.5551**	**13.1109**	**18.5823**	**27.4805**	**31.2438**
		AVI	0.5414	14.7462	18.8673	27.9020	31.6152
	Category-2	SV	0.4041	2.8867	4.2072	17.0955	22.6552
		COSI1	0.4848	2.7399	3.9331	15.9817	21.8269
		COSI2	0.5051	2.8330	3.8608	15.6879	21.6127
		ACOSI	0.4442	2.8995	4.0734	16.5518	22.2477
		AVI	**0.5099**	**2.4915**	**3.5434**	**14.3982**	**20.6956**
SVR	Category-1	SV	0.4053	16.7147	21.4843	31.7721	35.0780
		COSI1	0.5192	16.4032	19.3191	28.5701	32.2064
		COSI2	0.5162	**14.8050**	19.3781	28.6573	32.2838
		ACOSI	**0.5228**	15.3151	**19.2453**	**28.4610**	**32.1096**
		AVI	0.4942	15.6670	19.8146	29.3029	32.8582
	Category-2	SV	0.3377	2.9318	4.6193	18.7700	23.9440
		COSI1	0.4467	2.9458	4.1149	16.7204	22.3735
		COSI2	0.4445	2.9797	4.1224	16.7509	22.3963
		ACOSI	0.3802	3.1208	4.3347	17.6136	23.0486
		AVI	**0.4632**	**2.6754**	**4.0584**	**16.4909**	**22.2025**

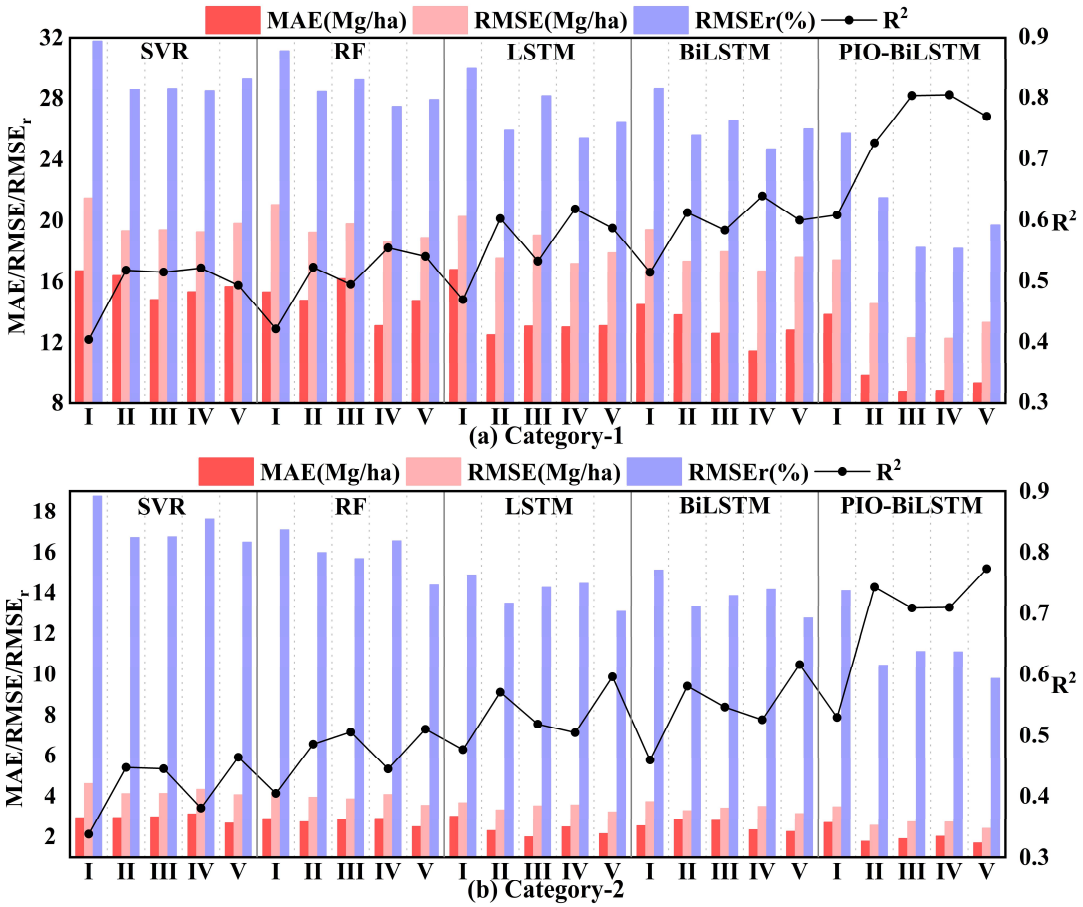

Figure S6 Comparison of model evaluation metrics using the SVR, RF, LSTM, BiLSTM, and the PIO-BiLSTM in two categories: (a) Category-1; (b) Category-2.