Design of a sensory device for the characterisation of the VOCs fingerprint in the breath of dairy cattle

Simone Giovinazzo, Elio Romano, Carlo Bisaglia, Aldo Calcante, Ezio Naldi, Roberto Oberti, Alex Filisetti, Gianluigi Rozzoni and Massimo Brambilla

SUPPLEMENTARY MATERIALS

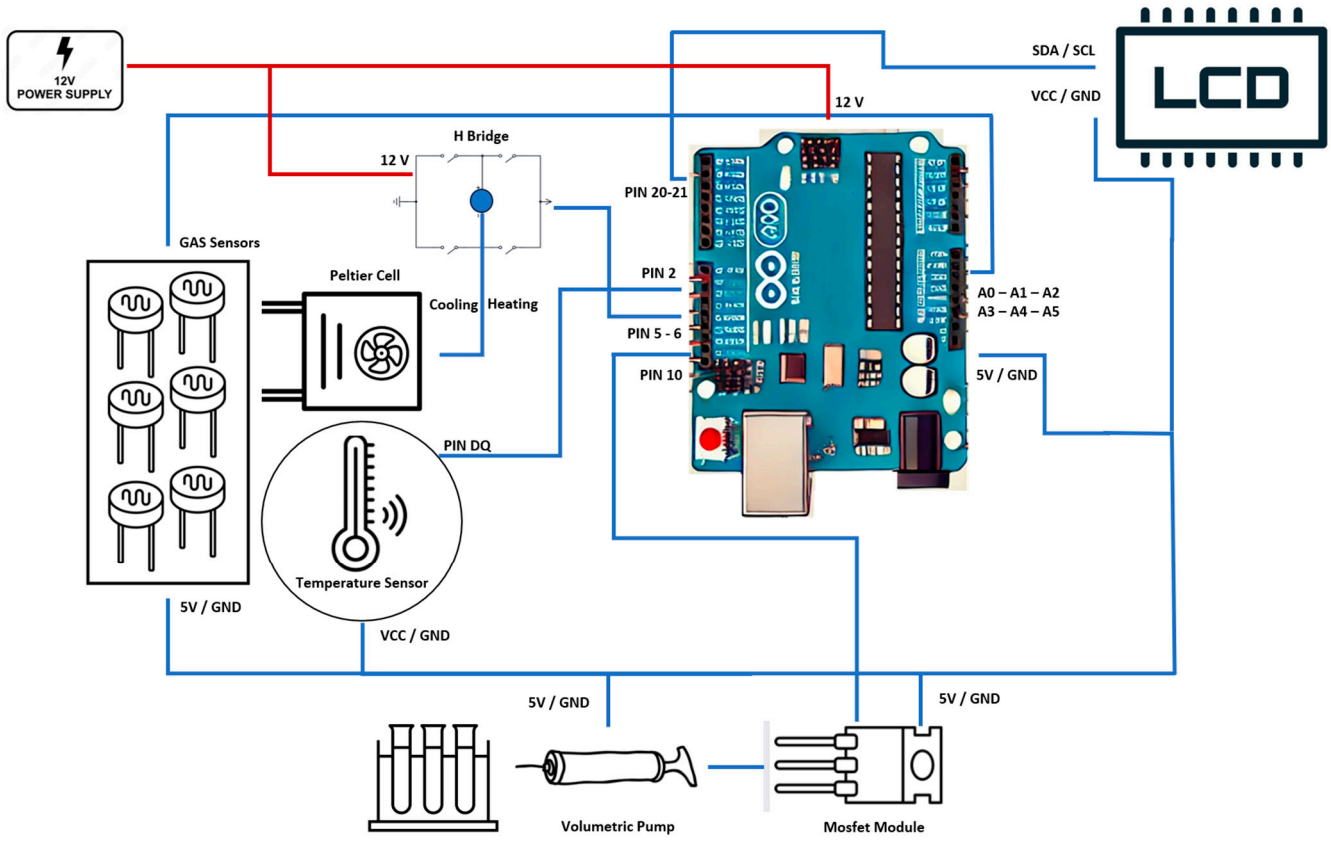

Figure S1 Diagram of the electronic nose architecture: organisation and interconnection of key components.