geometry

MDPI

Article

Translative Covering a Square with Isosceles Right Triangles

Janusz Januszewski and Łukasz Zielonka *

Department of Mathematics, Bydgoszcz University of Science and Technology, Al. Prof. S. Kaliskiego 7, 85-789 Bydgoszcz, Poland; januszew@pbs.edu.pl

* Correspondence: lukasz.zielonka@pbs.edu.pl

Abstract

A translative covering the rectangle $a \times b$ with homothetic copies of a right isosceles triangle T (of the legs parallel to the sides of $a \times b$) is considered. It is shown that any collection of equal triangles homothetic to T with the total area at least 2 permits a translative covering of 1×1; this bound is tight. It is also demonstrated that any collection of positive homothetic copies of T with the total area at least 3 permits a translative covering of 1×1. Moreover, it is proven that if $a \geq \frac{5+\sqrt{33}}{4} b$, then any collection of triangles homothetic to T with the total area at least $\frac{1}{2}(a+b)^2$ permits a translative covering of $a \times b$; this bound is tight.

Keywords: covering; translative covering; triangle; rectangle

MSC: 52C15

1. Introduction

A collection (a sequence) $C_1, C_2, \ldots$ of planar convex bodies *permits a covering* of a planar convex body D, if the sets $C_1, C_2, \ldots$ can *cover* D, i.e., if it is possible to apply translations and rotations to the sets C_n $(n = 1, 2, \ldots)$, then the resulting translated and rotated bodies C_n' cover D, i.e., $D \subseteq \bigcup C_n'$. If we use only translations, then we get a *translative covering*.

It is known that any collection of squares whose total area is not smaller than 3 permits a translative covering of a unit square (see [1–3]). If rotations are allowed, then the lower bound 3 can be reduced to 2 (see [4]). It is also known [5] that any collection of homothetic copies of a triangle $\mathcal{T}$ whose total area is not smaller than two times the area of $\mathcal{T}$ permits a translative covering of $\mathcal{T}$. All these bounds are tight.

Let T be a right isosceles triangle and let I be the unit square with the sides parallel to the legs of T. Song and Su [6] proved that any collection of positive homothetic copies of T with the total area not smaller than 2 permits a covering of I. The generalization of this result for the covering rectangles is given in [7]. The lower bound 2 presented in [6] is tight. However, both translations and 180° rotations are used for the covering. In this note, we do not use rotations. We are not able to generalize this result for the covering I with unequal triangles, but we are able to obtain the tight lower bound for the covering I with equal triangles, as well as for the covering of some rectangles with unequal triangles.

In Section 2 we will show that any collection of congruent triangles homothetic to T with the total area not smaller than 2 permits a translative covering of I; this lower bound is tight.

In Section 3, we will prove that any collection of positive homothetic copies T with the total area not smaller than 3 can translatively cover I; it is very likely that this lower bound is not tight.

Check for updates

Academic Editor: Egon Schulte

Received: 4 November 2025
Revised: 17 March 2026
Accepted: 7 April 2026
Published: 13 April 2026

Copyright: © 2026 by the authors. Licensee MDPI, Basel, Switzerland. This article is an open access article distributed under the terms and conditions of the Creative Commons Attribution (CC BY) license.

Let $R = a \times b$ be a rectangle of sidelengths a and b, with the sides parallel to the legs of T. In Section 4 we will show that if $a \geq \frac{5+\sqrt{33}}{4} b$, then any collection of positive homothetic copies of T with the total area not smaller than $\frac{1}{2}(a+b)^2$ permits a translative covering of R; this lower bound is tight.

2. Translative Covering a Square with Equal Triangles

Lemma 1. *Two congruent right isosceles triangles with legs of length $a > 0$ can cover the rectangle $\lambda \times \left(\frac{3}{2}a - \lambda\right)$ for $\frac{1}{2}a \leq \lambda \leq a$.*

Proof. Let $\lambda \in \left[\frac{1}{2}a, a\right]$ and let T_a^1, T_a^2 be right isosceles triangles with legs of length a. Moreover, let T_a^2 be the image of T_a^1 under the translation by the vector $\left(\lambda - \frac{1}{2}a, a - \lambda\right)$. Then the triangles T_a^1 and T_a^2 cover the rectangle $\lambda \times \left(\frac{3}{2}a - \lambda\right)$ (see Figure 1). □

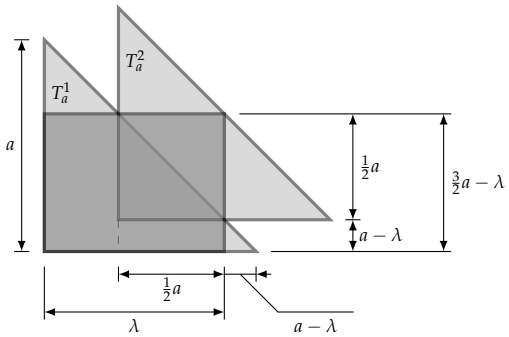

Figure 1. The rectangle covered with two equal right isosceles triangles.

Lemma 2. *The right isosceles triangle with legs of length $a > 0$ can cover the rectangle $\mu \times (a - \mu)$ for $0 < \mu < a$.*

Proof. Let T be a right isosceles triangle with legs of length a. Consider a rectangle R with side lengths μ and $a - \mu$, where $0 < \mu < a$. Place T in such a way that its right-angle vertex coincides with a vertex of R, and the legs of T contain the two sides of R incident with that vertex (see Figure 2).

Two vertices of the rectangle lie on the legs of T at distances μ and $a - \mu$ from the right-angle vertex; since $0 < \mu < a$, these points are not the endpoints of the legs. The fourth vertex of R lies on the hypotenuse of T, since the sum of the lengths of the sides of R adjacent to this vertex is $\mu + (a - \mu) = a$, which equals the length of the legs of T.

Hence, the entire rectangle R is contained in T. Therefore the triangle T covers the rectangle $\mu \times (a - \mu)$. □

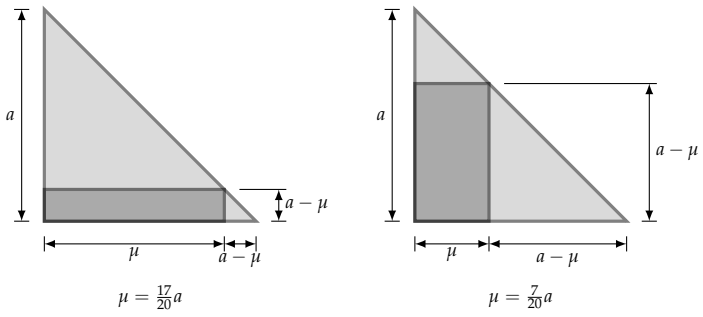

Figure 2. The rectangle covered with the right isosceles triangle.

For covering with one triangle, we take $\mu = 1$ and $a = 2$ in Lemma 2.

Remark 1. *A single triangle of area 2 (i.e., with $a = 2$) can cover I.*

It is clear that the number 2 cannot be replaced here by any smaller one. Therefore, the lower bound 2 presented in Theorem 1 is tight.

For covering with two equal triangles, we take $\lambda = \frac{3}{4}a$ and $a = \frac{4}{3}$ in Lemma 1.

Corollary 1. *Two congruent right isosceles triangles with legs of length $a > 0$ can cover the square with the sidelength $\frac{3}{4}a$.*

Corollary 2. *Two congruent right isosceles triangles with legs of length $\frac{4}{3}$ (with the total area $2 \cdot \frac{1}{2} \cdot \left(\frac{4}{3}\right)^2 = \frac{16}{9}$) can cover the unit square I.*

The covering with three and four equal triangles is presented in Figures 3 and 4.

Remark 2. *Three congruent right isosceles triangles with legs of length $\frac{8}{7}$ (with the total area $3 \cdot \frac{1}{2} \cdot \left(\frac{8}{7}\right)^2 = \frac{96}{49}$) can cover the unit square I.*

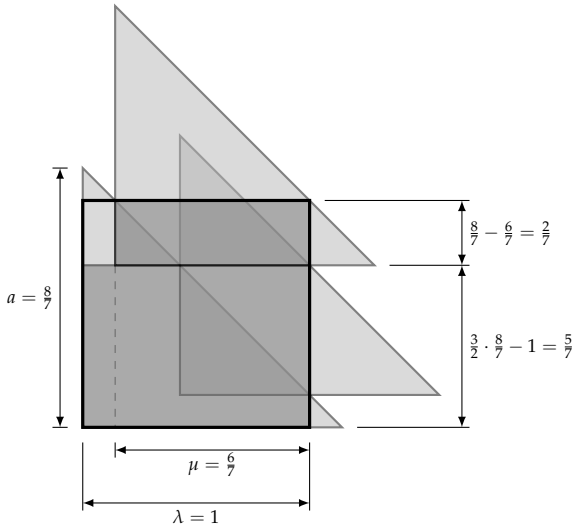

Figure 3. The unit square covered with three right isosceles triangles with legs of length $\frac{8}{7}$.

Remark 3. *Four congruent right isosceles triangles with legs of length 1 (with the total area $4 \cdot \frac{1}{2} \cdot 1^2 = 2$) can cover the unit square I.*

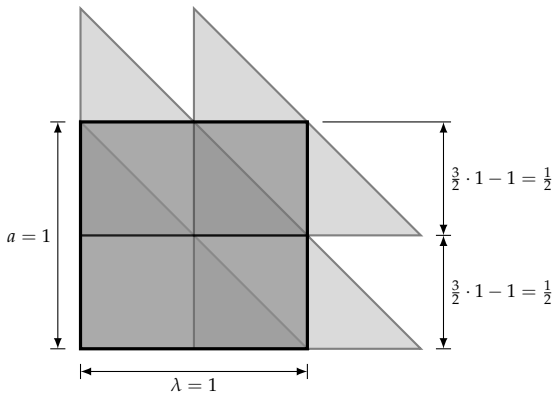

Figure 4. The unit square covered with four right isosceles triangles with legs of length 1.

Theorem 1. *Any collection of n congruent triangles ($n = 1, 2, \ldots$) homothetic to T with the total area not smaller than 2 permits a translative covering of I.*

https://doi.org/10.3390/geometry3020008

Proof. Consider a collection of n congruent triangles T_a, each homothetic to T, with the total area not smaller than 2 and let a denote the length of the legs of T_a. Since the area of one triangle is equal to $\frac{1}{2}a^2$, the condition $n \cdot \frac{1}{2}a^2 \geq 2$ implies that

$$a \geq \frac{2}{\sqrt{n}}.$$

If $n \in \{1,2,3,4\}$, a collection of n triangles with the total area 2 can cover I (see Remark 1, Corollary 2 and Remarks 2 and 3).

Assume that $n > 4$.

In the covering process, we will first cover the square with an appropriate family of rectangles. Then, the triangles from the collection will be placed in such a way that they cover these rectangles.

In Figures 5–12, any rectangle with a marked diagonal will be covered with two triangles (as in Lemma 1), and any rectangle without a marked diagonal will be covered with a single triangle (as in Lemma 2). For example, in Figure 5, left, the square of sidelength $\frac{3}{4}a$ will be covered with two triangles, while the square of sidelength $2 - \frac{7}{4}a$ will be covered with one triangle.

In many cases, we will use one of the following two methods.

In the method $M_1(k)$ (for example, see Figure 6, middle, where $k = 2$) the unit square is covered with k^2 rectangles of sidelengths $\frac{1}{k}$ and $\frac{3}{2}a - \frac{1}{k}$ and with $n - 2k^2$ rectangles of sidelengths $1 - k(\frac{3}{2}a - \frac{1}{k}) = 2 - \frac{3}{2}ka$ and $\frac{1}{n-2k^2}$. By Lemma 1 (we take $\lambda = \frac{1}{k}$), each rectangle $\frac{1}{k} \times \left(\frac{3}{2}a - \frac{1}{k}\right)$ can be covered with two triangles T_a. Moreover, by Lemma 2 (we take $\mu = 2 - \frac{3}{2}ka$), the rectangle $(2 - \frac{3}{2}ka) \times (\frac{1}{n-2k^2})$ can be covered with T_a, if

$$a - (2 - \frac{3}{2}ka) \geq \frac{1}{n - 2k^2}.$$

Obviously, $a \geq \frac{2}{\sqrt{n}}$. Consequently, to check that the triangles can cover I it suffices to show that

$$\lambda_1(n,k) \geq 0,$$

where

$$\lambda_1(n,k) = \frac{2}{\sqrt{n}}(1 + \frac{3}{2}k) - 2 - \frac{1}{n - 2k^2}.$$

We will verify this inequality in Cases 4 and 9.

In the method $M_2(k)$ (for example, see Figure 5, middle and right, where $k = 2$) the unit square is covered with $k \cdot (k-1)$ rectangles of sidelengths $\frac{1}{k}$ and $\frac{3}{2}a - \frac{1}{k}$ and with $n - 2k(k-1)$ rectangles of sidelengths $1 - (k-1)(\frac{3}{2}a - \frac{1}{k})$ and $\frac{1}{n-2k(k-1)}$. By Lemma 1, each rectangle $\frac{1}{k} \times \left(\frac{3}{2}a - \frac{1}{k}\right)$ can be covered with two triangles T_a (we take $\lambda = \frac{1}{k}$). Moreover, by Lemma 2 (we take $\mu = 1 - (k-1)(\frac{3}{2}a - \frac{1}{k})$), the rectangle $\left(1 - (k-1)(\frac{3}{2}a - \frac{1}{k})\right) \times \frac{1}{n-2k(k-1)}$ can be covered with T_a, provided that

$$a - \left(1 - (k-1)(\frac{3}{2}a - \frac{1}{k})\right) \geq \frac{1}{n - 2k(k-1)}.$$

Consequently, to check that the triangles can cover I, it suffices to show that

$$\lambda_2(n,k) \geq 0,$$

where

$$\lambda_2(n,k) = \frac{2}{\sqrt{n}}\left(\frac{3}{2}k - \frac{1}{2}\right) + \frac{1}{k} - 2 - \frac{1}{n-2k(k-1)}.$$

We will verify this inequality in Cases 2, 6, and 9.

Consider ten cases depending on the number of triangles in the collection.

Case 1: $n = 5$. We cover I with four rectangles as shown in Figure 5, left. Now, we check that five triangles T_a, for $a \geq \frac{2}{\sqrt{5}}$, can cover these rectangles. According to Corollary 1, two triangles T_a can cover a square of sidelength $\frac{3}{4}a$. Since $\frac{7}{4}a - 1 = a - \left(1 - \frac{3}{4}a\right)$, by Lemma 2, a rectangle of size $\left(1 - \frac{3}{4}a\right) \times \left(\frac{7}{4}a - 1\right)$ can be covered with a single triangle T_a. Thus, we cover two such rectangles with two triangles T_a. Moreover, by taking $\mu = \frac{1}{2}a$ in Lemma 2, we conclude that T_a can cover a square of sidelength $\frac{1}{2}a$. It is easy to verify that $2 - \frac{7}{2}a \leq \frac{1}{2}a \quad \text{for} \quad a \geq \frac{2}{\sqrt{5}}$. Therefore, a square of sidelength $2 - \frac{7}{2}a$ can be covered with T_a.

Case 2: $n \in \{6,7\}$. We use the method $M_2(2)$ (see Figure 5, middle and right). It is easy to verify that

$$\lambda_2(n,2) = \frac{2}{\sqrt{n}}\left(3 - \frac{1}{2}\right) + \frac{1}{2} - 2 - \frac{1}{n-4} > 0.$$

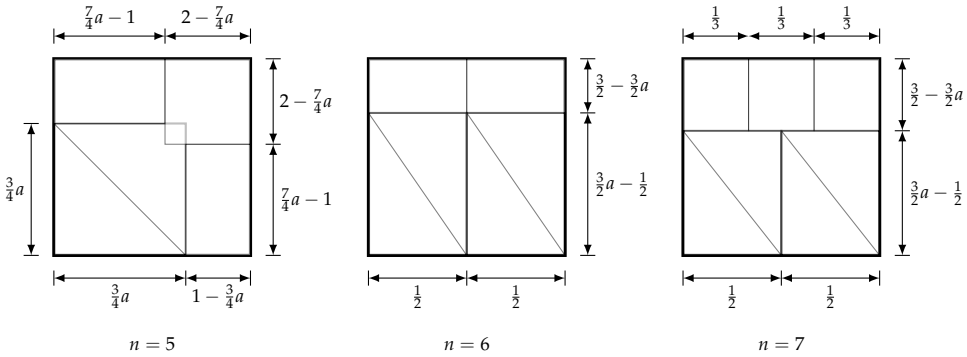

Figure 5. $n \in \{5,6,7\}$.

Case 3: $n \in \{8,9\}$. We cover the square with four equal squares, as shown in Figure 6, left. Clearly,

$$8 \cdot \frac{1}{2}\left(\frac{3}{4}a\right)^2 \geq 4 \cdot \frac{9}{16} \cdot \left(\frac{2}{\sqrt{n}}\right)^2 = \frac{9}{n} \geq 1, \quad \text{for} \quad n \in \{8,9\}.$$

By Corollary 1 these rectangles can be covered with eight triangles T_a.

Case 4: $10 \leq n \leq 13$. We use the method $M_1(2)$ (see Figure 6, middle, where $n = 13$). It is easy to verify that

$$\lambda_1(n,2) = \frac{2}{\sqrt{n}}(1+3) - 2 - \frac{1}{n-8} > 0.$$

Case 5: $n = 14$ (see Figure 6, right). Since $(2 - 3a) < a - \frac{1}{3}$ for $a \geq \frac{2}{\sqrt{14}}$, the rectangle of size $\frac{1}{3} \times (2 - 3a)$ can be covered with two triangles T_a.

Case 6: $15 \leq n \leq 19$. We use the method $M_2(3)$ (see Figure 7, left). It is easy to verify that

$$\lambda_2(n,3) = \frac{2}{\sqrt{n}}\left(\frac{9}{2} - \frac{1}{2}\right) + \frac{1}{3} - 2 - \frac{1}{n-12} > 0.$$

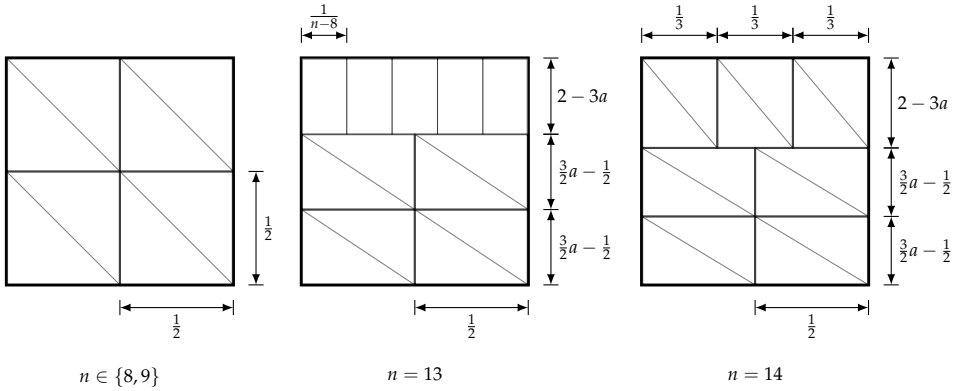

Figure 6. $8 \leq n \leq 14$.

Case 7: $20 \leq n \leq 22$. See Figure 7, middle. By

$$\frac{3}{2}a - \frac{1}{4} \geq \frac{5}{3} - 3a, \quad \text{for} \quad a \geq \frac{2}{\sqrt{n}} \geq \frac{2}{\sqrt{22}},$$

six rectangles $\frac{1}{2} \times \left(\frac{3}{2}a - \frac{1}{2}\right)$ and four rectangles $\frac{1}{4} \times \left(\frac{5}{3} - 3a\right)$ can be covered with 20 triangles T_a.

Case 8: $23 \leq n \leq 29$, see Figure 7, right. By

$$a - \left(\frac{23}{12} - \frac{9}{2}a\right) = \frac{11}{2}a - \frac{23}{12} \geq \frac{11}{\sqrt{n}} - \frac{23}{12} \geq \frac{1}{n-20}, \quad \text{for} \quad 23 \leq n \leq 29,$$

I can be covered with n triangles T_a.

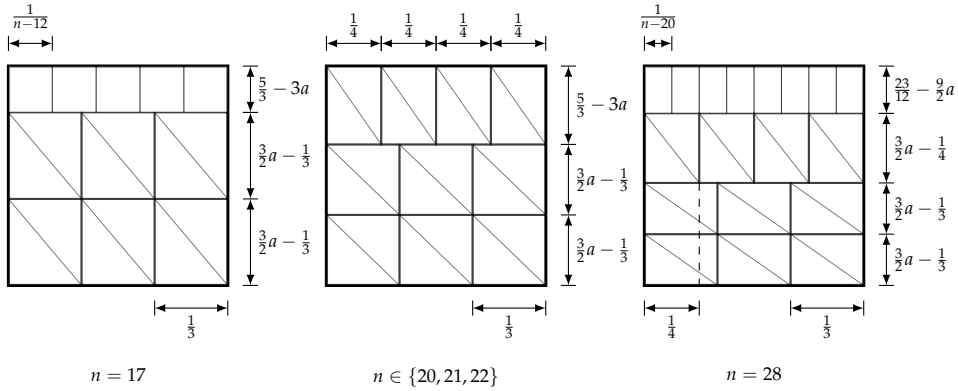

Figure 7. $15 \leq n \leq 29$.

Case 9: $30 \leq n \leq 205$.

If $30 \leq n \leq 35$ (see Figure 8, left), then we use method $M_2(4)$:

$$\lambda_2(n,4) = \frac{2}{\sqrt{n}}\left(6 - \frac{1}{2}\right) + \frac{1}{4} - 2 - \frac{1}{n-24} \geq 0.$$

If $36 \leq n \leq 45$ (see Figure 8, middle), then we use $M_1(4)$:

$$\lambda_1(n,4) = \frac{2}{\sqrt{n}}(1+6) - 2 - \frac{1}{n-32} > 0.$$

If $46 \leq n \leq 56$ (see Figure 8, right), then we use $M_2(5)$:

$$\lambda_2(n,5) = \frac{2}{\sqrt{n}}\left(\frac{15}{2} - \frac{1}{2}\right) + \frac{1}{5} - 2 - \frac{1}{n-40} > 0.$$

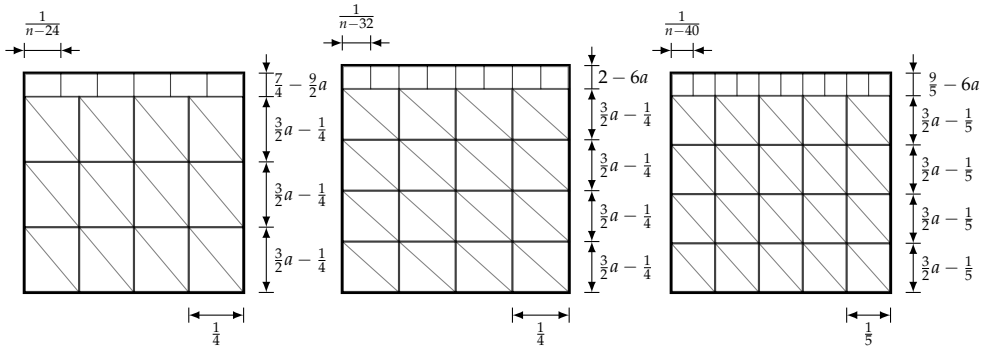

Figure 8. $30 \leq n \leq 56$.

If $57 \leq n \leq 68$ (see Figure 9, left), we use $M_1(5)$:

$$\lambda_1(n,5) = \frac{2}{\sqrt{n}}(1+\frac{15}{2}) - 2 - \frac{1}{n-50} > 0.$$

If $69 \leq n \leq 81$ (see Figure 9, middle), we use $M_2(6)$:

$$\lambda_2(n,6) = \frac{2}{\sqrt{n}}(9-\frac{1}{2}) + \frac{1}{6} - 2 - \frac{1}{n-60} > 0.$$

If $82 \leq n \leq 95$ (see Figure 9, right), we use $M_1(6)$:

$$\lambda_1(n,6) = \frac{2}{\sqrt{n}}(1+9) - 2 - \frac{1}{n-72} > 0.$$

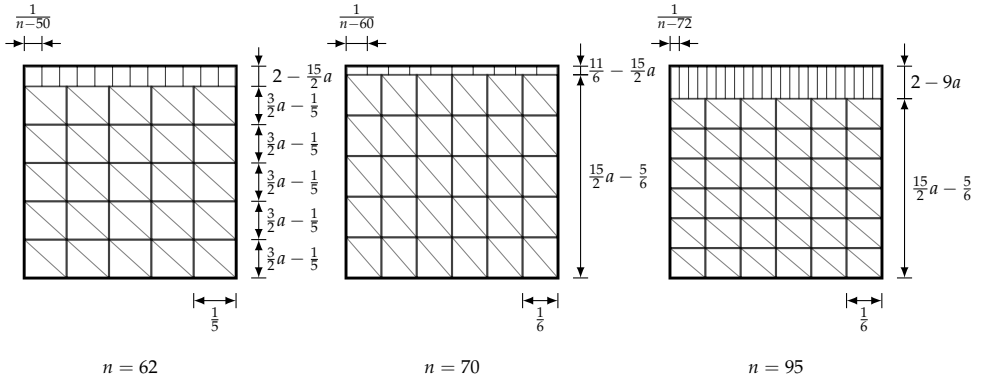

Figure 9. $57 \leq n \leq 95$.

If $96 \leq n \leq 111$ (see Figure 10, left), we use $M_2(7)$:

$$\lambda_2(n,7) = \frac{2}{\sqrt{n}}(\frac{21}{2}-\frac{1}{2}) + \frac{1}{7} - 2 - \frac{1}{n-84} > 0.$$

If $112 \leq n \leq 127$ (see Figure 10, middle), we use the method $M_1(7)$:

$$\lambda_1(n,7) = \frac{2}{\sqrt{n}}(1+\frac{21}{2}) - 2 - \frac{1}{n-98} > 0.$$

If $128 \leq n \leq 145$ (see Figure 10, right), we use $M_2(8)$:

$$\lambda_2(n,8) = \frac{2}{\sqrt{n}}(12-\frac{1}{2}) + \frac{1}{8} - 2 - \frac{1}{n-112} > 0.$$

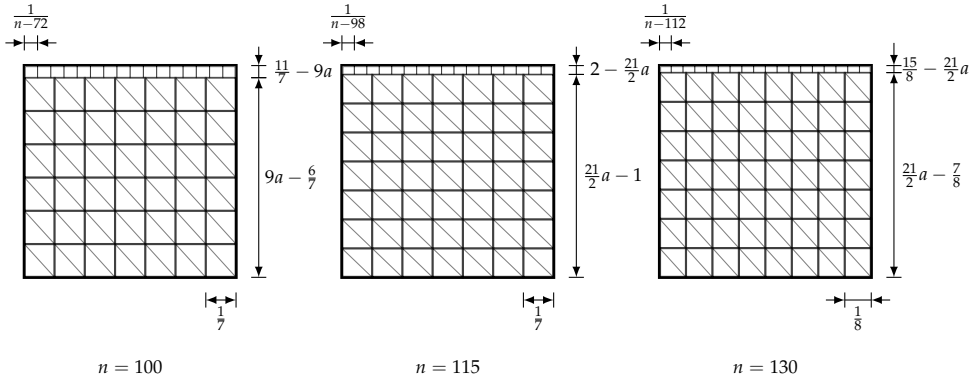

Figure 10. $96 \leq n \leq 145$.

If $146 \leq n \leq 164$ (see Figure 11, left), we use $M_1(8)$:

$$\lambda_1(n,8) = \frac{2}{\sqrt{n}}(1+12) - 2 - \frac{1}{n-128} > 0.$$

If $165 \leq n \leq 184$ (see Figure 11, middle), we use $M_2(9)$:

$$\lambda_2(n,9) = \frac{2}{\sqrt{n}}\left(\frac{27}{2} - \frac{1}{2}\right) + \frac{1}{9} - 2 - \frac{1}{n-144} > 0.$$

Finally, if $185 \leq n \leq 205$ (see Figure 11, right), we use $M_1(9)$:

$$\lambda_1(n,9) = \frac{2}{\sqrt{n}}\left(1 + \frac{27}{2}\right) - 2 - \frac{1}{n-162} > 0.$$

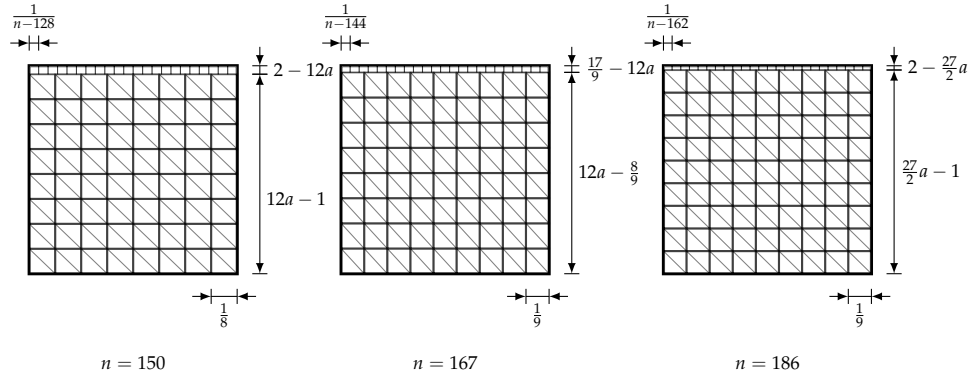

Figure 11. $146 \leq n \leq 205$.

Case 10: $n \geq 206$. Clearly, for any $a > 0$ there is an integer m such that

$$\frac{1}{m+1} < \frac{3}{4}a \leq \frac{1}{m}, \quad \text{i.e.,} \quad \frac{4}{3} \cdot \frac{1}{m+1} < a \leq \frac{4}{3} \cdot \frac{1}{m}.$$

Note that

$$\frac{4}{3} \cdot \frac{1}{m+1} < \frac{2}{3} \cdot \frac{2m+1}{m(m+1)} \leq \frac{4}{3} \cdot \frac{1}{m}.$$

Subcase 10.1: $\frac{2}{3} \cdot \frac{2m+1}{m(m+1)} < a \leq \frac{4}{3} \cdot \frac{1}{m}$. It is easy to check that

$$\frac{1}{m} \cdot \left(\frac{3}{2}a - \frac{1}{m}\right) > 1, \quad \text{for} \quad a > \frac{2}{3} \cdot \frac{2m+1}{m(m+1)}.$$

https://doi.org/10.3390/geometry3020008

This implies that I can be covered with $m \cdot (m+1)$ rectangles of size $\frac{1}{m} \times \left(\frac{3}{2}a - \frac{1}{m}\right)$ (as shown in Figure 12, left, where $m = 10$ and $a = \frac{2}{\sqrt{235}}$). Each such rectangle can be covered with two triangles T_a (we take $\lambda = \frac{1}{m}$ in Lemma 1). Consequently, I can be covered with $2m(m+1)$ triangles T_a and to prove that I can be covered with n triangles T_a it suffices to check that $n \geq 2m(m+1)$. Observe that

$$m(m+1)a^2 < m(m+1) \cdot \left(\frac{4}{3} \cdot \frac{1}{m}\right)^2 = \frac{16}{9} \cdot \frac{m+1}{m} \leq 2 \quad \text{for} \quad m \geq 8.$$

Since $n \cdot \frac{1}{2}a^2 \geq 2$ (the total area of the triangles is not smaller than 2), it follows that $n > 2m(m+1)$.

Subcase 10.2: $\frac{4}{3} \cdot \frac{1}{m+1} < a \leq \frac{2}{3} \cdot \frac{2m+1}{m(m+1)}$. We cover I with $(m+1) \cdot (m+1)$ squares of sidelength $\frac{1}{m+1}$ (as illustrated in Figure 12, right, where $m = 9$). By Corollary 1, each such square can be covered with two triangles T_a (in our subcase $\frac{3}{4}a > \frac{1}{m+1}$). Consequently, I can be covered with $2(m+1)^2$ triangles T_a. Observe that

$$(m+1)^2a^2 \leq (m+1)^2 \cdot \frac{4}{9} \cdot \frac{(2m+1)^2}{m^2(m+1)^2} = \frac{4}{9} \cdot \left(\frac{2m+1}{m}\right)^2 \leq 2 \quad \text{for} \quad m \geq 9.$$

Since $n \cdot \frac{1}{2}a^2 \geq 2$, it follows that $n \geq 2(m+1)^2$. Consequently, I can be covered with n triangles T_a. □

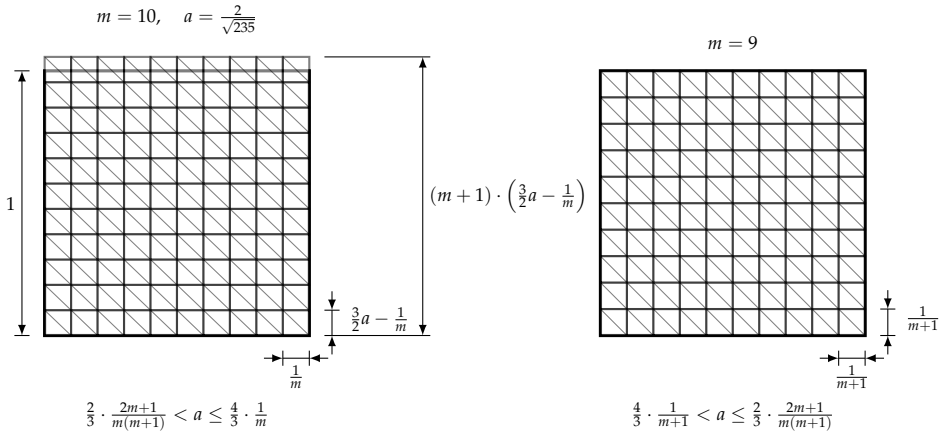

Figure 12. $n \geq 206$.

3. Translative Covering a Square with Unequal Triangles

By an s-rectangle we mean a rectangle $c \times d$, where $d \in \{1, 1/2, 1/4, 1/8, 1/16, \ldots, \}$.

Lemma 3. *Any right isosceles triangle T_r of legs of length not greater than 2 contains an s-rectangle of the area equal to $4/9$ times the area of T_r.*

Proof. Let k be a non-negative integer such that $2^{-k} \leq t < 2 \cdot 2^{-k}$, where t denotes the length of the leg of T_r.

Case 1: $t \geq \frac{3}{2} \cdot 2^{-k}$. It is easy to check that $\frac{2}{9}t^2 - 2^{-k}t + 4^{-k} \leq 0$. Thus

$$\frac{4}{9} \cdot \frac{1}{2}t^2 \leq (t - 2^{-k})2^{-k}.$$

This means that T_r contains the s-rectangle $(t - 2^{-k}) \times 2^{-k}$ of the area not smaller than $4/9$ times the area of T_r (see Figure 13, left). Clearly, $t - 2^{-k} < 2 \cdot 2^{-k} - 2^{-k} = 2^{-k}$.

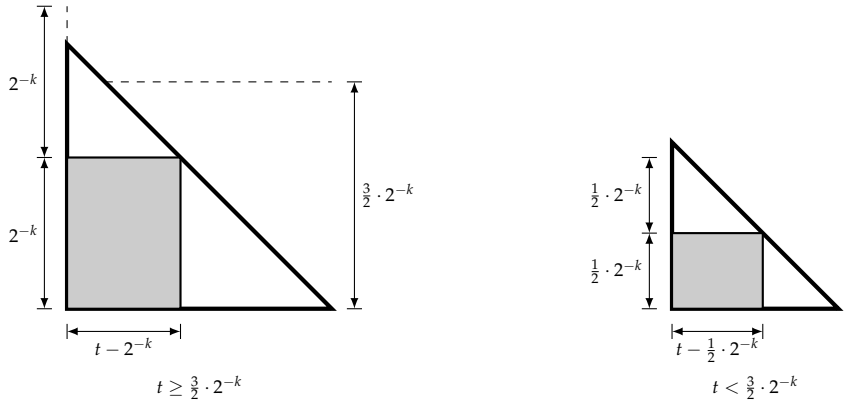

Figure 13. s-rectangle contained in T_r.

Case 2: $t < \frac{3}{2}\cdot 2^{-k}$. It is easy to verify that $\frac{2}{9}t^2 - \frac{1}{2}\cdot 2^{-k}t + \frac{1}{4}\cdot 4^{-k} < 0$. Thus

$$\frac{4}{9}\cdot\frac{1}{2}t^2 < (t-\frac{1}{2}\cdot 2^{-k})\cdot\frac{1}{2}\cdot 2^{-k}.$$

This means that T_r contains the s-rectangle $(t-2^{-k-1})\times 2^{-k-1}$ of the area greater than $4/9$ times the area of T_r (see Figure 13, right). Clearly, $t-2^{-k-1} < \frac{3}{2}\cdot 2^{-k} - 2^{-k-1} = 2\cdot 2^{-k-1}$. □

Lemma 4. *If a right isosceles triangle T_r contains a rectangle $\lambda \times \frac{1}{2^j}$ for $j \geq 1$ and $\lambda > 1/2^j$, then T_r also contains a rectangle $(\lambda - \frac{1}{2^j})\times\frac{2}{2^j}$.*

Proof. See Figure 14, where $j = 1$. □

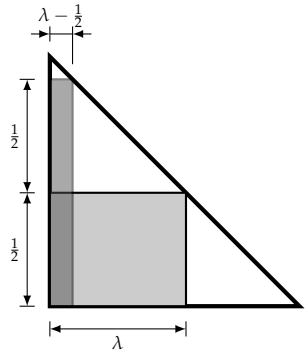

Figure 14. Ilustration of Lemma 4.

Now we describe the main covering method. Let $R_1 = a\times 1$ (for $a > 0$) and let $T_1, T_2, \ldots$ be a collection of triangles homothetic to T such that $t_1 \geq t_2 \geq \ldots$, where t_i is the length of the leg of T_i, $i = 1, 2, 3, \ldots$. The rectangle R_1 is divided into 2^k horizontal layers of height 2^{-k}, for each positive integer k (see Figure 15, left, where $k = 1$ and Figure 15, right, where $k = 2$).

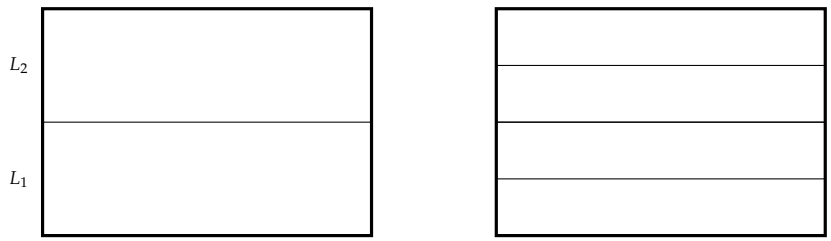

Figure 15. Division of the rectangle $R_1 = a\times 1$ into horizontal layers.

By Lemma 3 we know that any triangle T_i contains an s-rectangle $P_i = a_i \times b_i$ such that $a_i \cdot b_i \geq \frac{2}{9}t_i^2$ and that $a_i \leq 2b_i$. We will use these rectangles $P_i \subset T_i$ for the covering. The rectangles, except perhaps the last one, will be placed in layers of the proper height.

The covering algorithm.

[1] The first triangle T_1 is placed so that the corresponding rectangle P_1 is placed into the lowest layer of height b_1 at the left-bottom corner of the layer, i.e., P_1 is packed at the left-bottom corner of R_1 (see Figure 16 left and right).

Assume that $n > 1$ and that $T_1, \ldots, T_{n-1}$ have been placed. Let $k = k(n)$ be an integer such that $b_n = 1/2^k$. Denote by $L_1, \ldots, L_{2^k}$ all the layers in R_1 of height b_n. If each point of a layer L_i is covered by a placed triangle, then L_i is *full*.

[2] If there is enough empty space in R_1 to pack P_n, then we pack P_n into the lowest possible layer of height b_n as far to the left as possible (see P_2 in Figure 16 left and right).

[3] Otherwise, we find the smallest integer j such that the layer L_j is not full.

[3a] If either $j \leq 2^k - 2$ or $j = 2^k$, then we place P_n along the bottom of L_j so that the left side of P_n is the right side of the last rectangle packed into this layer.

[3b] If $j = 2^k - 1$ and if L_{2^k} is full, then we place P_n along the bottom of L_j so that the left side of P_n is the right side of the last rectangle packed into this layer.

[3c] If $j = 2^k - 1$ and if L_{2^k} is not full, then we check which layer from among L_{2^k-1} and L_{2^k} is the least filled. Initially, we place P_n along the bottom of this last filled layer so that the left side of P_n is the right side of the last rectangle packed into this layer.

[3c1] If, after placing P_n, the distance between the right side of P_n and the right side of R_1 is not greater than b_n, then we do not change anything; in that case the area of the part of P_n lying outside R_1 is not greater than b_n^2.

[3c2] If after placing P_n (together with $T_n \supset P_n$) the distance between the right side of P_n and the right side of R_1 is greater than b_n (as P_3 on Figure 16 right), then we will use another part of T_n for the covering; by Lemma 4 we can cover with T_n the uncovered part of $L_{2^k-1} \cup L_{2k}$ (the uncovered part of R_1), which is contained in a rectangle P_n' of sides of length $(a_n - b_n) \times 2b_n$ (as P_3' on Figure 16, right); as a consequence, R_1 is covered by triangles $T_1, \ldots, T_n$.

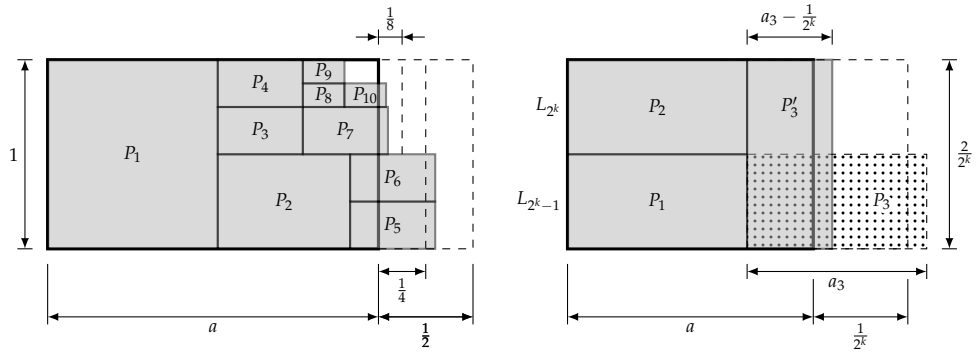

Figure 16. Illustration of the covering algorithm.

Example 1. *On Figure 16, left the rectangle P_1 is packed by Rule 1, the rectangles P_2, P_3, P_4, P_8, and P_9 by Rule 2, the rectangles P_5, P_6 and P_7 are placed by Rule 3a, the rectangle P_{10}, of height 1/8, by Rule 3c1.*

Example 2. *On Figure 16, to the right of the rectangle P_1 is packed by Rule 1 and the rectangle P_2 by Rule 2. Since there is not enough space to put P_3 in L_{2^k-1} or in L_{2^k}, we use Rule 3c2. The whole R_1 is covered.*

Lemma 5. *Any collection of positive homothetic copies T of homothety ratio not greater than 2, with the total area not smaller than $\frac{9}{4}(a+\frac{1}{3})$ permits a translative covering of the rectangle $R_1 = a \times 1$, where $a > 0$.*

Proof. Let $T_1, T_2, \ldots$ be a collection of triangles homothetic to T and let t_i denote the length of the leg of T_i, $i = 1, 2, 3, \ldots$. Without loss of generality, we can assume that $t_1 \geq t_2 \geq \ldots$.

We cover R_1 by the method presented above. Assume that R_1 is not covered by $T_1, T_2, \ldots$. We will show that this leads to a contradiction.

Since R_1 is not covered, no rectangle has been placed by Rule 3c2. Observe that all placed rectangles P_i have disjoint interiors. Some rectangles (placed by Rule 1 or 2) are contained in R_1. If a rectangle P_m has been placed by Rule 3b, then the area of the part of P_m lying outside R_1 is not greater than $b_m \cdot 2b_m$. If a rectangle P_m has been placed by Rule 3c1, then the area of the part of P_m lying outside R_1 is not greater than b_m^2.

The sum of the areas of parts of rectangles lying outside R_1 is smaller than $\frac{1}{2^2} + \frac{1}{4^2} + \ldots = \frac{1}{3}$. This means that the total area of the rectangles $P_1, P_2, \ldots$ is smaller than $a \cdot 1 + \frac{1}{3}$. Consequently, by Lemma 3, the sum of the areas of triangles $T_1, T_2, \ldots$ is smaller than $\frac{9}{4}(a+\frac{1}{3})$, which is a contradiction. □

Taking $a = 1$ in Lemma 5, we get the following result.

Theorem 2. *Any collection of positive homothetic copies T with the total area not smaller than 3 permits a translative covering of I.*

Conjecture 1. *Any collection of positive homothetic copies T with the total area not smaller than 2 permits a translative covering of I.*

4. Translative Covering a Rectangle with Triangles

Lemma 6. *Any collection $T_1, T_2, \ldots$ of positive homothetic copies T of homothety ratio not greater than 2, with the total area not smaller than $\frac{9}{4}(ab+\frac{1}{3}b^2)$ permits a translative covering of the rectangle $R = a \times b$.*

Proof. Assume that $T_1, T_2, \ldots$ is a sequence of positive homothetic copies T of homothety ratio not greater than 2, with the total area not smaller than $\frac{9}{4}(ab+\frac{1}{3}b^2)$. Let $\mathcal{H}$ be a homothety with the ratio $h = 1/b$. By Lemma 5 we know that the triangles $\mathcal{H}(T_1), \mathcal{H}(T_2), \ldots$ can translatively cover $\mathcal{H}(R) = \frac{a}{b} \times 1$. This means that $T_1, T_2, \ldots$ can translatively cover R. □

Theorem 3. *Any collection of positive homothetic copies T with the total area not smaller than $\frac{1}{2}(a+b)^2$ permits a translative covering of the rectangle $a \times b$, provided that $a \geq \frac{5+\sqrt{33}}{4}b$.*

Proof. Let $R = a \times b$, where $a \geq \frac{5+\sqrt{33}}{4}b \approx 2.686b$. Assume that $T_1, T_2, \ldots$ is a sequence of positive homothetic copies T, with the total area not smaller than $\frac{1}{2}(a+b)^2$. We lose no generality in assuming that $t_1 \geq t_2 \geq \ldots$, where t_i denotes the length of the leg of T_i.
Case 1: $t_1 \leq 2b$. Since $\frac{1}{2}(a+b)^2 \geq \frac{9}{4}(ab+\frac{1}{3}b^2)$ for $a \geq \frac{5+\sqrt{33}}{4}b$, by Lemma 6 we deduce that the triangles can cover R.

https://doi.org/10.3390/geometry3020008

Case 2: $t_1 \geq a$ and $t_2 \leq 2b$. The first triangle is placed so that the part of R not covered by this triangle is contained in a square Q of sidelength $a + b - t_1$ (see Figure 17, left). It is easy to verify that

$$\frac{1}{2}(a+b)^2 - \frac{1}{2}t_1^2 \geq 3(a+b-t_1)^2.$$

By Theorem 2, we deduce that the remaining triangles $T_2, T_3, \ldots$, of the total area greater than $\frac{1}{2}(a+b)^2 - \frac{1}{2}t_1^2$, can cover Q (the total area of the triangles is greater than three times the area of Q).

Case 3: $2b < t_1 < a$ and $t_2 \leq 2b$. The first triangle is placed so that the part of R not covered by this triangle is contained in a rectangle $R_{new} = (a + b - t_1) \times b$ (see Figure 17, right). It is easy to verify that

$$\frac{1}{2}(a+b)^2 - \frac{1}{2}t_1^2 \geq \frac{9}{4}[(a+b-t_1)b + \frac{1}{3}b^2].$$

This implies, by Lemma 6, that the remaining triangles $T_2, T_3, \ldots$, of the total area greater than $\frac{1}{2}(a+b)^2 - \frac{1}{2}t_1^2$, can cover R_{new}.

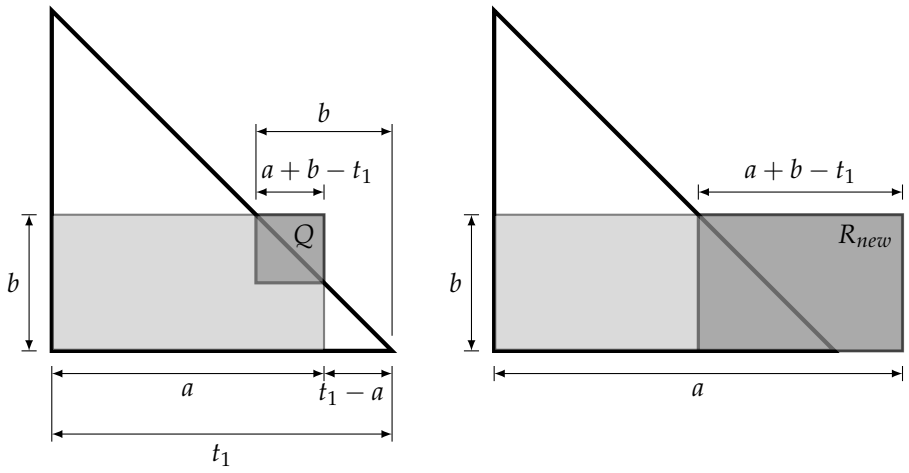

Figure 17. Illustration of Cases 2 and 3 of the proof of Theorem 3.

Case 4: there is an integer $m \geq 2$ such that $t_m > 2b$ and $t_{m+1} \leq 2b$. Any T_i can cover the rectangle $(a_i - b) \times b$. Consequently, $T_1, \ldots, T_m$ can cover $(t_1 + \ldots + t_m - mb) \times b$. It is easy to see (Figure 18) that the sum of the areas of $T_1, \ldots, T_m$ is smaller than the area of a triangle T_{new} of legs of length $t_1 + \ldots + t_m - (m-1)b$. Consider the following sequence of triangles: $T_{new}, T_{m+1}, T_{m+2}, \ldots$. By Case 2 or Case 3, we know that this sequence permits a translative covering of R. Consequently, $T_1, T_2, \ldots$ can cover R.

Case 5: $t_i > 2b$ for each i. We place the triangles as in Case 4. If R is not covered, then the sum of the areas of the triangles is not greater than the area of the triangle T_{new} of legs of length smaller than $a + b$ (see Figure 18), which is a contradiction. □

Clearly, any copy of T with the homothety ratio smaller than $\frac{1}{2}(a+b)^2$ can not translatively cover the rectangle $a \times b$. This means that the lower bound $\frac{1}{2}(a+b)^2$ given in Theorem 3 is tight.

https://doi.org/10.3390/geometry3020008

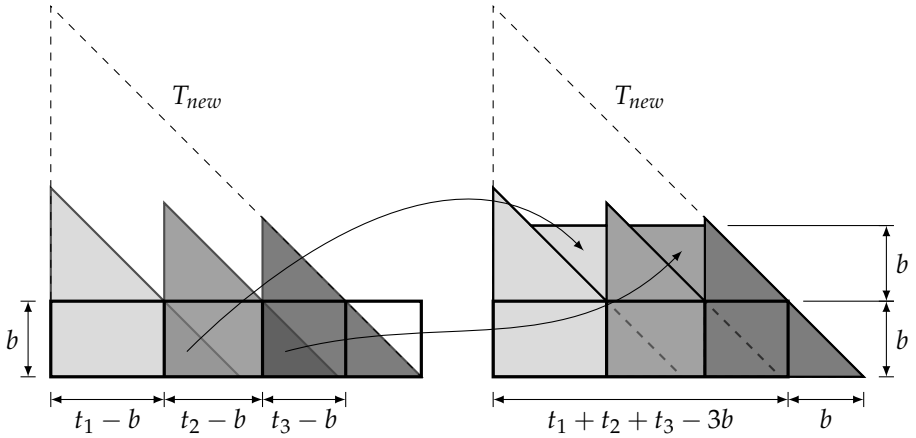

Figure 18. Ilustration of Case 4 of the proof of Theorem 3.

Author Contributions: Conceptualization, J.J. and Ł.Z.; Methodology, J.J. and Ł.Z.; Formal analysis, J.J. and Ł.Z.; Visualization, J.J. and Ł.Z.; Writing—original draft preparation, J.J. and Ł.Z.; Writing—review and editing, J.J. and Ł.Z. All authors have read and agreed to the published version of the manuscript.

Funding: This research received no external funding.

Data Availability Statement: No new data were created or analyzed in this study. Data sharing is not applicable to this article.

Conflicts of Interest: The authors declare no conflicts of interest.

References

1. Januszewski, J. Translative covering of a square by a sequence of arbitrary-oriented squares. *Demonstr. Math.* **2007**, *40*, 681–700. [CrossRef]
2. Januszewski, J. Translative covering of a square by a sequence of arbitrary-oriented squares: Part II. *Demonstr. Math.* **2008**, *41*, 441–454. [CrossRef]
3. Moon, J.W.; Moser, L. Some packing and covering theorems. *Colloq. Math.* **1967**, *17*, 103–110. [CrossRef]
4. Januszewski, J. Covering the unit square by squares. *Beitr. Algebra Geom.* **2002**, *43*, 411–422.
5. Füredi, Z. Covering a triangle with homothetic copies. In *Discrete Geometry*; Bezdek, A., Ed.; CRC Press: Boca Raton, FL, USA, 2003; pp. 435–445.
6. Song, F.; Su, Z. Parallel covering a square with isosceles right triangles. *Results Math.* **2025**, *80*, 124. [CrossRef]
7. Januszewski, J.; Zielonka, Ł. Covering a rectangle with isosceles right triangles. *J. Geom.* **2025**, *116*, 42. [CrossRef]

Disclaimer/Publisher's Note: The statements, opinions and data contained in all publications are solely those of the individual author(s) and contributor(s) and not of MDPI and/or the editor(s). MDPI and/or the editor(s) disclaim responsibility for any injury to people or property resulting from any ideas, methods, instructions or products referred to in the content.