mining

MDPI

Review

Surface Mine Planning Adaptations for the Integration of Autonomous Haulage Systems: A Review

Tinotenda Blessing Chimbwanda [1,*], Tyler Bettencourt [1], Nathalie Risso [1], Tejo Vikash Bheemasetti [2], Angelina Anani [1] and Moe Momayez [1]

[1] School of Mining Engineering and Mineral Resources, University of Arizona, Tucson, AZ 85721, USA; tbettencourt@arizona.edu (T.B.); nrisso@arizona.edu (N.R.); angelinaanani@arizona.edu (A.A.); mmomayez@arizona.edu (M.M.)

[2] Department of Civil and Architectural Engineering and Mechanics, University of Arizona, Tucson, AZ 85721, USA; tejobheemasetti@arizona.edu

* Correspondence: tchimbwanda@arizona.edu

Abstract

Autonomous haulage systems (AHSs) have become increasingly important as mining operations seek to improve productivity and remove workers from hazardous environments. The systematic integration of this technology requires not only operational change management but also a deeper understanding of mine planning implications. The existing literature describes AHSs and implementation guidelines with a focus on operational safety and autonomous system architecture, but it does not systematically address required planning-level adaptations. This study aims to identify how surface mine planning frameworks must evolve to accommodate autonomy in open-pit metal mining operations. A systematic review was conducted using the Preferred Reporting Items for Systematic Reviews and Meta-Analyses (PRISMA) methodology, with emphasis on identifying the principal aspects of AHSs that must be considered in mine planning strategies. Findings reveal major shifts in workforce dynamics, communication infrastructure, and haul-road geometry, and show that road-width and load-channelization questions remain site-specific research needs rather than settled design rules. This study highlights the need for (i) mine planning frameworks that treat AHSs as a constraint on pit geometry, haul-road structural and functional design, fleet selection, production scheduling, road-maintenance strategy, and economic and social evaluation; (ii) human–systems integration and improved human-autonomous collaboration; and (iii) empirical validation of workforce transition strategies for more effective and safe deployment.

Keywords: autonomous haulage systems; mine planning; haul road design; human–machine interface

Check for updates

Academic Editor: Roohollah Shirani Faradonbeh

Received: 18 May 2026
Revised: 27 June 2026
Accepted: 30 June 2026
Published: 2 July 2026

Copyright: © 2026 by the authors. Licensee MDPI, Basel, Switzerland. This article is an open access article distributed under the terms and conditions of the Creative Commons Attribution (CC BY) license.

1. Introduction

The exponential growth of the global population has amplified the demand for minerals, driven by the requirements of economic development, infrastructure expansion, and technological advancement [1,2]. Consequently, the need to enhance mineral production through the expansion of mining operations has become increasingly critical. However, such growth also introduces significant safety risks for miners, including heavy machinery incidents, equipment accidents, ground instability, and blasting hazards [3,4]. This highlights the importance of minimizing human exposure to hazardous environments. Safety

pressures and workforce shortages, particularly for remote mining operations [5–8], are among the leading drivers for autonomous haulage system (AHS) adoption.

According to [9], AHSs refer to the use of automated trucks that operate without human drivers to transport materials in surface mining operations. AHSs remove humans from hazardous environments, while also enhancing the predictability of key haulage performance metrics such as cycle times, vehicle speed behavior, fuel consumption, and fleet interaction dynamics, thereby supporting improved operational planning and productivity [8,10,11]. In this review, mine planning is interpreted as a broad surface mining value-optimization process that determines what material should be mined, when it should be mined, and how mined material should be handled while satisfying physical, geotechnical, environmental, operational, community, workforce, supply-chain, and economic constraints [12]. This definition clarifies the scope of this paper. AHS integration is not limited to truck dispatch; it can change the constraints and assumptions used in pit design, ramp geometry, phase access, fleet selection, haul-road design, production scheduling, maintenance planning, and life-of-mine economic evaluation. Recent developments in the United States illustrate this growing momentum. Freeport-McMoRan, one of the world's leading copper producers, is retrofitting its haul truck fleet with autonomous capabilities [13], converting about 30 trucks at its Bagdad mine in Arizona to fully autonomous operation. These emerging deployments mark the expanding adoption of AHSs across North America. Globally, the transition toward autonomous haulage is even more pronounced. A recent study by [14] highlights large-scale AHS implementation at Codelco's Radomiro Tomic Mine and Gabriela Mistral Mine operations in Chile, as well as at Rio Tinto's West Angelas Mine and Solomon Hub, and BHP's Navajo Mine. Together, these deployments demonstrate that AHSs are increasingly embedded within large-scale surface mining operations worldwide.

Despite growing adoption of AHSs, most guidelines focus on operational safety, risk management, and system architecture without systematically addressing how mine planning methodologies must change. The current literature is fragmented across fleet management, traffic control, equipment engineering, and safety engineering, with only a few studies providing integrated mine planning perspectives. Yet mine planning is shaped by key decision variables, including haul-road design, speed policies, equipment selection, production scheduling, and traffic-interaction modeling [15]. Very few studies have explicitly translated AHS impacts into these planning-level decision variables. Recent work has begun to close this gap: [16] presented one of the first planning-centered discussions of mine design, planning, and scheduling when haul trucks are automated, while [17] examined how open-pit design fundamentals such as road-width requirements may be adapted to leverage AHS advantages. Related guidance similarly suggests that pit layout, phase sequencing, and infrastructure should be reconsidered from the ground up for autonomous operation [18]. However, systematic incorporation of AHS impacts into mine planning methodologies remains limited, and this gap continues to hinder effective implementation.

To realize the benefits of AHS, mine planning must be supported by appropriate standards, trained personnel, and specific regulatory frameworks. Bridging the gap between regulatory intent and operational implementation requires systematic integration of AHS considerations into mine planning methodologies. In this study, we conduct a Preferred Reporting Items for Systematic Reviews and Meta-Analyses (PRISMA)-based systematic review to synthesize existing evidence and identify the specific planning-level adaptations necessary for effective AHS deployment in open-pit metal mining operations.

2. Review Objectives

We present a comprehensive examination of current mine planning practices, key success factors for AHS implementation, and gaps in current mine planning. With a focus on open-pit metal mining operations involving fully autonomous haul trucks, the primary objective of this review is to provide an overview of the changes that need to take place in mine planning to fully leverage the benefits presented by AHSs.

To connect the review questions to mine planning practice, this review interprets AHS integration across three planning levels: strategic, tactical, and operational. Figure 1 summarizes how autonomy affects conventional planning variables and highlights where evidence from the reviewed literature is translated into planning decisions. This framework is used throughout the synthesis to distinguish long-range design choices, such as pit layout and capital allocation, from medium-term implementation choices, such as phase access and infrastructure staging, and short-interval control decisions, such as dispatching and road-condition response. Economic terminology in this framework distinguishes capital expenditure (CAPEX) from operating expenditure (OPEX).

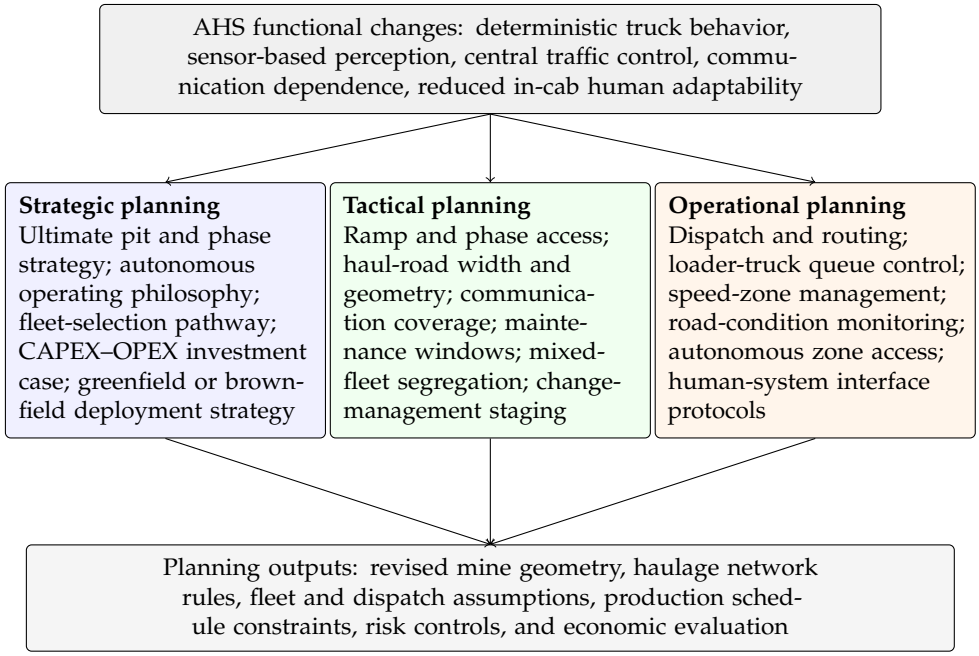

Figure 1. Planning-level framework for translating AHS characteristics into strategic, tactical, and operational mine planning decisions.

3. Methodology

This literature review focuses on key aspects, including methods and techniques for AHS implementation, strategies for integrating autonomy into mine design, and details on the resulting improvements to operational efficiency. The study follows the PRISMA 2020 statement to support transparent and reproducible review reporting [19]. Structured systematic-review workflows have been used in mining-domain reviews to improve traceability in risk assessment and mine planning synthesis [20,21]. The PRISMA methodology provides a systematic framework for planning and reporting reviews, enhancing both transparency and reproducibility. Figure 2 presents the PRISMA flow diagram, illustrating the database identification, screening, eligibility assessment, inclusion process, and supplementary-source accounting used in the revised synthesis.

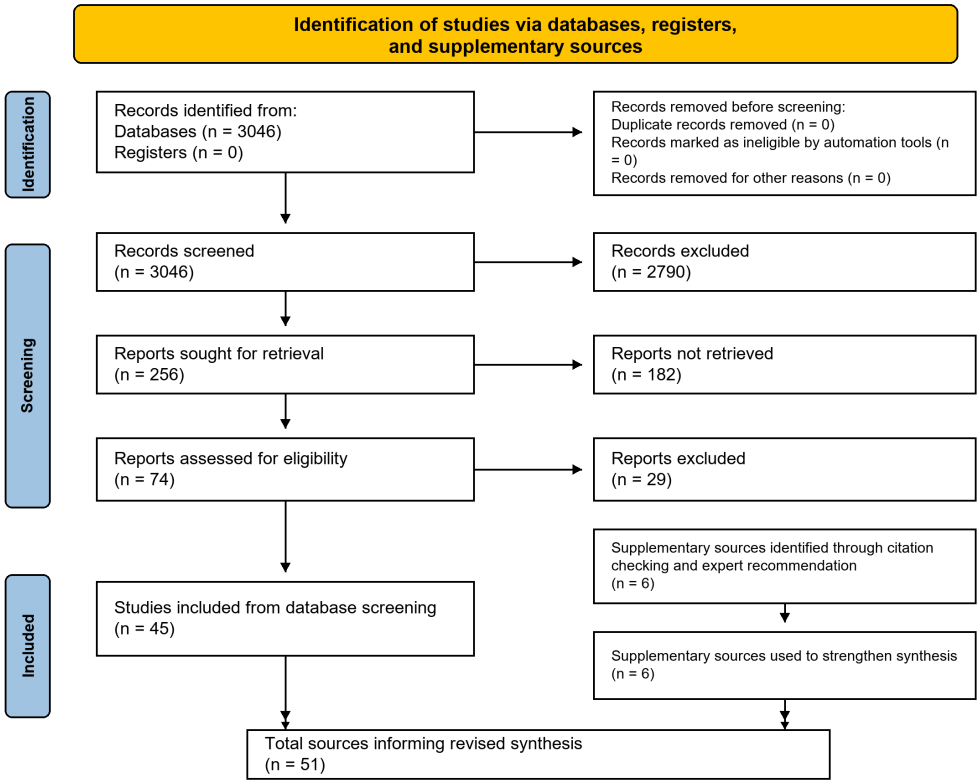

Figure 2. PRISMA workflow for database-screened studies and supplementary sources used in the revised synthesis.

The main steps in the methodology adopted in this study are as follows:

- Define research questions based on the problem domain, focusing on AHSs and mine planning, and retrieve relevant studies from multiple databases.
- Extract and compile key data from the selected studies to offer evidence-based answers to the defined research questions.
- Analyze compiled data to identify relevant takeaways from the results, as they pertain to the initial research questions.

3.1. Research Questions

This review is guided by a set of research questions that examine how mine planning practices must evolve to accommodate AHSs. These questions provide a structured framework for analyzing the current literature and identifying gaps in the planning, design, and operational strategies required for successful AHS integration. Specifically, they address how autonomy influences mine design parameters, infrastructure requirements, and human–machine interactions that underpin efficient and safe mining operations.

- RQ1: What are the documented benefits of AHSs that directly influence mine planning decisions, particularly regarding productivity, safety, and environmental performance?
- RQ2: What infrastructure, communication, and systems-engineering requirements must be integrated at the planning stage to support reliable and secure autonomous operations?
- RQ3: How does the implementation of AHSs reshape mine economics and operational efficiency, including haulage optimization, energy consumption, and equipment utilization?
- RQ4: Which elements of mine planning require modification to enable effective deployment of AHSs?

- RQ5: How should regulatory and standardization frameworks be interpreted within the mine planning process to ensure compliance and interoperability of AHS?
- RQ6: To what extent can haul-road design be optimized to balance safety, operational efficiency, and economic outcomes under autonomous conditions?
- RQ7: What environmental and climatic risks affect AHS performance, and how should these risks be incorporated into planning design and workforce training?
- Scope clarification: Quantitative risk-tolerance thresholds and real-time risk communication were not retained as standalone research questions because the reviewed literature did not provide enough comparable evidence to resolve them systematically. Instead, these issues are treated as implementation constraints within the sections on human–systems integration, communication infrastructure, road-condition monitoring, and limitations.

3.2. Search Strategy

The core literature for this review was sourced from leading journals specializing in mine planning. These journals were selected based on their impact factor, expertise in mine planning and design, and broad coverage of significant titles in the field. The distribution and credibility of these sources, reflected by their associated impact factors, are presented in Table 1. To ensure comprehensive coverage, the search was iteratively expanded to include complementary academic databases such as IEEE Xplore, SpringerLink, and ScienceDirect. Conference papers from IEEE Xplore were specifically included, as this platform primarily indexes peer-reviewed proceedings, ensuring that the studies meet the review's quality standards. Furthermore, technical reports from leading industry stakeholders and regulatory bodies were also reviewed to address gaps in the traditional peer-reviewed literature.

Table 1. Impact factors of journals referenced in this study (2024 Journal Citation Reports).

Journal	Impact Factor (2024)
IEEE Trans. on Intelligent Vehicles	14.07
International Journal of Mining Science and Technology	13.7
Automation in Construction	11.5
Resources Policy	10.1
Mechanical Systems and Signal Processing	8.9
IEEE Internet of Things Journal	8.2
Communications Engineering (*Nature*)	5.24
Sensors	3.5
Mineral Economics	3.5
Sustainability	3.3
Electronics	2.6
Applied Sciences	2.5
Progress in Artificial Intelligence	2.4
Mining, Metallurgy & Exploration	1.5
Journal of Control, Automation and Electrical Systems	1.3
Mining Technology	1.1
Process Safety Progress	1.0
Journal of Mining Science	0.8

The chosen journals and databases collectively provide a comprehensive range of literature related to mine planning, AHSs, and broader applications of automation in mining. The initial search string was designed using a mix of keywords aligned with

the predefined research questions, focusing on mine planning, autonomous systems, and operational efficiency. One example of a full Boolean query used in Scopus is as follows: ("mining" OR "mine planning" OR "open pit" OR "open-pit") AND ("autonomous haulage" OR "autonomous truck" OR "automated truck" OR "automated haulage" OR "robotic truck" OR "intelligent management" OR "dispatch" OR "mine automation" OR "human-system" OR "human factors" OR "digital twin" OR "vehicle routing" OR "route optimization").

The initial keyword combinations yielded 3046 records. After filtering for publication year (2005–2025), mining relevance, English language, and publication type, 256 articles remained for screening. Title, abstract, and keyword screening then produced 45 peer-reviewed studies for detailed synthesis. Of the 74 reports assessed for eligibility, 29 were excluded after full-text review. The exclusion reasons were: wrong population or mining setting, such as underground, quarry, or non-mining transport applications ($n = 8$); wrong concept, where the source addressed general automation but not autonomous haulage or planning integration ($n = 7$); wrong outcome, where no mine planning, design, scheduling, safety, environmental, or economic implication was extractable ($n = 6$); wrong source type or insufficient methodological detail for evidence synthesis ($n = 5$); and insufficient full-text information to support coding against the review questions ($n = 3$). A completed PRISMA 2020 checklist is provided as Supplementary Material. Six supplementary sources were identified through citation checking, expert recommendation, and targeted handbook or engineering references to strengthen the mine planning and haul-road design interpretation. These supplementary sources were not added to the original database-search denominator; instead, they are reported separately in Figure 2, yielding 51 total sources informing the final synthesis. The screening confirmed that only a limited subset of the AHS literature directly addresses layout, road design, production scheduling, and other planning adaptations; therefore, credible standards, technical reports, and OEM or industry documents were retained only where they clarified implementation constraints or could be triangulated with peer-reviewed evidence.

The search results also showed that publication output and deployment maturity do not always align: although operational AHS adoption in the United States remains less mature than in some Australian and South American operations, the United States contributes substantially to the international research base on autonomous mining systems and mine planning, alongside China, Australia, Chile, Brazil and Canada.

Following the initial database search, a multi-stage screening process was implemented. An initial review of article titles and abstracts filtered articles by relevancy before conducting subsequent full-text reviews to assess eligibility based on predefined inclusion and exclusion criteria. This staged approach ensured that only studies directly relevant to the integration of AHSs into surface metal mine planning and design over the past two decades were included in the final synthesis.

For each study that passed the full-text screening, key characteristics were systematically extracted and coded. Extracted data included the type of mining operation, geographic region, type of autonomous technology implemented, methodological approaches, and reported outcomes. This structured extraction process enabled the synthesis of findings across diverse studies and enhanced the reproducibility of the review.

3.3. Screening, Extraction, and Quality Appraisal

The screening and extraction process was designed to distinguish evidence that directly informs mine planning decisions from research that describes autonomy at a broader technological or organizational level. Records were first screened for relevance to surface mine planning, open-pit haulage, autonomous haul trucks, traffic management, road design, safety, communication infrastructure, or workforce integration. During full-text

review, each retained source was coded against the research questions and the planning level shown in Figure 1. A structured extraction matrix was used to record operation type, commodity context where available, country or region, AHS maturity, planning variable addressed, type of evidence, reported performance or risk outcome, stated implementation constraints, and the source type used for appraisal. Ambiguous coding decisions were reconciled through author discussion, and the final synthesis grouped evidence by planning variable rather than by technology category alone.

Because the reviewed literature combines empirical studies, simulation papers, standards, incident reports, technical guidelines, and industry white papers, a single clinical-style risk-of-bias tool was not directly applicable. Instead, sources were appraised using the author-defined criteria summarized in Table 2. The appraisal was used to determine how each source could support the synthesis: peer-reviewed studies and standards were weighted most heavily when deriving planning implications, while industry reports were used primarily to support implementation context, operational examples, and technology-specific constraints. Non-peer-reviewed sources were retained only when they came from recognized regulators, standards bodies, OEMs, or mining organizations and when their claims could be triangulated with peer-reviewed or regulatory evidence. Planning recommendations were therefore based on converging evidence across source types rather than on isolated case examples.

Table 2. Author-defined source appraisal criteria used to interpret evidence in the review.

Source Type	Appraisal Criteria	Use in Synthesis
Peer-reviewed empirical, simulation, or modeling studies	Method transparency, mine planning relevance, AHS specificity, data source clarity, and stated limitations	Primary evidence for planning adaptations, trade-offs, and research gaps
Peer-reviewed review papers	Search transparency, topic scope, classification logic, and connection to mine planning or mining risk	Contextual evidence and comparison with adjacent mining reviews
Standards, regulatory documents, and industry guidelines	Authority of issuing organization, currency, operational specificity, and consistency with peer-reviewed evidence	Support for safety, compliance, design, and implementation requirements
OEM reports, technical reports, and case studies	Traceability of claims, site specificity, technical detail, and triangulation with other sources	Supporting evidence for deployment practice and practical constraints

3.4. Eligibility Criteria, Source Appraisal, and Study Characteristics

Consistent with PRISMA reporting, the eligibility criteria, source appraisal logic, and study characteristics are presented together because they determine which evidence enters the synthesis.

To ensure the relevance and quality of the selected literature for this review on the integration of AHSs into mine planning, a structured set of inclusion and exclusion criteria was applied during the screening process. These criteria were developed to align with the geographic, operational, technological, and academic context of the research.

The inclusion criteria for this review focused on studies conducted in, or directly applicable to, mining operations in the United States, South America, Australia, or Canada, given their leadership in autonomous mining technologies and strong regulatory frameworks. This geographic focus was selected to reduce evidence uncertainty rather than to imply that AHS planning issues are limited to these regions. These jurisdictions contain

many of the earliest and most mature large-scale AHS deployments, have comparatively stronger public reporting through regulators, standards bodies, OEMs, and major mining companies, and therefore provide more historical evidence on technology adoption, safety performance, operational constraints, and implementation lessons. Although South America was underrepresented in the Scopus bibliometric output due to initial search limitations, its significant AHS deployment, such as at Gabriela Mistral [10,14], justified its retention. Works published between 2005 and 2025 were included to ensure technological relevance.

Source quality was maintained by selecting peer-reviewed journal articles, industry white papers, and technical reports from reputable agencies such as the Mine Safety and Health Administration (MSHA) and internationally leading OEMs, including Komatsu and Caterpillar [22]. Although they lacked peer review, Spanish-language Master's theses and engineering technical papers were used during the research process for cross-referencing and to identify additional citations. Supplementary sources outside the database-search set were retained only when they directly supported mine planning definitions, haul-road design criteria, or planning-model interpretation.

Studies focused on countries outside the United States, South America, Australia, and Canada were excluded unless their findings showed clear applicability to the selected surface metal mining contexts. Papers on underground mining, non-metal mining (e.g., coal, salt), or quarrying were also excluded due to differing operational contexts. Research centered on manually operated, remote-controlled, or semi-autonomous trucks was omitted unless full autonomy was demonstrated. Work published before 2005 was excluded from the main synthesis, except when used for historical context. To ensure technical rigor, non-peer-reviewed sources such as blogs, news articles, and opinion pieces were excluded.

The included studies were then characterized based on several key factors to contextualize the findings of the review. In terms of mining type, the majority of studies focused on surface mining operations, particularly open-pit metal mines such as copper, iron, and gold. Geographically, a significant portion of the reviewed literature originated from Australia, followed by contributions from Chile, Canada, and the United States. Regarding technological maturity, the reviewed studies primarily address fully autonomous systems, reflecting the increasing trend toward full autonomy over semi-autonomous solutions in surface mining operations.

Collectively, these study characteristics were considered throughout the synthesis to ensure that conclusions drawn are appropriately grounded in operational realities relevant to surface metal mining.

4. Findings

The findings are organized in the following subsections by benefit domains, system components, regulatory challenges, workforce dynamics, human–systems interaction, and haul-road design. Table 3 links these topic-specific findings to conventional surface mine planning variables. This structure clarifies how AHS adoption affects not only operational technology deployment but also pit and phase design, haulage network design, fleet selection, production scheduling, infrastructure staging, and implementation risk.

The consolidated planning-variable synthesis in Table 3 links AHS-related planning effects to the modeling approaches needed for their evaluation. Ultimate-pit and phase-design effects are linked to pit-limit and phase-design sensitivity studies, whereas production scheduling, dispatch, and staged commissioning effects require time-indexed scheduling or simulation tools. In this context, Lerchs–Grossmann (LG) pit-limit analysis is useful for testing changes in economic block value and road-geometry assumptions, while Direct Block Scheduling (DBS) and short-term scheduling models are more suitable for rep-

resenting commissioning dates, autonomous-zone access, ramp availability, infrastructure dependencies, and phase-specific traffic restrictions.

Table 3. Synthesis linking the review findings to conventional surface mine planning variables.

Mine Planning Variable	AHS-Related Finding from the Reviewed Literature	Planning Interpretation
Ultimate pit and phase design	AHS can change haulage cost, ramp requirements, road-width assumptions, and the feasibility of segregated autonomous zones [16–18].	Pit-limit and phase-design studies should test autonomous and conventional haulage cases separately, especially where road width affects stripping ratio.
Haul-road and ramp design	Autonomous trucks require more consistent road geometry, controlled gradients, reliable drainage, predictable speed zones, low rolling resistance, and higher surface-condition reliability [15,23–26].	Haul-road design should be optimized jointly for safety, sensor reliability, structural performance, maintenance access, and economic value.
Fleet selection and economic evaluation	AHS deployment can improve utilization and reduce labor exposure and fuel use, but requires autonomy hardware, communication infrastructure, control rooms, training, and sustaining maintenance investment [9,11,16].	Fleet selection should compare CAPEX–OPEX scenarios rather than treating AHSs as a simple truck replacement.
Production scheduling and dispatch	More repeatable autonomous travel behavior improves schedule predictability, while loader interaction, dump access, road maintenance, charging or fueling, and recovery events can still create bottlenecks [14,27,28].	Production schedules should incorporate autonomous-zone commissioning, dispatch constraints, queueing effects, and sensitivity to operational disruptions.
Infrastructure and system integration	AHS deployment depends on sensing, positioning, low-latency communications, cybersecurity, and supervisory control architectures [29–32].	Communication coverage, redundancy, network security, and control-room capacity should be treated as planning-stage infrastructure constraints.
Workforce, regulation, and change management	Autonomous haulage shifts work from in-cab operation to supervisory, maintenance, control-room, and system integration roles, while standards remain fragmented [33–35].	Mine plans should include staffing readiness, training timelines, access protocols, regulatory interpretation, and staged implementation schedules.

4.1. Key Benefits of AHS

The documented safety, productivity, and environmental benefits of AHSs directly influence mine planning decisions. These benefits are not merely operational outcomes; they reshape production scheduling assumptions, fleet sizing strategies, haul-road utilization, and long-term economic modeling. Improvements in equipment utilization, cost efficiency, and fuel performance also translate into measurable economic advantages.

The literature consistently identifies three dominant benefit domains that directly influence mine planning decisions: safety performance, productivity enhancement, and environmental efficiency.

4.1.1. Safety Enhancement

It is well-documented that AHSs reduce required personnel per truck from 4.5 for manned operations to less than 0.8 for AHSs [11,16]. AHSs reduce operator exposure to haulage hazards and can lower collision risk when autonomous operations are appropriately designed, monitored, and integrated into the mine plan [14,36]. In a simulation-based

comparative risk assessment, [14] found that fully autonomous haulage reduced collision probability relative to non-autonomous and hybrid haulage scenarios, with the reported probability decreasing to 0.22 compared with 0.98 for human-operated haulage. These findings support treating AHS safety benefits as a planning variable that depends on traffic design, intersection layout, monitoring, and operating controls rather than as an automatic consequence of removing the driver.

4.1.2. Productivity

Autonomous machines operate without interruptions, minimizing downtime and optimizing resource usage, thus improving overall equipment effectiveness and predictability [37–39]. AHS deployments also address the persistent shortage of skilled personnel [40].

Recent implementations have reported productivity gains of up to 30% in surface mining operations [16,41]. Rio Tinto operates about 150 unmanned mining trucks, primarily from Komatsu, at its Pilbara mines [42]; prior reporting indicates a 13% productivity increase, 700 additional operating hours per autonomous truck in 2017, and a 15% reduction in operating costs compared with manned trucks [10]. Because these values are drawn from industry and company reporting rather than peer-reviewed comparative trials, they are interpreted here as source-reported implementation evidence. A further benefit of AHSs is smoother equipment utilization, which supports more predictable production [16].

4.1.3. Environmental Benefits

AHSs have also been reported to reduce fuel consumption by approximately 13%, translating into lower greenhouse gas emissions and improved environmental performance [11,16]. This value is treated as a source-reported performance estimate, and its transferability should be evaluated against site-specific haulage profiles, operating controls, and energy-use assumptions. From a planning perspective, these environmental benefits are linked to smoother speed profiles, reduced idle time, improved dispatch predictability, and the ability to model fuel or energy use as part of fleet selection, production scheduling, and life-of-mine economic evaluation. By enhancing productivity and safety while minimizing environmental impact, automation supports the mining industry's transition toward more sustainable practices.

Collectively, these findings demonstrate that AHS adoption alters core mine planning variables, including safety margins, equipment utilization assumptions, production predictability, and environmental performance benchmarks. These documented benefits form the foundation upon which subsequent planning adaptations must be evaluated.

4.2. Key Components of AHS

Infrastructure, communication, and systems-engineering requirements must be embedded within mine planning frameworks to enable reliable and secure AHS deployment. While AHSs are often presented as equipment-level innovations, the reviewed literature demonstrates that sensing, communication, decision-making, and control architectures impose structural planning constraints that influence network design, layout configuration, data governance, and operational redundancy.

A synthesis of the reviewed literature indicates that AHSs comprise four interdependent system-level components: (1) communication infrastructure, (2) sensing and positioning systems, (3) decision-making and optimization algorithms, and (4) real-time control and supervisory integration.

4.2.1. Communication Infrastructure

Secure and low-latency communication networks enable continuous data exchange between autonomous equipment and remote operation centers. However, the literature emphasizes that AHSs function as cyber–physical systems (CPSs)—integrated physical and computational architectures that are inherently vulnerable to cybersecurity threats and communication breakdowns [14,29,30]. Studies highlight susceptibility to Global Positioning System (GPS) spoofing, signal interference, and network attacks, which may induce unsafe vehicle behavior if not properly mitigated [31]. These risks make secure and reliable communication necessary for safety and productivity in mining environments [31,43]. From a mine planning perspective, this implies that communication architecture must be treated as critical infrastructure. Planning-stage requirements include deployment of private LTE/5G networks, redundancy mechanisms, segmentation of safety-critical systems, secure fleet management software, and edge-computing capabilities to reduce latency. Reliable communication is therefore not merely supportive but structural to AHS safety, operational continuity, and production predictability [31,32,43].

4.2.2. Sensing and Positioning Systems

The literature consistently identifies multi-modal perception as foundational to AHS operation. Autonomous haul trucks integrate LiDAR, radar, machine vision, and Global Navigation Satellite System (GNSS)-based positioning to enable obstacle detection, terrain mapping, and lane adherence in unstructured open-pit environments [27,44,45]. Multi-constellation GNSS solutions (GPS, GLONASS, Galileo, BeiDou) enhance positional accuracy and system robustness under challenging conditions such as dust and variable lighting [46]. These sensing architectures have been shown to reduce collision rates and improve operational stability in production-scale deployments [47].

4.2.3. Decision-Making and Optimization Capabilities

Artificial intelligence (AI) and machine learning (ML) algorithms enable adaptive routing, traffic management, and dynamic dispatching in response to changing operational conditions [8,48]. Reinforcement learning approaches are increasingly explored for real-time optimization of haul cycles and equipment coordination [11]. The literature further highlights the need for models capable of integrating operational micro-constraints, such as charging cycles and seasonal haul-road degradation, which directly influence performance and infrastructure loading [28,49].

4.2.4. Real-Time Control and Supervisory Systems

AHSs are embedded within short-interval control frameworks that continuously adjust dispatching and maintenance scheduling. Predictive maintenance systems that use equipment telemetry, such as vibration and temperature data, have demonstrated measurable improvements in reliability. Case evidence reports increases in mean time between failure and reductions in unplanned maintenance following deployment of integrated monitoring systems [50].

Collectively, these system-level components demonstrate that AHS deployment is not solely a fleet upgrade but an infrastructure transformation. Effective integration requires early-stage planning for sensing coverage, communication redundancy, data governance, algorithmic transparency, and supervisory control architecture. These requirements reshape mine layout design, capital allocation, network topology, and operational risk modeling, making autonomy-ready infrastructure a foundational planning prerequisite.

4.3. Current Challenges

Existing regulatory and standardization frameworks remain only partially aligned with the mine planning integration needs of AHSs. While several guidelines and safety standards provide foundational operational direction, they often do not translate directly into actionable mine planning methodologies. The resulting regulatory fragmentation introduces uncertainty, increases development costs, and complicates scalable deployment of AHSs within surface mining operations.

Despite the well-documented benefits of AHSs, [36,51] identify significant gaps in existing research and guidance concerning standardized references for AHS integration. These gaps create challenges for the efficiency, safety, and cost-effectiveness of mining operations [52]. Standards and regulations play a crucial role in mine planning by ensuring that mining activities are conducted in a sustainable, safe, and environmentally responsible manner [53]. These frameworks guide the entire lifecycle of mining operations, from initial planning and development to closure and reclamation. Missing elements include standardized protocols for haul-road infrastructure design, human-autonomous safety procedures, and emergency management [54]. These gaps increase development costs and impede safe, scalable deployment of autonomous systems. Although legislative provisions for autonomous systems exist in countries such as Canada and Australia [35], the lack of a specific regulatory framework in the United States and other jurisdictions has been a barrier to widespread AHS adoption [10,55,56]. Figure 3 illustrates the uneven global distribution of AHS adoption by country. The development of standards is crucial to streamline operations, enhance safety, and reduce costs associated with the deployment of AHSs.

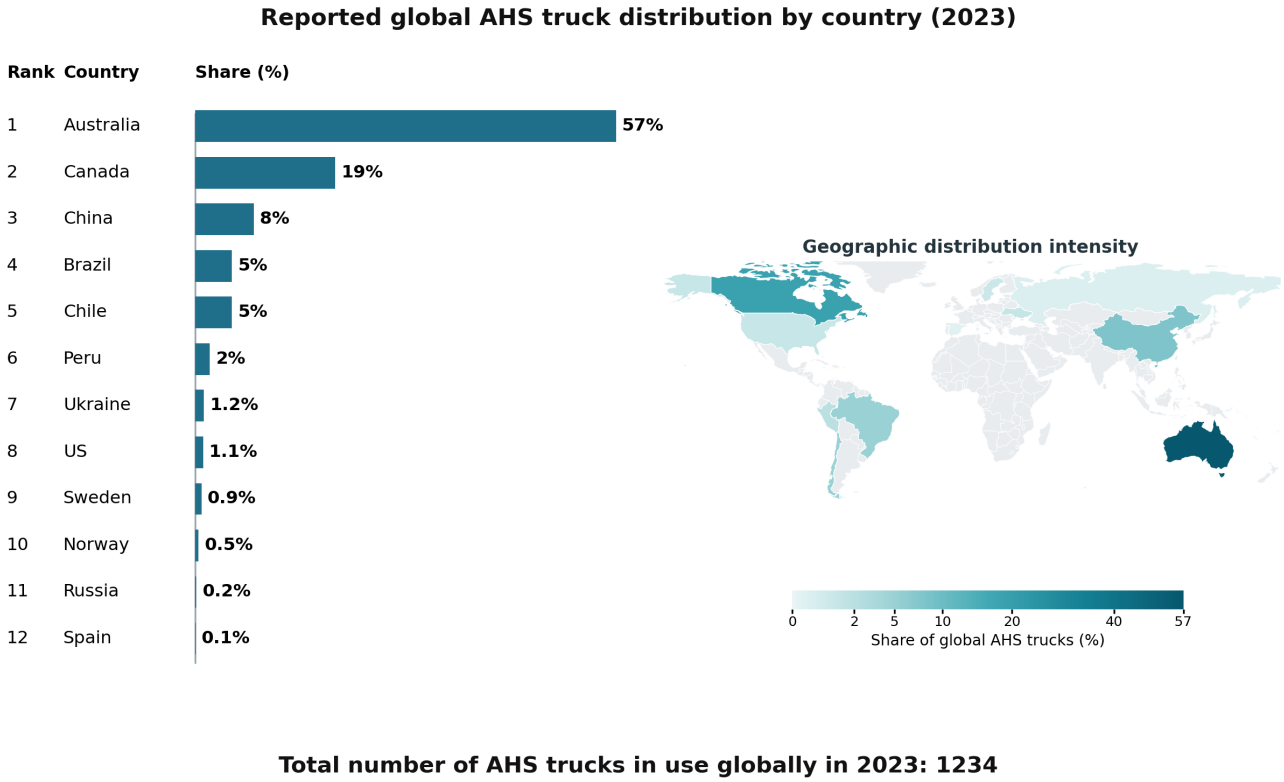

Figure 3. Reported global AHS truck distribution by country in 2023, based on an industry analysis by PwC (PricewaterhouseCoopers) reporting 1234 AHS trucks globally. Percentages follow the precision reported in that source and should be interpreted as source-reported shares rather than independently audited deployment statistics. Data summarized from [57].

AHSs also introduce new risks and challenges [58] related to complex human-autonomous interactions and new failure modes, which reshape the landscape of mine planning. Frameworks such as the Mining Automation Real-time Control System Architecture Standard Reference Model (MASREM) [59], Global Mining Guidelines Group (GMG) guidance [43], the Safe Mobile Autonomous Mining in Western Australia–Code of Practice [60], and ISO 17757:2019 [61] offer a foundation for this transition. However, existing guidance often does not fully address the planning-level changes demanded by AHS implementation. Human–systems integration guidance indicates that MASREM focuses on high-level design concepts, while the Western Australian code of practice adopts a conventional risk-management strategy despite the additional risks introduced by AHSs [35]. The same guidance further notes that ISO 17757:2019 focuses on failure modes but may overlook broader unwanted outcomes. A unified standard and regulatory framework specific to AHSs has similarly not yet emerged [52].

Collectively, these limitations indicate that mine planning for AHSs cannot rely solely on existing operational safety standards; instead, planners must interpret and extend these frameworks to explicitly incorporate layout design, human–systems integration, and infrastructure resilience at early project stages.

4.4. Changes in Workforce Dynamics

4.4.1. Training and Transferable Skills

Workforce readiness emerges as a core mine planning parameter in AHS implementation. Changes in skills, staffing models, and supervisory roles impose constraints on scheduling, fleet allocation, and infrastructure design. Training requirements and human-centered operational coordination also connect workforce readiness to operating and environmental constraints.

As mines adopt AHSs, workforce dynamics undergo significant transformation, demanding reconsideration of traditional mine planning strategies. Recent work on mine-control tasks shows that automation shifts work from drivers to remote operators and that automation integration often fails when human factors are not addressed [33]. Poorly designed job roles and interfaces have led to shortages of skilled "mine controller" candidates, emphasizing a growing gap in personnel qualified to operate autonomous fleets. This mismatch is also reflected in workforce transition studies that highlight the urgent need for mining personnel to move from traditional manual roles to technically intensive positions involving remote operation, data analysis, and system integration [34]. Mining 5.0, derived from the principles of Industry 5.0, centers on close collaboration between humans and autonomous systems. Industry 5.0 marks an advancement of the conventional industrial manufacturing model by emphasizing synergy between human intelligence and machine automation [1].

From a mine planning perspective, these workforce transitions have direct implications for scheduling, pit sequencing, and fleet allocation. The availability and skill level of remote operators influence the achievable level of autonomy, which in turn constrains equipment utilization rates and production planning. Planners must account for learning curves, human–systems interaction delays, and communication dependencies when modeling equipment performance and shift structures. Thus, workforce readiness is not merely an operational issue but a planning parameter that determines how effectively autonomous haulage can be integrated into mine layouts and production schedules. Considering these interdependencies, training and education must be transformed to create a workforce capable of supporting autonomy-ready mine plans and sustaining productivity in increasingly digital mining environments [56,62]. This aligns with a driverless-truck operation study [26], which showed that drivers' tasks shifted rather than disappeared. The study

revealed that new system-based roles, such as fleet supervisors, have emerged, corroborating broader observations by [34]. Recent guidance and human-factors studies [18,63,64] further note that the cognitive workload and coordination demands placed on control-room personnel in autonomous operations create recruitment and retention pressures. These factors must be considered by mine planners through continuous training programs, human-centered control-room design, and robust operational support systems. Collectively, these findings indicate that human–systems integration should be treated as a core element of autonomous mine design and planning. Strategic adjustments recommended by prior studies include:

- Incorporating predictive staffing models into production planning [18];
- Designing operator rotation schedules that are flexible and supported by backup staffing capacity [63];
- Allocating dedicated space for relief operators and system diagnostics [64];
- Developing control rooms with ergonomic interfaces and rest areas [63,64].

Effective deployment of AHSs therefore requires modification of workforce planning parameters such as staffing availability, competency development timelines, shift structures, and control-room infrastructure. These elements fundamentally constrain production scheduling and fleet allocation decisions.

4.4.2. Operator Fatigue and Attention

Cognitive workload, fatigue, and supervisory attention constraints influence real-time risk detection and operational continuity in autonomous mining environments. While AHSs remove operators from physical hazards, they introduce new human-centered risks within control-room supervision and loading coordination. These factors must be incorporated into planning-level communication protocols, escalation structures, and spatial design decisions to prevent safety degradation and production instability.

While removing operators from hazardous environments improves physical safety, it shifts part of the risk into control-room supervision and cognitive workload [26]. Systematic-review evidence indicates that automation can increase workload, trust-management demands, fatigue, decision fatigue, and loss of situational awareness for operators supervising multiple autonomous systems [33,40]. For mine planning, this means that real-time risk communication should be designed around clear alert logic, escalation pathways, operator-to-supervisor handoffs, and decision-support rules that reduce stoppage duration and prevent cascading production delays.

Beyond communication protocols, autonomy also alters loading system dynamics. Although AHSs improve truck availability and reduce idle time, maintaining continuous, high-intensity haul cycles places greater demands on excavator operators and loading areas. To prevent fatigue-induced bottlenecks and throughput instability, mine planners must integrate optimized loading-area geometry, appropriate dig-face spacing, and equipment redundancy into pit sequencing and spatial design [65].

4.4.3. Implications of AHS on Human–Machine Interface

Human–machine interface (HMI) considerations emerge as critical mine planning variables requiring modification for effective AHS deployment. While AHSs are often evaluated from an operational or technological standpoint, their integration fundamentally reshapes planning-level decisions related to haul-road layout, operating zone design, communication architecture, and workforce configuration. Environmental risks, operational risk controls, and real-time communication mechanisms also influence both system safety and production continuity, linking HMI planning to broader operating constraints.

AHSs promise improved safety and productivity by removing drivers from hazardous environments, but the literature consistently shows that autonomy redistributes rather than eliminates human involvement. Personnel still interact with autonomous systems during maintenance, inspection, supervision, recovery, and infrastructure support, creating new failure modes at the human–machine interface [15,26,66]. These interfaces reshape mine planning requirements because they require controlled interaction zones, clear operating states, and safety protocols for mixed human-autonomous work [67–69].

A documented BHP Jimblebar collision between an autonomous haul truck and a manned water cart illustrates how intersection design, signage, communication protocols, and visual cues must be integrated into mine planning and safety design (see Figure 4) [66]. A separate recovery near-miss case shows the same planning issue from a communication perspective: ambiguous system state awareness and rigid fallback logic can expose personnel to moving autonomous equipment [70]. Current systems may also lack the informal cooperative behavior that human drivers use in mixed fleets; future AI-enabled coordination may reduce this limitation, but empirical validation remains limited [26,71]. Finally, remote supervision creates out-of-the-loop risks because camera feeds and sensor data may not convey full site context under dust, rain, sensor faults, or excessive operator trust [26,40].

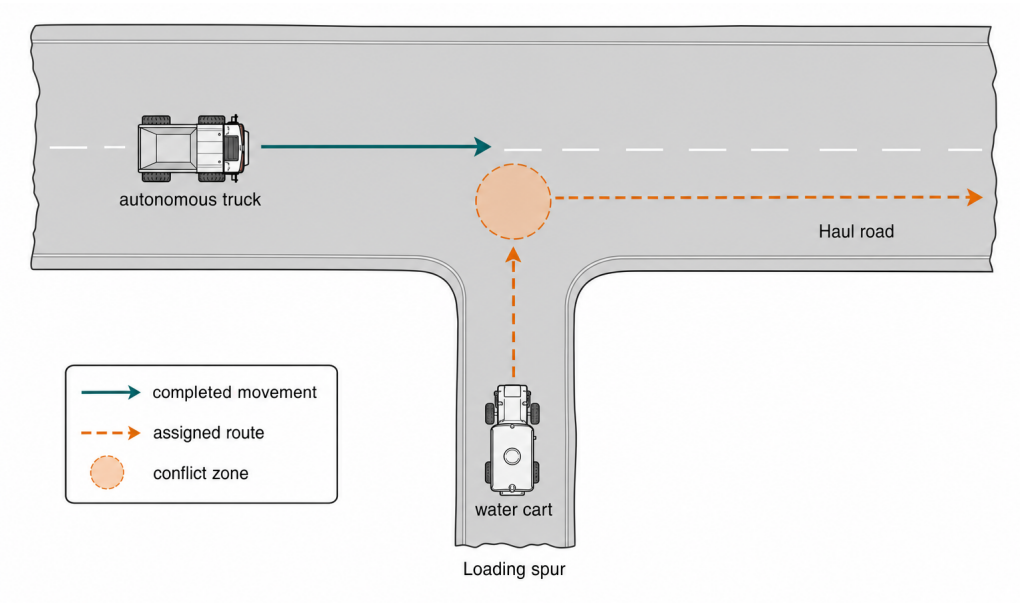

Figure 4. Schematic of an autonomous-truck and water-cart path-conflict scenario. Solid paths indicate completed movements and dashed paths indicate assigned or planned movements; scenario interpreted from [66].

To address complex human-autonomy risks, GMG advocates system safety engineering and human–systems integration throughout the system lifecycle [43]. This approach embeds human roles, competence requirements, interface design, and operational evaluation into AHS design rather than treating people as external to the automation system. Prior work similarly shows that successful deployment depends not only on installing and commissioning the technology, but also on ensuring that employees can competently interact with autonomous equipment [9,34].

Human–systems integration should therefore begin at the concept-of-operations stage and continue through design, testing, training, and evaluation so that safety objectives are verified iteratively and engineering education reflects the human–machine interaction demands of automated mining.

Building on this lifecycle approach, autonomous operating zones also require clear demarcation and controlled access points to prevent unauthorized entry into areas where autonomous trucks are operating [15]. Access-control systems, such as radio-frequency identification (RFID) tags for personnel and GPS-based monitoring for vehicles, can support safe and efficient operation while linking incident root causes to safer design and workforce planning.

4.4.4. Assessing and Mitigating Social Impact

Social impact considerations are also part of the mine planning changes associated with AHS deployment. Beyond technical adaptation, the introduction of autonomy reshapes workforce distribution, community engagement, and social license to operate—factors that directly influence project continuity and long-term economic stability. Stakeholder awareness, workforce transition risks, and structured change-management strategies are therefore relevant to training and implementation constraints.

Responsible AHS implementation must also account for social impacts because automation can reduce on-site roles, shift work to remote operation centers, and affect local or Indigenous communities if the transition is poorly managed [40,41]. Repetitive operational roles such as haul truck driving, drilling, and blasting are especially exposed, creating labor concerns that can delay deployment and threaten social license to operate [72,73]. Change management should therefore be treated as a strategic planning component, with retraining pathways into remote operations, maintenance diagnostics, and data-driven supervision embedded early enough to preserve operational knowledge and production stability [10,33,74].

4.5. Implications of AHSs on Haul-Road Design

Haul-road design must be re-optimized under autonomous operating conditions to balance safety, operational efficiency, and economic performance. This design problem also affects broader mine planning parameters because road width, gradient, curvature, and maintenance modeling require modification for effective AHS deployment.

Haul roads are not passive infrastructure in an AHS mine plan; they are part of the control environment in which autonomous trucks localize, perceive obstacles, brake, turn, queue, and interact with maintenance equipment. A haul-road framework that separates road provision into structural design, functional design, and maintenance management is useful for AHS planning because structural capacity controls pavement response to repeated and channelized wheel loads, functional design controls width, grade, curvature, sight distance, and traffic interaction, and maintenance management controls the surface condition that autonomous perception and braking systems rely on [24]. Incident evidence from autonomous haulage operations shows that wet or poor road conditions, obstacles, and road-maintenance interactions are frequent contributors to AHS events [26,70].

Accordingly, the design question is not only whether an autonomous route is wide enough for a truck to pass, but whether the route can maintain predictable geometry, drainage, rolling resistance, traction, and obstacle visibility over the life of the mine. Earlier road-safety and haul-road studies link deteriorated surfaces, ruts, drainage defects, and potholes to safety risk, tire damage, and maintenance demand [75–77]. Recent road-condition studies show that rolling resistance and road deterioration can be estimated from dispatch data, sensor-connected devices, on-board vibration response, UAV photogrammetry, and discrete-event simulation, linking road quality directly to productivity, fuel use, tire wear, and maintenance scheduling [25,78–81]. For AHSs, these methods should be treated as planning inputs because road deterioration can trigger speed restrictions, false obstacle detections, downtime, recovery work, and changes in achievable cycle time.

Conventional haul-road-width guidance is commonly built from truck width, traffic direction, berms, drainage, and operational clearance requirements [82,83]. AHS does not replace those requirements with a single wider-or-narrower rule. Instead, autonomy changes the trade-off that planners must test. Wider roads may improve perception margins, recovery space, mixed-traffic separation, and maintenance access [16]. Conversely, narrower or differentiated autonomous lanes may be feasible on segregated, digitally controlled routes and can reduce ramp excavation, highwall flattening, and stripping requirements [17,84]. These economic gains are constrained by the structural effects of channelized wheel loading and the need for higher drainage, pavement, and maintenance reliability [23,24]. Therefore, road width should be evaluated as a mine planning variable linking pit geometry, stripping ratio, road service life, rolling resistance, maintenance access, and autonomous safety performance rather than as a fixed geometric multiplier. Figure 5 shows the conventional two-lane road-width rule used as a baseline for this trade-off.

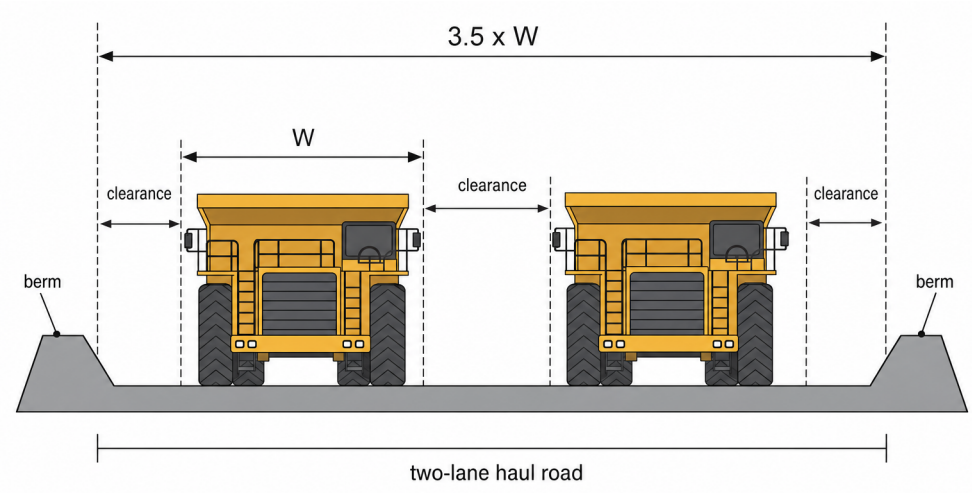

Figure 5. Haul-road operating-envelope schematic illustrating the two-lane traffic road-width recommendation of 3.5 times the width of the largest truck. Design criterion from [16].

This makes predictability the common objective behind apparently competing road-width recommendations. Segregated haulage routes, dedicated light-vehicle access, controlled turn lanes, and digitally enforced speed zones can reduce interaction uncertainty [9]. However, the same repeatability that improves autonomous path control also concentrates loading into narrower wheel paths, increasing the importance of structural design, material selection, rolling-resistance monitoring, and planned grading frequency [23–25]. Further empirical work is needed to determine where differentiated road networks can capture stripping-ratio benefits without increasing pavement deterioration, maintenance interference, or autonomous stoppages.

Autonomous haul trucks require precise and consistent road geometry [8], especially when navigating curves. Road sections transitioning into super-elevation must follow a controlled gradient to ensure safe turning dynamics, as illustrated in Figure 6 [15]. For example, at a speed of 56 km/h, a 5% transverse slope is recommended, with a total curve length of 60 m. Of this, roughly one-third (20 m) is used for slope adjustment at the curve's entrance and exit, and the remaining two-thirds (40 m) for the actual curve. This level of detail is critical because autonomous trucks lack the adaptive steering intuition of human drivers. Their reliance on pre-programmed paths and sensor-based navigation demands consistently constructed and maintained geometric features, such as banking (super-elevation) and curvature, to avoid stability issues, particularly at higher speeds.

The apparent disagreement between wider and narrower road recommendations should therefore be interpreted as a context-dependent design trade-off rather than a con-

tradiction [16,17,23,24,26,84]. Wider roads are more defensible where AHSs operate in mixed-traffic environments, where perception systems require additional clearance, where road-maintenance equipment must work alongside active haulage, or where communication and localization uncertainty remains high. Narrower roads are more defensible where autonomous routes are segregated, traffic rules are digitally enforced, operating speeds are controlled, pavement quality is high, and road-condition monitoring is continuous. A practical planning decision should therefore compare road-width scenarios using the combined effect on stripping ratio, payload productivity, pavement deterioration, rolling resistance, safety buffers, and maintenance downtime rather than selecting a single universal width. Table 4 summarizes the authors' synthesis of this cited evidence-weighting logic.

Table 4. Evidence-weighting framework for AHS haul-road-width decisions synthesized from the reviewed literature.

Design Option	Planning Benefit	Planning Risk or Constraint
Wider autonomous haul roads	Improves clearance, recovery space, perception margin, and compatibility with mixed traffic or road-maintenance interactions	Increases ramp excavation, may increase stripping ratio, and can reduce economic value in deep or geometry-constrained pits
Narrower autonomous haul roads	Can reduce waste movement, shorten ramp development, and improve pit economics where autonomous routes are segregated and predictable	Requires stronger pavement design, stricter drainage and maintenance, high-precision localization, and reliable exclusion of unexpected obstacles
Differentiated network design	Allows wider roads at intersections, loading areas, dumps, recovery zones, and mixed-traffic segments while narrowing controlled one-way or segregated segments	Requires more detailed traffic rules, digital zone management, and regular validation that operating assumptions remain valid

Road maintenance also becomes a production-planning issue. Poor road surfaces increase dust, rolling resistance, fuel use, tire wear, and equipment stress, while autonomous trucks have less human adaptability when loose material, potholes, standing water, or temporary maintenance equipment appears on route [25,70,85]. Discrete-event simulation evidence shows that ignoring temporary road deterioration can materially overestimate productivity and underestimate fuel consumption [81]. For AHS planning, road-maintenance windows, grader access, and road-condition monitoring should therefore be represented in the schedule and dispatch assumptions rather than treated as background operating practice.

Road-maintenance planning also remains a safety issue beyond productivity. Broader dump-truck safety guidance links road condition and traffic-control failures to fatal incidents [86], while structural reinforcement measures such as geosynthetics can improve support and reduce deformation where road foundations are weak or heavily loaded [87–89]. These measures are especially relevant for AHSs because autonomous trucks require repeatable surface quality and predictable stopping behavior.

Similarly, AHS route planning must account for wet road conditions, since wet and slippery surfaces have been identified as primary hazards for autonomous trucks [49,90]. Therefore, wet-season rainfall patterns should be embedded into AHS dispatch and route planning. Seasonal drainage redesign, ditching, crossfalls, and crown heights should also be incorporated into haul-road planning. Proper road drainage and frequent atmospheric monitoring provide controls that reduce the likelihood of loss-of-traction incidents. Sensor-based detection of standing water during wet seasons can also be integrated into AHS perception systems to enable rapid remediation and reduce vehicle downtime.

Abrupt speed-limit changes across a mine site can create loss-of-traction hazards for autonomous trucks [26]. Unlike human drivers, autonomous trucks may not anticipate upcoming speed-limit changes and adjust in advance, which introduces the risk of rapid braking. Gradual speed-transition zones throughout the AHS network can reduce this risk.

In light of these requirements, haulage planning for AHSs must also account for the system's ability to perceive and respond to surface-condition variability. A YOLOv4-based detection framework has been developed to identify negative obstacles on mining roads with high accuracy and real-time performance [91]. Such perception capabilities enable more reliable estimation of route accessibility and risk, which can be integrated into dispatch algorithms and mine planning models to minimize unexpected stoppages or re-routing delays.

Haul-road vertical curves and grades must also account for the unique braking dynamics of electric or hybrid autonomous trucks [15]. Traditional vertical alignment aims to ensure visibility and stopping distance, but in autonomous systems, this must be recalibrated to include machine perception, data processing latency, and automated braking actuation. ISO 3450 provides standardized test procedures for braking systems in earth-moving machinery, and braking distance for autonomous vehicles includes both physical braking and electronic reaction time [92]. Figure 7 summarizes how electronic reaction time contributes to overall stopping distance, underscoring the need to recalibrate vertical alignment and gradient tolerances under autonomous operating conditions. For heavy vehicles, pneumatic brake-pressure propagation and actuation delays can reach up to 300 ms in articulated configurations [93], and additional control or processing latency around 100 ms can measurably increase stopping distance [94]. This added complexity demands stricter road design tolerances, especially on slopes where gravitational forces further challenge safe stopping. From a mine planning standpoint, this implies the following:

- Maximum allowable gradients may need to be reduced in autonomous zones to comply with braking limitations.
- Vertical curve design must ensure that stopping distances are achievable even with electronic delay considered.
- Haul-road designs may require iterative simulation with OEM-specified vehicle models to ensure compliance with safety standards.

In addition to geometric and structural optimization, haul-road design must respond to environmental and climatic risks. Recent studies show that AHS adoption and extended mine lives intensify the need to incorporate environmental and climatic risks explicitly into surface mine haul-road design. Peer-reviewed studies and widely cited engineering guidelines emphasize that increased precipitation and flood events accelerate pavement deterioration through subgrade saturation, loss of bearing capacity, rutting, and erosion, necessitating improved drainage design, including adequate crossfall, ditching, culverts, and stormwater controls [88,95]. Freeze–thaw cycles have been shown to significantly reduce the strength and durability of haul-road materials, particularly unbound granular layers, prompting the use of frost-resistant aggregates, stabilization techniques, and thicker structural layers in cold-region surface mines [89]. Experimental and field studies further demonstrate that moisture-induced weakening and cyclic freeze–thaw damage increase maintenance demands and operational risk, which is especially critical for AHS operations that require consistent road geometry and surface conditions to ensure vehicle stability and sensor reliability [88]. Consequently, modern haul-road design increasingly adopts empirical approaches, climate-resilient materials, and conservative drainage criteria to ensure safe, predictable, and long-term performance under extreme weather conditions and autonomous operation requirements [89,95].

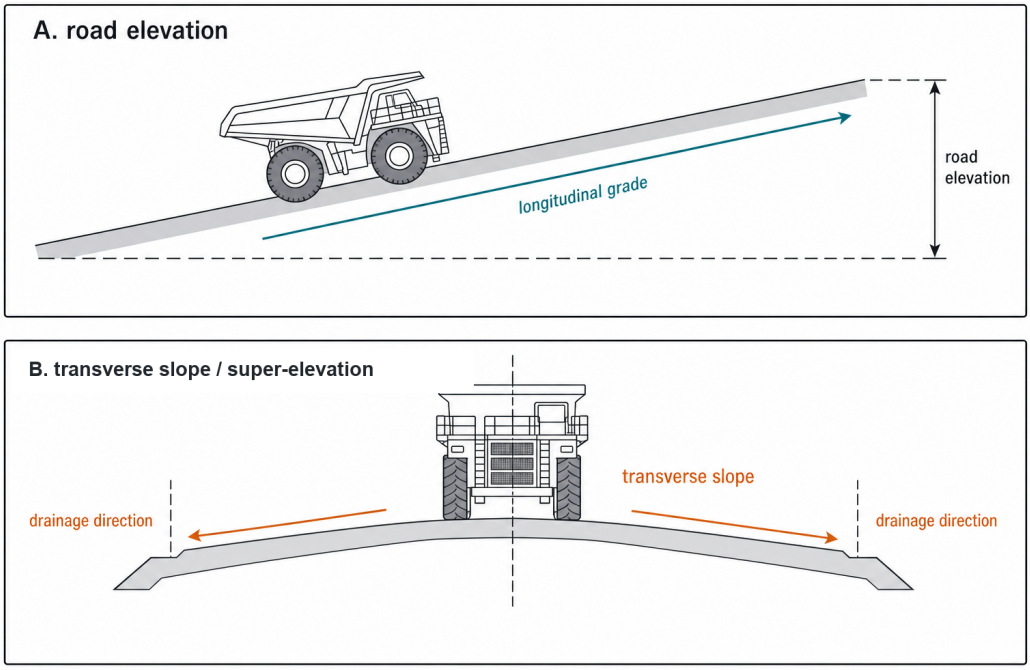

Figure 6. Schematic of longitudinal grade and transverse slope or super-elevation controls for autonomous haulage road design. Design concepts informed by [15].

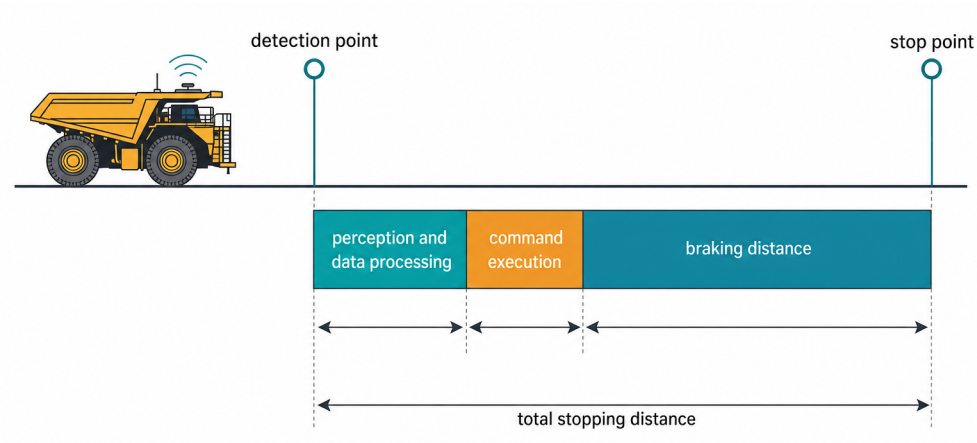

Figure 7. Timing-chain schematic for autonomous haul truck response and stopping distance. Conceptual components informed by [92].

5. Discussion

This review has explored the multifaceted implications of integrating autonomous haulage systems into surface mine planning for metal mines. While AHSs offer clear benefits in safety, productivity, and environmental performance, successful implementation requires reimagining traditional planning principles. Across the reviewed evidence, a central finding is that AHS integration requires new, dynamic planning methods rather than simple adjustment of conventional haulage assumptions. Key research needs include planning models that represent autonomous haulage as coupled constraints on pit geometry, haul-road design, scheduling, infrastructure readiness, and economic evaluation. These findings point to critical adjustments in haul-road geometry, communication infrastructure, control-room design, and operator workload balancing. Moreover, human–systems integration must be considered from the earliest phases of system deployment to mitigate risks introduced by the human-autonomy interface.

This planning interpretation is reinforced by incident-category evidence: road-condition events were the most frequently reported AHS hazard category (26.62%), followed by clean-up machine interaction (15.28%), road obstacles (10.88%), communications loss (8.65%), haul-road interaction (6.71%), and load-unit interaction (6.25%) [70]. These patterns show why road maintenance, traffic interaction, communication reliability, and access control must be planned together rather than treated as isolated operational issues.

5.1. Planning Variables and Optimization Implications

The findings indicate that AHSs should be treated as a mine planning variable rather than as a downstream equipment substitution. In conventional planning, haulage assumptions often enter the model through average cycle time, equipment availability, operating cost, and ramp geometry. With AHSs, these assumptions become more deterministic in some respects and more constrained in others. Driver-related variability in travel speed and path following is reduced, but new constraints arise from communication coverage, autonomous operating zones, sensor line-of-sight, loader interaction rules, road-maintenance windows, and safe access protocols for mixed manual–autonomous work. Consequently, mine planners should update not only the haulage cost model but also the optimization and scheduling logic used to translate design assumptions into production plans.

The consolidated findings in Table 3 indicate that AHS affects major planning variables through changes in pit geometry, haulage cost, fleet timing, and infrastructure dependencies. At the strategic level, AHS adoption influences ultimate pit limits, phase design, fleet strategy, and investment timing through changed haulage costs, road geometry, and capital requirements. In Lerchs–Grossmann (LG)-style pit-limit analysis, AHS effects enter primarily through modified block economic values, including haulage cost, road-width implications, and equipment productivity assumptions [96]. In contrast, Direct Block Scheduling (DBS) and other time-indexed production scheduling methods can represent AHSs more explicitly by incorporating autonomous-zone commissioning dates, ramp availability, fleet ramp-up constraints, communication infrastructure dependencies, and phase-specific traffic restrictions [97]. Therefore, AHS adoption has an indirect effect on ultimate-pit-limit optimization but a more direct effect on scheduling, phase sequencing, and short-interval operational control.

The operations-management implication is that AHS adoption does not eliminate bottlenecks; it changes where bottlenecks occur and how they should be modeled. More repeatable autonomous cycle times can improve dispatch predictability, but queues may still form at loaders, dumps, narrow intersections, charging or fueling locations, maintenance interfaces, and recovery zones. Recent scheduling studies for autonomous mining trucks demonstrate the relevance of real-time scheduling, flow allocation, and metaheuristic optimization for this problem class [27,28]. For planning purposes, these tools should be paired with discrete-event simulation and sensitivity analysis so that deterministic truck motion is not mistaken for deterministic system performance [81,98]. A practical planning workflow should therefore compare candidate designs under variations in loader service time, road-condition restrictions, communication outages, maintenance activity, and mixed-fleet interactions.

The economic trade-off is similarly site-specific. AHSs can reduce exposure to safety risk, labor requirements, and cycle-time variability, while improving utilization and fuel or energy efficiency [9,16]. However, these operating benefits must be evaluated against the additional capital cost of autonomous trucks or retrofit kits, network infrastructure, high-precision mapping, control rooms, cybersecurity, training, validation, and higher road-maintenance standards. The relevant economic question is therefore not simply whether AHS adoption lowers unit haulage cost, but whether the net present value (NPV) of reduced

OPEX, productivity gains, and risk reduction exceeds the upfront and sustaining CAPEX required for autonomy. This reinforces the need for scenario-based CAPEX–OPEX analysis, especially when comparing greenfield designs, where autonomous haulage can be embedded from the initial pit and infrastructure layout, with brownfield deployments, where the value case depends strongly on retrofit cost, transition downtime, and mixed-traffic risk. In AHS deployment planning, Critical Path Method (CPM) and Program Evaluation and Review Technique (PERT) terminology describes project-scheduling methods that map task dependencies, identify critical activities, and estimate deployment timing under uncertainty.

5.2. Economic Evaluation and Deployment Pathways

The reviewed literature reports several economic drivers for AHS adoption, including higher utilization, longer operating hours, reduced labor exposure, improved fuel performance, and more predictable production [10,11,16]. These benefits, however, are not sufficient by themselves to justify implementation because AHS also shifts cost into capital-intensive enabling systems. Mine planning evaluations should therefore compare conventional and autonomous cases using a full life-of-mine economic framework rather than isolated unit-cost indicators. At a minimum, the AHS case should include initial CAPEX, sustaining CAPEX, transition cost, OPEX savings, productivity effects, risk-reduction value, and road-maintenance impacts.

Table 5 summarizes an author-defined economic evaluation structure for AHS deployment. The framework separates costs that occur before autonomous production begins from recurring costs and benefits that affect life-of-mine value. This distinction is important because early AHS investment may reduce future operating cost but can also delay production, require temporary mixed-fleet operation, or force earlier infrastructure upgrades.

For greenfield projects, the economic case can be embedded from the first planning iteration by designing haul routes, communication coverage, autonomous zones, and maintenance access as part of the base mine design. This allows pit optimization and production scheduling to test autonomous and conventional alternatives before major infrastructure is fixed. Brownfield projects require a different evaluation because the main economic risks are retrofit cost, production disruption, mixed-traffic exposure, workforce transition, and staged commissioning. In these cases, CPM- or PERT-style implementation schedules should be linked to production schedules so that the cost of delayed autonomous readiness is visible in the economic model.

Beyond the investment case, the same integration requirement appears in haul-road design. Taken together, the haul-road literature indicates that AHS road design should be treated as an integrated structural, functional, and maintenance-management problem rather than as a road-width question alone [24]. Wider roads can improve perception and recovery margins, while narrower or differentiated lanes can improve pit economics where autonomous routes are segregated and well controlled [16,17,84]. The limiting conditions are pavement response to channelized loading, rolling resistance, drainage, seasonal friction, autonomous braking distance, and real-time road-condition information from dispatch data, sensors, UAVs, or perception models [23,25,81,91].

Beyond pit geometry, AHS reshapes workforce and human-interface planning by shifting work from manual driving toward remote supervision, data analysis, maintenance diagnostics, and system integration [33,34,40]. These changes improve physical safety but introduce cognitive overload, trust complacency, situational-awareness loss, job-displacement concerns, and new training requirements [5,26,40]. The literature therefore calls for empirical validation of ergonomic control centers, predictive staffing models, human–systems integration, and workforce transition strategies [15,35,43].

The human-autonomy interface also remains a planning risk during maintenance, inspection, recovery, and emergency work [26,67,68]. Incidents involving poor communication, ambiguous system states, rigid fallback behavior, and inadequate intersection design show that autonomous-zone rules, road geometry, communication protocols, and cybersecurity controls must be planned together rather than treated as separate operating procedures [15,31,43,66,70].

Table 5. Author-defined CAPEX–OPEX framework for economic evaluation of AHS deployment.

Economic Category	Typical AHS-Related Items	Planning Implication
Initial CAPEX	Autonomous-ready trucks or retrofit kits; communication network; control room; positioning infrastructure; high-precision mapping; system integration and cybersecurity	Must be included in investment timing, phase sequencing, and NPV sensitivity analysis
Sustaining CAPEX	Network upgrades; software and hardware refreshes; sensor replacement; road reconstruction; control-system redundancy	Should be modeled across the life of mine rather than treated as a one-time automation premium
Transition and commissioning cost	Validation trials; temporary production losses; mixed-fleet controls; training; change management; emergency-response drills	Particularly important in brownfield mines where retrofit work can interrupt existing production
OPEX reductions	Lower in-cab labor exposure; higher truck utilization; reduced cycle-time variability; potential fuel or energy savings; improved safety performance	Should be tested against site-specific labor, fuel, maintenance, and production assumptions
OPEX increases or offsets	Software support; specialist technicians; road maintenance; communication-system maintenance; cybersecurity monitoring; control-room staffing	Can offset expected savings if road and system maintenance is underestimated
Economic upside	Improved production predictability; reduced safety exposure; possible road-width or stripping-ratio benefits; improved dispatch consistency	Should be evaluated through scenario analysis rather than assumed as a fixed percentage benefit

5.3. Limitations

Several methodological limitations should be acknowledged. First, the review protocol was not prospectively registered, as this engineering review does not fall within the health-intervention scope typically associated with PROSPERO registration. Second, although screening decisions were reconciled through author discussion, no formal inter-rater reliability statistic was calculated. Third, a quantitative meta-analysis was not conducted because the included studies do not report a common effect size or consistent outcome measures; instead, they combine design guidance, simulation outcomes, case-based evidence, incident classifications, and implementation reports. For the same reason, clinical intervention tools such as RoB 2, ROBINS-I, and GRADE were not used as formal scoring instruments. These limitations are addressed by making the search logic, screening criteria, extraction fields, source categories, and synthesis boundaries explicit.

The geographic scope of the review also limits transferability. The synthesis deliberately emphasized jurisdictions and regions with substantial published AHS evidence, including Australia, Canada, South America, and the United States. This emphasis reflects evidence availability and adoption maturity: these regions have longer operational histories with autonomous haulage, more documented regulatory and industry guidance, and more accessible historical data from which planning implications can be inferred. As a result, the findings are most directly transferable to large surface metal mines with

mature regulatory systems, established digital infrastructure, and high-capacity equipment fleets. The selected regions should therefore be interpreted as evidence-rich cases rather than universal templates. Application to smaller operations, underground mines, coal and quarry settings, or jurisdictions with different labor markets, regulatory maturity, communications infrastructure, and climate constraints should therefore be treated as a site-specific adaptation rather than a direct transfer of the planning recommendations.

Quantitative risk-tolerance thresholds and real-time risk-communication practices remain unresolved evidence gaps because the reviewed literature did not provide sufficient comparable evidence. In this review, these topics are treated as implementation constraints affecting human–systems integration, communication infrastructure, road-condition monitoring, and future empirical validation.

6. Future Work

Future work should formalize AHS-specific mine planning standards for road width, curvature, intersections, stopping distance, communication coverage, mixed-traffic control, road-condition monitoring, and maintenance access. The highest-priority research need is empirical comparison of alternative haul-road scenarios, including wider roads, narrower segregated lanes, and differentiated networks, with explicit measurement of stripping ratio, rolling resistance, pavement deterioration, safety events, and production performance. Additional studies should validate human–systems integration, workforce transition strategies, cybersecurity controls, and AI-supported dispatch or road-condition models under real mine conditions.

7. Conclusions

This review shows that autonomous haulage systems should be incorporated into surface mine planning as a planning condition across strategic, tactical, and operational horizons, rather than treated only as a downstream fleet replacement. The evidence reviewed indicates that AHS adoption affects haul-road geometry and maintenance, communication and positioning infrastructure, control-room and workforce requirements, traffic rules, production scheduling, dispatch logic, and economic evaluation. These effects mean that autonomy changes both the physical mine design and the assumptions used to translate that design into production and financial outcomes.

The central planning implication is that AHS adoption creates site-specific trade-offs rather than universal design rules. For example, wider haul roads may improve perception reliability, mixed-traffic management, and safety margins, whereas narrower roads may reduce stripping requirements and improve pit economics if pavement performance, drainage, stopping distance, and maintenance demands are adequately controlled. Similarly, more repeatable autonomous-truck motion can improve cycle-time predictability, but system performance remains sensitive to loader service time, road restrictions, communication outages, maintenance windows, and mixed-fleet interactions. Therefore, AHS evaluations should combine pit and phase design, DBS or short-term scheduling, dispatch simulation, queuing analysis, and scenario-based CAPEX–OPEX assessment.

The review also confirms that the current evidence base remains uneven. Published work is concentrated in a limited number of mining regions and combines peer-reviewed studies, standards, guidelines, case reports, and vendor or industry evidence. As a result, the planning recommendations should be applied through site-specific validation rather than transferred mechanically across commodities, climates, regulatory systems, and mine scales. Future empirical studies should quantify AHS effects on road design, production scheduling, infrastructure readiness, workforce transition, and life-of-mine value so that autonomous haulage can be represented more rigorously in mine planning models.

Supplementary Materials: The following supporting information can be downloaded at https://www.mdpi.com/article/10.3390/mining6030048/s1. PRISMA 2020 checklist (Supplementary File S1).

Author Contributions: Conceptualization, T.B.C., N.R. and M.M.; methodology, T.B.C.; formal analysis, T.B.C.; investigation, T.B.C.; resources, T.B.C., N.R. and M.M.; data curation, T.B.C.; writing—original draft preparation, T.B.C.; writing—review and editing, T.B.C., T.B., N.R., T.V.B., A.A. and M.M.; visualization, T.B.C.; supervision, N.R. and M.M.; project administration, N.R. and M.M.; funding acquisition, M.M. All authors have read and agreed to the published version of the manuscript.

Funding: This research was funded by the National Institute for Occupational Safety and Health (NIOSH), contract number 75D30124C20307.

Data Availability Statement: No new data were created or analyzed in this study. Data sharing is not applicable to this article.

Acknowledgments: The authors utilized generative artificial intelligence (AI) tools, including OpenAI ChatGPT (GPT-5 version), to assist with minor grammatical refinement, stylistic editing, and figure visualization development. AI tools were not used for data generation, data analysis, interpretation of results, or the formulation of scientific conclusions. All technical content, methodological decisions, and analytical interpretations were independently developed and verified by the authors.

Conflicts of Interest: The authors declare no conflicts of interest. The funders had no role in the design of the study; in the collection, analyses, or interpretation of data; in the writing of the manuscript; or in the decision to publish the results.

References

1. Chen, L.; Li, Y.; Silamu, W.; Li, Q.; Ge, S.; Wang, F.Y. Smart Mining with Autonomous Driving in Industry 5.0: Architectures, Platforms, Operating Systems, Foundation Models, and Applications. *IEEE Trans. Intell. Veh.* **2024**, *9*, 4383–4393. [CrossRef]
2. Radebe, N.T.; Chipangamate, N.S. Mining industry risks, and future critical minerals and metals supply chain resilience in emerging markets. *Resour. Policy* **2024**, *91*, 104887. [CrossRef]
3. Strzałkowski, P.; Woźniak, J.; Górniak-Zimroz, J.; Delijewska, B.; Bęś, P.; Solatycka, D.; Janiszewski, M. Identification and systematics of safety hazards in surface rock mining. *Sci. Rep.* **2025**, *15*, 30492. [CrossRef] [PubMed]
4. Kasap, Y.; Subaşi, E. Risk assessment of occupational groups working in open pit mining: Analytic Hierarchy Process. *J. Sustain. Min.* **2017**, *16*, 38–46. [CrossRef]
5. Long, M.; Schafrik, S.; Kolapo, P.; Agioutantis, Z.; Sottile, J. Equipment and Operations Automation in Mining: A Review. *Machines* **2024**, *12*, 713. [CrossRef]
6. Asare, B.Y.A.; Kwasnicka, D.; Powell, D.; Robinson, S. Health and well-being of rotation workers in the mining, offshore oil and gas, and construction industry: A systematic review. *BMJ Glob. Health* **2021**, *6*, e005112. [CrossRef] [PubMed]
7. Shahirpour, A.; Reuscher, T. Design and Experimental Evaluation of Model Predictive Control for Autonomous Articulated Dump Trucks. *Min. Metall. Explor.* **2025**, *42*, 1975–1987. [CrossRef]
8. Lööw, J.; Johansson, J. Eight Conditions That Will Change Mining Work in Mining 4.0. *Mining* **2024**, *4*, 904–912. [CrossRef]
9. Humphrey, J.; Smith, C. Autonomous and Semi-Autonomous Equipment. In *SME Surface Mining Handbook*; Darling, P., Ed.; Society for Mining, Metallurgy & Exploration: Englewood, CO, USA, 2023; Chapter 14, pp. 289–305.
10. Voronov, Y.; Voronov, A.; Makhambayev, D. Current State and Development Prospects of Autonomous Haulage at Surface Mines. *E3S Web Conf.* **2020**, *174*, 01028. [CrossRef]
11. Caldas, K.A.; Barbosa, F.M.; da Silva, J.A.R.; Dos Santos, T.C.; Gomes, I.P.; Rosero, L.A.; Wolf, D.F.; Grassi, V., Jr. Autonomous Driving of Trucks in Off-Road Environment. *J. Control. Autom. Electr. Syst.* **2023**, *34*, 1179–1193. [CrossRef]
12. Clark, L.; Dagdelen, K. Practical Mine Planning and Design. In *SME Surface Mining Handbook*; Darling, P., Ed.; Society for Mining, Metallurgy & Exploration: Englewood, CO, USA, 2023; Chapter 3, pp. 29–68.
13. Freeport-McMoRan Inc. *Annual Report on Sustainability*; Technical report; Freeport-McMoRan Inc.: Phoenix, AZ, USA, 2023.
14. Goli, M.; Moniri-Morad, A.; Aguilar, M.; Shishvan, M.S.; Shahsavar, M.; Sattarvand, J. A Simulation-Based Risk Assessment Model for Comparative Analysis of Collisions in Autonomous and Non-Autonomous Haulage Trucks. *Appl. Sci.* **2025**, *15*, 9702. [CrossRef]
15. Benlaajili, S.; Moutaouakkil, F.; Chebak, A. Infrastructural Requirements for the Implementation of Autonomous Trucks in Open-Pit Mines. *Proc. E3S Web Conf.* **2021**, *315*, 03009. [CrossRef]

16. Price, R.; Cornelius, M.; Burnside, L.; Miller, B. Mine Planning and Selection of Autonomous Trucks. In *Proceedings of the 28th International Symposium on Mine Planning and Equipment Selection—MPES 2019*; Topal, E., Ed.; Springer: Berlin/Heidelberg, Germany, 2020; pp. 203–212. [CrossRef]
17. Owens, R. Adapting Open Pit Mine Design Fundamentals to Leverage the Advantages of Autonomous Haulage Systems. Master's Thesis, Montana Technological University, Butte, MT, USA, 2021.
18. Global Mining Guidelines Group. *Guideline for the Implementation of Autonomous Systems in Mining*; Technical report; Global Mining Guidelines Group: Châteauguay, QC, Canada, 2024.
19. Page, M.J.; McKenzie, J.E.; Bossuyt, P.M.; Boutron, I.; Hoffmann, T.C.; Mulrow, C.D.; Shamseer, L.; Tetzlaff, J.M.; Akl, E.A.; Brennan, S.E.; et al. The PRISMA 2020 Statement: An Updated Guideline for Reporting Systematic Reviews. *BMJ* **2021**, *372*, n71. [CrossRef] [PubMed]
20. Tubis, A.; Werbińska-Wojciechowska, S.; Wroblewski, A. Risk Assessment Methods in Mining Industry–A Systematic Review. *Appl. Sci.* **2020**, *10*, 5172. [CrossRef]
21. Aghdamigargari, M.; Avane, S.; Anani, A.; Adewuyi, S.O. Sustainability in Long-Term Surface Mine Planning: A Systematic Review of Operations Research Applications. *Sustainability* **2024**, *16*, 9769. [CrossRef]
22. Sizemov, D.N.; Temkin, I.O.; Deryabin, S.A.; Vladimirov, D.Y. On Some Aspects of Increasing the Target Productivity of Unmanned Mine Dump Trucks. *Eurasian Min.* **2021**, *36*, 68–73. [CrossRef]
23. Thompson, R.J. Mine Road Design and Management in Autonomous Hauling Operations—A Research Roadmap. In *Proceedings of the Second International Future Mining Conference 2011, Sydney, NSW, Australia, 22–23 November 2011*; AusIMM: Carlton, VIC, Australia 2011; pp. 95–102.
24. Thompson, R.J.; Peroni, R.; Visser, A.T. *Mining Haul Roads: Theory and Practice*; CRC Press/Balkema: Leiden, The Netherlands, 2019. [CrossRef]
25. Alegre, D.; Peroni, R.d.L.; Aquino, E.d.R.; Dille, F. A Method to Assess Haul Roads Rolling Resistance Using Dispatch System Data. *Min. Technol.* **2021**, *130*, 176–187. [CrossRef]
26. Pascoe, T.; Mcgough, S.; Jansz, J. The experiences of mineworkers interacting with driverless trucks: Risks, trust and teamwork. *World Saf. J.* **2022**, *31*, 19–40.
27. Zhang, X.; Guo, A.; Ai, Y.; Tian, B.; Chen, L. Real-Time Scheduling of Autonomous Mining Trucks via Flow Allocation-Accelerated Tabu Search. *IEEE Trans. Intell. Veh.* **2022**, *7*, 466–479. [CrossRef]
28. Fang, Y.; Peng, X. Micro-Factors-Aware Scheduling of Multiple Autonomous Trucks in Open-Pit Mining via Enhanced Metaheuristics. *Electronics* **2023**, *12*, 3793. [CrossRef]
29. Cyber-Physical Systems Public Working Group; Smart Grid and Cyber-Physical Systems Program Office; Engineering Laboratory. *Framework for Cyber-Physical Systems, Release 1.0*; Technical Report NIST Special Publication 1500-201; U.S. Department of Commerce: Gaithersburg, MD, USA, 2017.
30. Tubis, A.A.; Werbińska-Wojciechowska, S.; Góralczyk, M.; Wróblewski, A.; Ziętek, B. Cyber-Attacks Risk Analysis Method for Different Levels of Automation of Mining Processes in Mines Based on Fuzzy Theory Use. *Sensors* **2020**, *20*, 7210. [CrossRef] [PubMed]
31. Gaber, T.; El Jazouli, Y.; Eldesouky, E.; Ali, A. Autonomous Haulage Systems in the Mining Industry: Cybersecurity, Communication and Safety Issues and Challenges. *Electronics* **2021**, *10*, 1357. [CrossRef]
32. Gao, Y.; Ai, Y.; Tian, B.; Chen, L.; Wang, J.; Cao, D.; Wang, F.Y. Parallel End-to-End Autonomous Mining: An IoT-Oriented Approach. *IEEE Internet Things J.* **2020**, *7*, 1011–1023. [CrossRef]
33. Chirgwin, P. Skills development and training of future workers in mining automation control rooms. *Comput. Hum. Behav. Rep.* **2021**, *4*, 100115. [CrossRef]
34. Lund, E.; Pekkari, A.; Johansson, J.; Lööw, J. Mining 4.0 and its effects on work environment, competence, organisation and society – a scoping review. *Miner. Econ.* **2024**, *37*, 827–840. [CrossRef]
35. Burgess-Limerick, R.; Horberry, T.; Lynas, D.; Hill, A.; Haight, J.M. *Human Systems Integration for Mining Automation*, 1st ed.; CRC Press: Boca Raton, FL, USA, 2025. [CrossRef]
36. Ali, D.; Frimpong, S. DeepHaul: A deep learning and reinforcement learning-based smart automation framework for dump trucks. *Prog. Artif. Intell.* **2021**, *10*, 157–180. [CrossRef]
37. Kaur, D. "The impact of autonomous vehicles on mining operations: Enhancing safety and productivity through technological advancements". *Sch. Rev. J.* **2024**, *SR Online: Showcase*, Equinox 2024. [CrossRef]
38. Mugebe, P.; Kizil, M.S.; Yahyaei, M.; Low, R. Foundation of a framework for evaluating the impact of mining technological innovation on a company's market value. *Resour. Policy* **2023**, *85*, 103913. [CrossRef]
39. Yaghini, A.; Hall, R.A.; Apel, D.B. Autonomous and Operator-Assisted Electric Rope Shovel Performance Study. *Mining* **2022**, *2*, 699–711. [CrossRef]
40. Codoceo-Contreras, L.; Rybak, N.; Hassall, M. Exploring the impacts of automation in the mining industry: A systematic review using natural language processing. *Min. Technol.* **2024**, *133*, 191–213. [CrossRef]

41. Rogers, W.P.; Kahraman, M.M.; Drews, F.A.; Powell, K.; Haight, J.M.; Wang, Y.; Baxla, K.; Sobalkar, M. Automation in the Mining Industry: Review of Technology, Systems, Human Factors, and Political Risk. *Min. Metall. Explor.* **2019**, *36*, 607–631. [CrossRef]
42. Temkin, I.; Myaskov, A.; Deryabin, S.; Konov, I.; Ivannikov, A. Design of a Digital 3D Model of Transport–Technological Environment of Open-Pit Mines Based on the Common Use of Telemetric and Geospatial Information. *Sensors* **2021**, *21*, 6277. [CrossRef] [PubMed]
43. Global Mining Guidelines Group. *System Safety for Autonomous Mining Guideline*; Technical Report GMG-AM-SS-v01; Global Mining Guidelines Group (GMG): Montreal, QC, Canada, 2023.
44. Guo, L.; Guo, Y.; Liu, J.; Zhang, Y.; Song, Z.; Zhang, X.; Liu, H. A Semi-Supervised Domain Adaptation Method for Sim2Real Object Detection in Autonomous Mining Trucks. *Sensors* **2025**, *25*, 1425. [CrossRef] [PubMed]
45. Li, X.; Zhang, X.; Ren, X.; Fritsche, M.; Wickert, J.; Schuh, H. Precise positioning with current multi-constellation Global Navigation Satellite Systems: GPS, GLONASS, Galileo and BeiDou. *Sci. Rep.* **2015**, *5*, 8328. [CrossRef] [PubMed]
46. Ralston, J.; Reid, D.; Hargrave, C.; Hainsworth, D. Sensing for advancing mining automation capability: A review of underground automation technology development. *Int. J. Min. Sci. Technol.* **2014**, *24*, 305–310. [CrossRef]
47. Teng, S.; Li, L.; Li, Y.; Hu, X.; Li, L.; Ai, Y.; Chen, L. FusionPlanner: A multi-task motion planner for mining trucks via multi-sensor fusion. *Mech. Syst. Signal Process.* **2024**, *208*, 111051. [CrossRef]
48. Hyder, Z.; Siau, K.; Nah, F. Artificial Intelligence, Machine Learning, and Autonomous Technologies in Mining Industry. In *Research Anthology on Cross-Disciplinary Designs and Applications of Automation*; IGI Global: Hershey, PA, USA, 2022; pp. 478–492. [CrossRef]
49. Tlhatlhetji, M.; Kolapo, P. Investigating the effects of rainy season on open cast mining operation: The case of Wescoal Khanyisa Colliery. *Res. Sq.* **2021**, *Preprint*. [CrossRef] [PubMed]
50. Modular Mining. *Remote Component Monitoring Helps Peruvian Mine Improve MTBF and Reduce Unplanned Maintenance*; Case study; Komatsu: Milwaukee, WI, USA, 2021.
51. Dudley, J.J.; McAree, P.R. Why the mining industry needs a reference architecture for automation initiatives. In *Proceedings of the 2013 IEEE/ASME International Conference on Advanced Intelligent Mechatronics*; IEEE: New York, NY, USA, 2013; pp. 1792–1797. [CrossRef]
52. Wu, B.; Bai, J.; Ling, Z.; Zhou, Z.; Wang, F.; Hu, S.; Liu, A. The Safety Design Suggestions of Autonomous Mine Transportation System. In *Proceedings of the IEEE 5th International Conference on Intelligent Transportation Engineering (ICITE)*; IEEE: New York, NY, USA, 2020; pp. 388–392. [CrossRef]
53. Kulshrestha, S.; Acharya, N.; Mathur, K.; Pandey, T. Legal Framework and Regulatory Compliance in Metal Mining - An Analysis of Environmental and Operational Standards. *J. Mines Met. Fuels* **2024**, *72*, 1035–1047. [CrossRef]
54. Ge, S.; Wang, F.Y.; Yang, J.; Ding, Z.; Wang, X.; Li, Y.; Teng, S.; Liu, Z.; Ai, Y.; Chen, L. Making Standards for Smart Mining Operations: Intelligent Vehicles for Autonomous Mining Transportation. *IEEE Trans. Intell. Veh.* **2022**, *7*, 413–416. [CrossRef]
55. Luxbacher, K.; Miller, H.; Moats, M.; Savit, M.; Miller, B.; Le Vier, M.; Parratt, R.L.; Kanagy, D.L. *Eliminating Barriers for the Implementation of Automation in the Mining Industry*; Unpublished presentation; CDC/NIOSH Contract 75D30122C14149. Presented 10 October 2024; University of Arizona and National Institute for Occupational Safety and Health (NIOSH): Tucson, AZ, USA, 2024.
56. Ondov, M.; Saderova, J.; Sofrankova, A.; Horizral, L.; Kačmáry, P. Transport System Digitalization in the Mining Industry. *Sustainability* **2025**, *17*, 6038. [CrossRef]
57. Daruka, Y.; Basu, A. *Transforming India's Mining Landscape with Autonomous Technology*; PwC India—Research & Insights Hub: Hyderabad, India, 2024.
58. Gleason, W. Autonomous haulage growing fast. *Min. Eng.* **2018**, *70*, 28–31.
59. Albus, J.; Quintero, R.; Huang, H.M.; Roche, M. *Mining Automation Real-Time Control System Architecture Standard Reference Model (MASREM)*; NIST Technical Note 1261; National Institute of Standards and Technology (NIST): Gaithersburg, MD, USA, 1998; Volume 1.
60. Department of Mines and Petroleum, Resources Safety Division. *Code of Practice: Safe Mobile Autonomous Mining in Western Australia*; Department of Mines and Petroleum, Resources Safety, Western Australia: East Perth, WA, Australia, 2015.
61. *ISO 17757:2019*; Earth-Moving Machinery and Mining—Autonomous and Semi-Autonomous Machine System Safety. International Organization for Standardization: Geneva, Switzerland, 2019.
62. Gendler, S.G.; Tumanov, M.V.; Levin, L.Y. Principles for selecting, training and maintaining skills for safe work of personnel for mining industry enterprises. *Nauk. Visnyk Natsionalnoho Hirnychoho Universytetu* **2021**, *2*, 156–162. [CrossRef]
63. Sustainable Minerals Institute, The University of Queensland. *Human Aspects of Automation and New Technology in Mining: Integrating People and Technology Through Human-Centred Design*; Technical report, ACARP C34026; The University of Queensland: St Lucia, QLD, Australia, 2024.
64. Beesley, R. *Human Factors in Autonomous Haulage: Challenges in Operations and Workforce Development*; Holmes Safety Association Presentation: Burke, VA, USA, 2021.

65. Li, J.; Li, H.; Wang, H.; Umer, W.; Fu, H.; Xing, X. Evaluating the impact of mental fatigue on construction equipment operators' ability to detect hazards using wearable eye-tracking technology. *Autom. Constr.* **2019**, *105*, 102835. [CrossRef]
66. Burgess-Limerick, R.; Horberry, T.; Lynas, D.; Hill, A.; Haight, J.M. Human Aspects of Mining Automation. In *Human Systems Integration for Mining Automation*, 1st ed.; CRC Press: Boca Raton, FL, USA, 2025; p. 8. [CrossRef]
67. Hassall, M.; Seligmann, B.; Lynas, D.; Haight, J.; Burgess-Limerick, R. Predicting Human-System Interaction Risks Associated with Autonomous Systems in Mining. In *Proceedings of the Human Factors in Robots, Drones and Unmanned Systems*; AHFE (2022) International Conference; Ahram, T.; Karwowski, W., Eds.; AHFE Open Access: Honolulu, HI, USA, 2022; Volume 57. [CrossRef]
68. Chen, L.; Xie, Y.; He, Y.; Ai, Y.; Tian, B.; Li, L.; Ge, S.; Wang, F.Y. Autonomous mining through cooperative driving and operations enabled by parallel intelligence. *Commun. Eng.* **2024**, *3*, 75. [CrossRef]
69. França, J.E.M.; Hollnagel, E. Analyzing human factors and complexities of mining and O&G process accidents using FRAM: Copiapó (Chile) and FPSO CSM (Brazil) cases. *Process Saf. Prog.* **2023**, *42*, S9–S18. [CrossRef]
70. Pascoe, T.; McGough, S.; Jansz, J. From truck driver awareness to obstacle detection: A tiger never changes its stripes. *World Saf. J.* **2022**, *31*, 15–28. [CrossRef]
71. Ubhe, M.P.; Samant, R.M. AGI via Multi-Agent Systems: Towards a Scalable and Adaptive Intelligence Model. *Int. J. Comput. Appl.* **2025**, *187*, 21–27. [CrossRef]
72. Mining Industry Human Resources Council. *The Changing Nature of Work: Innovation, Automation and Canada's Mining Workforce*; Mining Industry Human Resources Council (MiHR): Kanata, ON, Canada, 2020.
73. Mitchell, P.; Beifus, A.; Yameogo, T.; Downham, L. *Top 10 Business Risks and Opportunities for Mining and Metals in 2024*; EY Global Mining & Metals: London, UK, 2024.
74. Lööw, J.; Abrahamsson, L.; Johansson, J. Mining 4.0—the Impact of New Technology from a Work Place Perspective. *Min. Metall. Explor.* **2019**, *36*, 701–707. [CrossRef]
75. Sagberg, F.; Piccinini, G.; Engström, J. A review of research on driving styles and road safety. *Hum. Factors J. Hum. Factors Ergon. Soc.* **2015**, *57*, 1248–1275. [CrossRef] [PubMed]
76. Benevenuti, F.; Peroni, R. Detecting drainage pitfalls in open-pit mines and haul roads using UAV-photogrammetry. *Dyna* **2021**, *88*, 190–195. [CrossRef]
77. Shakenov, A.; Sładkowski, A.; Stolpovskikh, I. Haul road condition impact on tire life of mining dump truck. *Nauk. Visnyk Natsionalnoho Hirnychoho Universytetu* **2022**, *6*, 25–29. [CrossRef]
78. Kim, H.; Lee, W.H.; Lee, C.H.; Kim, S.M. Development of Monitoring Technology for Mine Haulage Road through Sensor-Connected Digital Device and Smartphone Application. *Appl. Sci.* **2022**, *12*, 12166. [CrossRef]
79. Heyns, T.; Heyns, P.; de Villiers, J. A method for real-time condition monitoring of haul roads based on Bayesian parameter estimation. *J. Terramechanics* **2012**, *49*, 103–113. [CrossRef]
80. Douglas, A.; Langenderfer, M.; Johnson, C. Road Condition Monitoring Utilizing UAV Photogrammetry Aligned to Principal Curve of Mine Haul Truck Path. *Min. Metall. Explor.* **2024**, *41*, 61–72.
81. Meneses, D.; Sepúlveda, F.D. Modeling Productivity Reduction and Fuel Consumption in Open-Pit Mining Trucks by Considering the Temporary Deterioration of Mining Roads through Discrete-Event Simulation. *Mining* **2023**, *3*, 96–105. [CrossRef]
82. Mine Safety and Health Administration (MSHA). *Haul Road Inspection Handbook*; Mine Safety and Health Administration: Washington, DC, USA, 2000.
83. U.S. Mine Safety and Health Administration (MSHA). 30 CFR 56.9300: Berms or Guardrails. Electronic Code of Federal Regulations (e-CFR), 2026. Title 30, Part 56, Subpart H; eCFR Version Up to Date as of April 23, 2026. Available online: https://www.ecfr.gov/current/title-30/chapter-I/subchapter-K/part-56/subpart-H/section-56.9300 (accessed on 10 May 2026).
84. Han, L.; Liu, P. Design of Unmanned Road Widths in Open-Pit Mines Based on Offset Reaction Times. *Appl. Sci.* **2024**, *14*, 2995. [CrossRef]
85. Zhao, Z.; Bi, L. A New Challenge: Path Planning for Autonomous Truck of Open-Pit Mines in The Last Transport Section. *Appl. Sci.* **2020**, *10*, 6622. [CrossRef]
86. NIOSH. Preventing Dump Truck-related Injuries and Deaths During Construction—Guidance for Employers. In *Technical Report DHHS (NIOSH) Publication No. 2023-137, U.S. Department of Health and Human Services, Centers for Disease Control and Prevention*, National Institute for Occupational Safety and Health: Cincinnati, OH, USA, 2023. [CrossRef]
87. Koerner, R.M. *Designing with Geosynthetics*, 6th ed.; Xlibris: Bloomington, IN, USA, 2012.
88. Gouda, J.; Rami Reddy, D.S.; Srinivasan, V.; Butle, V. Comprehensive Review of Haul Road Design Methods: A Comparative Approach. *Arch. Min. Sci.* **2024**, *69*, 529–554. [CrossRef]
89. Lu, X.; Tu, L.; Tian, Y.; Zhou, W.; Zhao, X.; Yang, Y. Experimental Study of the Freeze–Thaw Damage of Alpine Surface Coal Mine Roads Based on Geopolymer Materials. *Water* **2023**, *15*, 3903. [CrossRef]
90. Ghimire, U.; Bheemasetti, T.V.; Kim, H.J. Performance of stabilized copper mine tailings with freeze-thaw and wet-dry seasonal cycles. *J. Rock. Mech. Geotech. Eng.* **2025**, *17*, 1418–1428.

91. Ruan, S.; Li, S.; Lu, C.; Gu, Q. A Real-Time Negative Obstacle Detection Method for Autonomous Trucks in Open-Pit Mines. *Sustainability* **2023**, *15*, 120. [CrossRef]
92. *ISO 3450:2011*; Earth-Moving Machinery—Wheeled or High-Speed Rubber-Tracked Machines—Performance Requirements and Test Procedures for Brake Systems. International Organization for Standardization: Geneva, Switzerland, 2011.
93. Westerhof, B.; Kalakos, D. Heavy Vehicle Braking Using Friction Estimation for Controller Optimization. Master's Thesis, Chalmers University of Technology, Gothenburg, Sweden, 2017.
94. Luo, Y. *Time Constraints and Fault Tolerance in Autonomous Driving Systems*; Technical Report UCB/EECS-2019-39; University of California: Berkeley, CA, USA, 2019.
95. Visser, A.T. Haul Roads Can Make Money! *J. S. Afr. Inst. Min. Metall.* **2015**, *115*, 993–999. [CrossRef]
96. Lerchs, H.; Grossmann, I.F. Optimum Design of Open-Pit Mines. *CIM Bull.* **1965**, *58*, 47–54.
97. Rivera Letelier, O.; Espinoza, D.; Goycoolea, M.; Moreno, E.; Muñoz, G. Production Scheduling for Strategic Open Pit Mine Planning: A Mixed-Integer Programming Approach. *Oper. Res.* **2020**, *68*, 1425–1444. [CrossRef]
98. Meech, J.; Parreira, J. An Interactive Simulation Model of Human Drivers to Study Autonomous Haulage Trucks. *Procedia Comput. Sci.* **2011**, *6*, 118–123. [CrossRef]

Disclaimer/Publisher's Note: The statements, opinions and data contained in all publications are solely those of the individual author(s) and contributor(s) and not of MDPI and/or the editor(s). MDPI and/or the editor(s) disclaim responsibility for any injury to people or property resulting from any ideas, methods, instructions or products referred to in the content.