engineering proceedings

MDPI

Proceeding Paper

Analyzing the Possibilities of Increasing the Efficiency of Actuators in Pneumatic Systems †

Jaroslaw Markowski [1,*], Damian Frackowiak [1,*], Pawel Imilkowski [1], Grzegorz Wieczorkiewicz [2], Krzysztof Jesionek [3], Iliya Iliev [4] and Piotr Dlugiewicz [5]

[1] Faculty of Mechanical Engineering, Poznan University of Technology, 61-138 Poznan, Poland; pawel.imilkowski@doctorate.put.poznan.pl
[2] Lower Silesian Center for New Technologies, 52-314 Wroclaw, Poland; dcnt.pl@protonmail.com
[3] Faculty of Technical and Economic Sciences, Witelon Collegium State University, 59-220 Legnica, Poland; krzysztof.jesionek@pwr.edu.pl
[4] Department of Heat, Hydraulics and Environmental Engineering, University of Ruse, 7004 Ruse, Bulgaria; iiliev@enconservices.com
[5] Imagine Flying LLC, Jacksonville, FL 32225, USA; pd@imagineflying.com
* Correspondence: jaroslaw.markowski@put.poznan.pl (J.M.); damian.frackowiak@put.poznan.pl (D.F.)
† Presented at the International Conference on Electronics, Engineering Physics and Earth Science (EEPES2026), Bandirma, Turkey, 24–27 June 2026.

Abstract

Pneumatic systems are widely used in production machine centers and in the actuator systems of machines and devices in many engineering applications. This widespread use of pneumatic systems stems from advantages such as the availability of the working medium and the ability to convert energy into the medium by increasing its thermodynamic parameters, such as pressure, temperature, and mass flow. Energy conversion is typically performed from electricity using compression machines. Powering compressors with electricity represents a significant financial cost, impacting the profitability of a company's operations. The compression process generates a large amount of heat, which is a loss. In large production plants, heat recovery is used in compressor rooms for the company's operational needs, reducing these losses. Furthermore, air as a working medium must be purified of excess water (moisture) and oil, which generates additional energy costs in the process of preparing the air for use in pneumatic systems. All of this makes air as a working medium for pneumatic systems expensive. Additional company costs, such as materials and raw materials for production, labor costs, and tax costs, force companies to seek ways to reduce them in order to increase the competitiveness of their operations. One approach is to improve the functioning of the production process infrastructure. For this purpose, an assessment was conducted to increase the efficiency of actuators in the pneumatic systems used in production machines. The authors present the results of this analysis in this article.

Keywords: energy performance; pneumatic system; process support; negative pressure

Check for updates

Academic Editors: Teodor Iliev, Ivaylo Stoyanov, Grigor Mihaylov and Selahattin Kosunalp

Published: 21 September 2026

Copyright: © 2026 by the authors. Licensee MDPI, Basel, Switzerland. This article is an open access article distributed under the terms and conditions of the Creative Commons Attribution (CC BY) license.

1. Introduction

Pneumatic systems, due to their operational characteristics, have become widely adopted across the broadly understood industry. From small enterprises to large manufacturing plants, the use of pneumatic systems is ubiquitous. They represent a method of energy conversion—from various primary energy forms to mechanical energy to potential energy stored in the working medium, which is compressed air. Air is a suitable working medium due to its availability and the cleanliness of pneumatic systems. In the

event of system leakage, no environmental contamination occurs; however, this also makes leak detection more difficult. Any loss of tightness in the system results in energy losses which, due to the difficulty of leak identification, lead to increased energy consumption and consequently economic losses for the enterprise.

Contemporary pneumatic installations constitute a crucial component of production systems; however, their development is primarily driven by the need to reduce energy consumption and improve operational efficiency. This is due to the fact that compressed air systems belong to the most energy-intensive auxiliary utilities in industry, and their overall efficiency often does not exceed 30%, making them an area with significant optimization potential [1]. Additionally, compressed air accounts for approximately 10% of industrial electricity consumption, which directly impacts both operating costs and the environmental footprint [2].

The primary direction of development is a system-level approach to energy efficiency. This approach involves shifting from the optimization of individual components to the analysis of the entire energy chain—from compressed air generation to its distribution to its utilization at end actuators. In practice, this process begins with a detailed energy audit, including measurements of flow rate, pressure, and electrical energy consumption. Subsequently, the main sources of energy losses are identified, such as pressure fluctuations and system leakages, which may constitute a substantial portion of total energy losses [3].

The next step involves improving operating parameters, particularly through tailoring them to process demand. A reduction in operating pressure by 1 bar may result in approximately 10% energy savings [4]. This is followed by the implementation of loss reduction measures, such as sealing leak points, minimizing idle operation, and optimizing the distribution network geometry. Such an approach allows for an energy consumption reduction in the range of 20–50%, depending on the system characteristics [5].

Another important development trend is the minimization of compressed air consumption by end-use devices, particularly pneumatic actuators. Studies indicate that conventional control methods lead to significant inefficiencies due to excessive air supply. Therefore, current developments focus on the precise control of the air volume delivered to working chambers. The process begins with an analysis of the actuator duty cycle, including force, velocity, and timing requirements. Subsequently, volumetric control methods are applied along with the optimization of filling and exhaust times. Motion phases are further adapted by utilizing system inertia and reducing air supply duration. Additionally, energy-efficient valves are implemented, and components are properly sized to avoid oversizing. These measures can reduce air consumption by several tens of percent and in some cases up to 70% [6].

A significant trend is also the development of intelligent control systems. In this approach, pneumatic installations are equipped with advanced measurement systems, including sensors for flow rate, pressure, and temperature, enabling real-time monitoring. The collected data are then analyzed using artificial intelligence algorithms or expert systems. Based on this analysis, adaptive control strategies are implemented to adjust system parameters to current demand. Another step involves predictive maintenance, enabling the early detection of leaks and forecasting of failures. Such solutions lead to substantial reductions in energy losses and improvements in system reliability [7].

In parallel, methods for optimizing compressor operation are being developed, as compressors represent the main source of energy consumption in pneumatic systems. An analysis of their operating characteristics shows that part-load operation is particularly inefficient, with efficiency dropping significantly below nominal values [8]. To address this issue, variable speed drives (VSDs), the optimization of the number of operating compressors, and improvement in power supply quality (e.g., reactive power compensation) are

applied. An important step is also reducing idle operation, which generates significant energy losses without performing useful work.

One of the key development directions is the integration of pneumatic installations with the concept of sustainable development. This includes both energy consumption reduction and the limitation of CO_2 emissions. In practice, this process begins with the assessment of the installation's energy footprint, followed by the implementation of energy-efficient components and energy management systems. System modernization, including the optimization of operating parameters and elimination of losses, may lead to significant emission reductions, reaching even several dozen tons of CO_2 per year [9].

Another important direction is the development of energy recovery technologies, particularly through the utilization of exhaust air. In conventional systems, the energy contained in this air is completely dissipated, significantly reducing overall efficiency. Modern solutions involve identifying waste energy streams and storing them in intermediate tanks or buffer systems. In the next step, this energy is reused, for example, to support the operation of other actuators or to supply fewer demanding circuits. The integration of this process with the control system allows for synchronization with the operating cycle of the installation. Studies indicate that such solutions can result in energy savings of approximately 37–39% [10].

The development of modern pneumatic installations is therefore focused on maximizing energy efficiency and integration with advanced control systems. Key actions include system-wide optimization, a reduction in air consumption by end users, energy recovery, the implementation of intelligent control systems, and the optimization of compressor operation. The implementation of these measures not only significantly reduces operating costs but also improves the competitiveness of pneumatic technologies in modern industry. The authors' research interests are aligned with the issue of the reuse of the working medium. The air introduced into a pneumatic system undergoes both energy-intensive and conditioning processes, such as drying and oil removal, which themselves contribute to energy consumption due to pressure losses across dryers and filters. Therefore, it appears desirable to capture the air after the working process and reuse it in subsequent processes after recompression. To this end, the application of an additional recovery installation is proposed, in which negative pressure conditions are created. Furthermore, it is proposed to utilize such a vacuum installation to support actuator processes. Within this scope, experimental investigations were conducted on a double-acting pneumatic cylinder system, and the results of these experiments are presented in this paper.

2. Methodology

In connection with adopting the concept of recovering used air, the possibility of applying a vacuum system was considered. Besides capturing post-process air, this system may also affect the course of the operating processes of individual working elements of the pneumatic installation. Taking this into account, verification tests were carried out to assess changes in operating times and in the velocity of the piston extension process. These tests were conducted on a laboratory test stand—Figure 1.

Its main actuating element is a Festo pneumatic cylinder (1) (Festo, Esslingen am Neckar, Germany), double-acting with a single-sided piston rod, without cushioning, with a piston diameter D = 20 mm, rod diameter d = 8 mm, and a stroke length l = 100 mm.

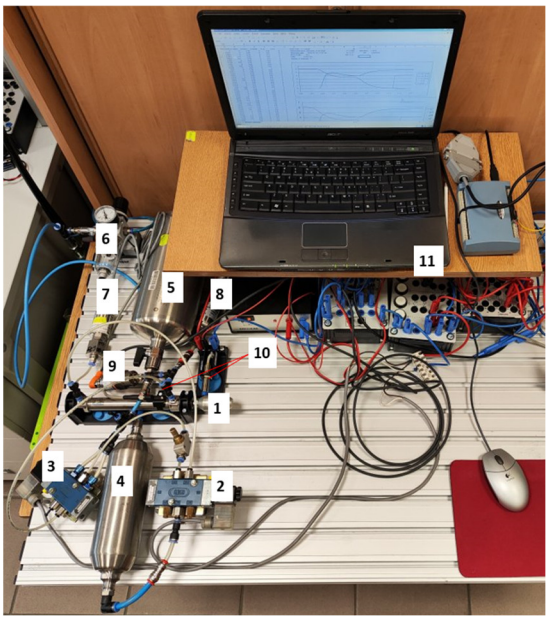

Figure 1. Test stand for vacuum-assisted cylinder system: 1—cylinder; 2—directional control valve R1; 3—directional control valve R2; 4—tank Z1; 5—tank Z2; 6—compressed air preparation unit; 7 and 8—pressure transducers; 9—vacuum transducer; 10—cylinder piston position sensors; 11—measurement and control instrumentation.

The system uses two 5/2 directional control valves (2, 3) with monostable electric control (RexrothPneumatik, Lohr am Main, Germany). Note: This valve is part of a legacy Rexroth pneumatic product range and has been discontinued from current production and sales. Two steel tanks were also used: (4) CRVZS-0.75 (Festo, Esslingen am Neckar, Germany) and (5) CRVZS-2 (Festo, Esslingen am Neckar, Germany). The system also includes a filter regulator unit (6), Prema, model 50.0201.1410.10 (PREMA S.A., Warsaw, Poland). Two CL 1L pressure transducers by ZEPWN (7, 8) were installed (ZEPWN, Marki, Poland). These are strain gauge transducers with a built-in amplifier. A PA9029 pressure transducer by IFM (9) was also used (IMF electronic, Katowice, Poland). The measurement of cylinder extension is carried out at the limit positions at the beginning of motion and at its end, at the full extension of the piston rod, using two inductive reed position sensors (10) (IMF electronic, Katowice, Poland): position 1—rod retracted; position 2—rod extended. Measurement signals were recorded using a computer and DASYLab 12 light measurement software via an MC–USB 1208HS-2AO Measurement Computing data acquisition card (11) (Measurement Computing, Chesterland, OH, USA). The entire system was supplied from a compressed air installation with an air pressure of 6 bar, and the post-process air extraction system was equipped with a vacuum pump generating a negative pressure in the system of −1 bar.

The measurements of individual parameters in various system configurations—Figure 2—were carried out as a function of time. The reference configuration was assumed to be a pneumatic system supplied with air at a pressure of 6 bar, without a post-process air recovery system (a). The modified system (b) involved the introduction, into the reference pneumatic system, of a configuration incorporating a post-process air recovery system with air lines of ϕ6 diameter and a vacuum accumulator in the form of a tank Z2 with a volume of 2 dm^3.

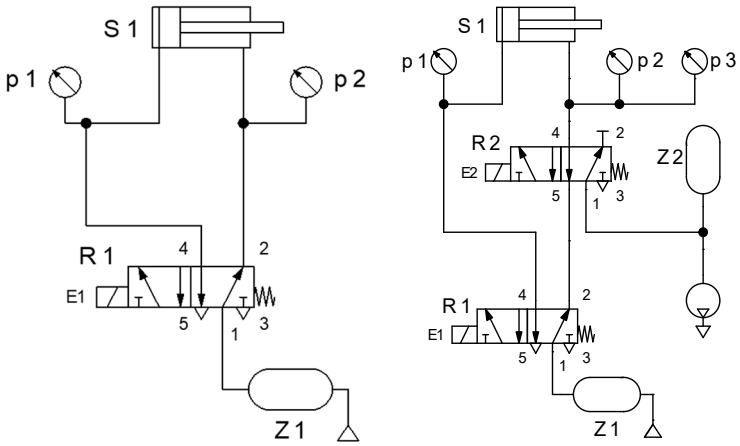

(**a**) (**b**)

Figure 2. Configurations of pneumatic test systems: (**a**) reference configuration; (**b**) configuration with post-process air recovery. Z1–air tank 1, Z2–air tank 2, R1 and R2–flow regulator, S1–cylinder, E1 and E2–connection for the control electric impulse.

During the conducted measurements, selected parameters were recorded as a function of time. The changes occurring in their profiles were subsequently analyzed.

3. Results and Discussion

This study was conducted in accordance with the methodology adopted and presented in Section 2. In the first stage, the reference system was examined. The system was supplied with compressed air at a pressure of 6 bar. During the switching of the cylinder, the air from its post-process chamber was released into the surroundings.

The measurements of parameters were carried out at the locations in the system indicated in the diagram in Figure 2a. The changes in pressure values as a function of time are shown in the graph in Figure 3. In this figure, vertical lines indicate the time corresponding to the beginning of the piston movement t_{x1} = 3.611 s and the end of its motion t_{x2} = 3.718 s. Based on this, it can be determined that the time required for the piston to travel the distance l = 100 mm was t = 0.107 s. On this basis, the average piston velocity can be calculated as v_I = 0.934 m/s.

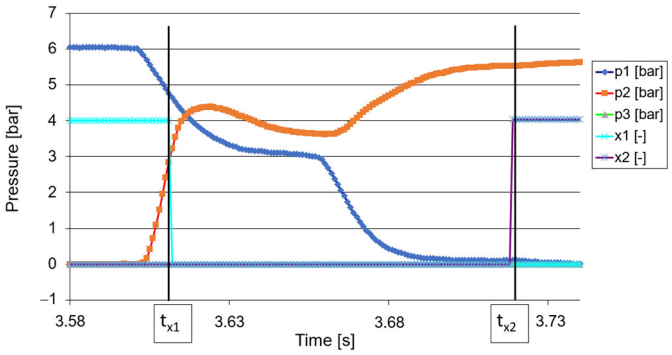

Figure 3. Changes in pressure values at the measurement points of the reference pneumatic system.

To analyze the effect of the post-process air extraction system on the operation of the cylinder, an analysis of measurements from the modified system was performed in accordance with the system diagram in Figure 2b. The changes in pressure values as a function of time are shown in the graph in Figure 4. In this figure, vertical lines indicate the time corresponding to the beginning of the piston movement t_{x1} = 2.383 s and the end of its motion t_{x2} = 2.465 s. Thus, it can be determined that the time required for the cylinder

piston to travel the distance l = 100 mm was t = 0.082 s. On this basis, the average piston velocity can be calculated as v_{II} = 1.219 m/s.

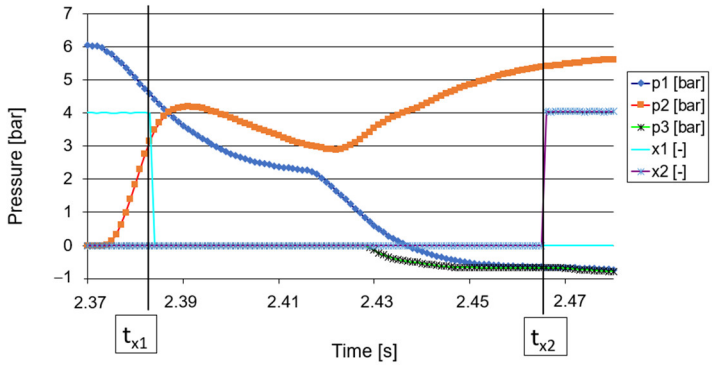

Figure 4. Changes in pressure values at the measurement points of the pneumatic system with a post-process air extraction system.

By comparing the values of the average piston velocity obtained from the analysis for the reference system v_I = 0.934 m/s and for the system modified with the post-process air extraction system v_{II} = 1.219 m/s, it can be concluded that the average piston velocity in the system with post-process air extraction increased by 0.285 m/s. This represents an increase of approximately 30% relative to the piston velocity in the reference system v_I.

4. Conclusions

This paper presents an evaluation of the impact of implementing a post-process air recovery system from the actuating elements of a pneumatic system. The measurements carried out in comparative studies and the analysis of the results in terms of changes in the average piston velocity indicate an increase in the cylinder piston speed by approximately 30%.

The obtained increase in the average velocity of the actuating elements used in pneumatic systems on production lines may contribute to improving their efficiency. An increase in production line efficiency translates into a greater number of products manufactured in the same time, using the same human resources. In this way, this may lead to a reduction in the unit cost of the product and an increase in the profitability of the enterprise.

The introduction of an extension of the pneumatic system with a post-process air recovery system generates costs related to the modification of production lines equipped with pneumatic systems; therefore, it is necessary to carry out detailed technical and cost analyses in the context of potential future benefits for the enterprise.

Author Contributions: Research concept, J.M., D.F. and G.W.; methodology, P.I., D.F. and P.D.; software, K.J. and I.I.; validation, J.M. and D.F.; formal analysis, G.W. and P.I.; investigation, P.D. and D.F.; resources, J.M.; data curation, J.M. and D.F.; writing—original draft preparation, K.J., I.I. and P.I.; writing—review and editing, G.W. and D.F.; visualization, K.J.; supervision, P.D.; project administration, J.M. All authors have read and agreed to the published version of the manuscript.

Funding: This study is financed by the Scientific and statutory activities of the Institute of Machine Design, Poznań University of Technology, Poland, no. 5300101/0611/0010/ND.

Institutional Review Board Statement: Not applicable.

Informed Consent Statement: Not applicable.

Data Availability Statement: Data are contained within this article.

Conflicts of Interest: Piotr Dlugiewicz was employed by the company Imagine Flying LLC. The remaining authors declare that the research was conducted in the absence of any commercial or financial relationships that could be construed as a potential conflict of interest.

References

1. Love, L.J.; Lanke, E.; Alles, P. Estimating the Impact (Energy, Emissions and Economics) of the U.S. Fluid Power Industry, Oak Ridge National Laboratory, ORNL/TM-2011/14, December 2012. Available online: https://teams.public.onecdn.static.microsoft/evergreen-assets/safelinks/2/atp-safelinks.html (accessed on 1 September 2016).
2. Abela, R.; Refalo, P.; Borg, M.; Francalanza, E. Pneumatic Control for Sustainable Compressed Air Systems: Multi-criteria Optimisation for Energy Efficient Production. *Procedia CIRP* **2024**, *122*, 247–252. [CrossRef]
3. Botts, A.; Marshall, L.; Moskowitz, F.; Nimbalkar, S.; Wenning, T. Identifying Energy Inefficiencies in Compressed Air Systems: A Systematic Approach with the Compressed Air Scoping Tool. *Int. J. Energy Manag.* **2024**, *6*, 20–50.
4. Zaim, A. Industrial Compressed Air System Optimization: Experimental Evaluation of Energy Efficiency and Sustainability Gains. *Processes* **2025**, *13*, 3590. [CrossRef]
5. Abela, K.; Francalanza, E.; Refalo, P. Utilisation of a compressed air test bed to assess the effects of pneumatic parameters on energy consumption. *Procedia CIRP* **2020**, *90*, 498–503. [CrossRef]
6. Jiang, Z.; Xiong, W.; Du, H.; Wang, Z.; Wang, L. Energy-saving methods in pneumatic actuator stroke using compressed air. *J. Eng.* **2021**, *2021*, 241–251. [CrossRef]
7. Thabet, M.; Sanders, D.; Haddad, M.; Bausch, N.; Tewkesbury, G.; Becarra, V.; Barker, T.; Piner, J. Management of Compressed Air to Reduce Energy Consumption Using Intelligent Systems. In *Intelligent Systems and Applications. IntelliSys, Advances in Intelligent Systems and Computing*; Arai, K., Kapoor, S., Bhatia, R., Eds.; Springer: Cham, Switzerland, 2020; Volume 1252. [CrossRef]
8. García, G.J.B.; Yanes, J.P.M.; Carrera, L.A.I.; Constantino-Robles, C.D.; Santiago, B.J.; Ramírez, J.M.O.; Abreo, O.R.; Rodríguez-Reséndiz, J. Energy Optimization of Compressed Air Systems with Screw Compressors Under Variable Load Conditions. *Math. Comput. Appl.* **2025**, *30*, 107. [CrossRef]
9. Herrera, H.H.; Villalba, D.P.; Angarita, E.N.; Ortega, J.I.S.; Echavarría, C.A.C. Energy savings in compressed air systems a case of study. *IOP Conf. Ser. Mater. Sci. Eng.* **2021**, *1154*, 012009. [CrossRef]
10. Ceppari, L. Pneumatic Energy Saving Unit in Pneumatic Systems—Effect of a Pneumatic air Recirculating Unit on Energy Con-sumption and on Actuator's Velocity in a Pneumatic System. Master's Thesis, Aalto University, Espoo, Finland, 2022.

Disclaimer/Publisher's Note: The statements, opinions and data contained in all publications are solely those of the individual author(s) and contributor(s) and not of MDPI and/or the editor(s). MDPI and/or the editor(s) disclaim responsibility for any injury to people or property resulting from any ideas, methods, instructions or products referred to in the content.