engineering proceedings

MDPI

Proceeding Paper

Integrated Linear Transformer-Based Diode Bridge Rectifier for Improved Power Quality in Electric Vehicle Charging Stations †

Sugunakar Mamidala and Yellapragada Venkata Pavan Kumar *

School of Electronics Engineering, VIT-AP University, Amaravati 522241, Andhra Pradesh, India; sugunakarmamidala.20phd7113@vitap.ac.in

* Correspondence: pavankumar.yv@vitap.ac.in; Tel.: +91-863-2370364

† Presented at the 6th International Electronic Conference on Applied Sciences, 9–11 December 2025; Available online: https://sciforum.net/event/ASEC2025.

Abstract

As electric vehicle (EV) charging stations are increasingly common, the front-end rectifier stage of the charging infrastructure tends to degrade grid power quality by introducing high input current harmonics, poor power factor, and voltage distortion. Despite their simplicity and low cost, the conventional diode bridge rectifiers (DBR) usually have a total harmonic distortion (THD) of over 25% and have power factors of below 0.80. These issues have been handled with the active power factor correction (PFC) techniques, which increase system complexity, the cost of the system, and the increased sophistication of the control algorithm. This article proposes an integrated linear transformer (LT) based diode-bridge rectifier (DBR) that is intended to enhance the quality of power of the EV charging stations without invoking active control mechanisms. The suggested arrangement combines a linear transformer, a passive filter network, and a diode bridge to obtain multipurpose voltage step-down (galvanic isolation) and harmonic mitigation in a single structure. The system provides improved voltage regulation, flux balancing, and filter resonance, and reduced current distortion. The proposed system is validated with MATLAB/Simulink R2021a, and the results show that the proposed system has a THD of 4.32% that complies with the IEEE 519 harmonic standards, and also the input power factor is increased to 0.98. It also decreases DC output voltage ripple by 4.8% to 0.7% and improves its voltage regulation by 9.1%, as well as increases its system efficiency to 96.3%. The findings make integrated LT + DBR an affordable, robust, and less massive implementation of the next-generation EV charging infrastructure, specially designed to meet the needs of smart grid deployment and integration in Tier-2 and Tier-3 cities, where simplicity and power quality compliance remain a priority.

Keywords: electric vehicle charging; diode bridge rectifier; linear transformer; power quality; total harmonic distortion; power factor; efficiency

Check for updates

Academic Editors: Nunzio Cennamo and Alessandro Lo Schiavo

Published: 20 May 2026

Copyright: © 2026 by the authors. Licensee MDPI, Basel, Switzerland. This article is an open access article distributed under the terms and conditions of the Creative Commons Attribution (CC BY) license.

1. Introduction

The number of electric vehicle (EV) charging stations has grown exponentially in the current distribution networks, and the effects of nonlinear AC–DC conversion interfaces have increased, which negatively affects the quality of power in the grid [1]. These unwanted effects of power quality, such as accelerated reactive power circulation, transformer heating losses, and voltage distortion, have been regularly experienced within EV charging clusters when connected to the grid [2,3]. The active PFC topologies and

multi-stage DC–DC chargers have been suggested to enhance harmonic performance and power factor, yet the methods introduce more losses, EMI, complexity, and cost, and are not suitable to be used in large-scale EV charging infrastructure [4–7]. To eliminate the disadvantages of active converters, passive and hybrid harmonic-reduction approaches have been actively investigated, with LC filters and transformer leakage inductance being useful in low-order harmonic-reduction [8,9]. Further investigators identified passive approaches as cheap and strong but much less dynamic, adopting and maybe large in physical dimensions. The power converter technologies and power factor correction (PFC) methods in EV charging systems are examined. The analysis of the different converter architectures used in EV fast-charging facilities and their performance with respect to efficiency, harmonic distortion, and grid compatibility. Similarly, various types of PFC in EV chargers are used to enhance the quality of input current and power factor. The main advantages of these topologies are that they offer a high-power factor and lower harmonic distortion, and an appropriate EV-charged infrastructure with better grid compatibility. The disadvantages include high switching frequency requirements and control algorithms, and enhanced system complexity and implementation cost. Various AC–DC converters are used to improve the quality of power of EV charging systems [10,11]. More recently, transformer-based AC–DC rectification has been considered as one of the ways of incorporating galvanic isolation and harmonic reduction in a natural form into the magnetic structure. The linear transformers of appropriate leakage reactance can be highly beneficial in harmonic injection, as well as stabilizing diode conduction intervals, and that DC voltage regulation, reduction in ripple, and overall converter reliability are improved by such leakage reactance [12,13]. To illustrate this, [14] discussed an improved power electronic converter to minimize harmonic distortion in EV chargers. Likewise, [15] describes the high-efficiency AC to DC converter to be used in charging EVs. In addition, [16] developed an AC–DC converter front-end with a high-power factor to enhance the quality of input current waveforms and minimize THD. These methods mainly focused on the conversion efficiency and input quality, lower harmonic distortion, and better power factor. These topologies face some difficulties in demanding complicated control algorithms, switching losses, and the complexity of hardware.

The [17] offered an adapted bridgeless Landsman converter to EV battery chargers to have better harmonic performance. The main advantages are less conduction losses than the traditional diode bridge rectifiers, better efficiency, and power factor. Although these converters have some constraints, they demand complicated switching management, a more complicated design, and controller demands. The other research papers have focused on grid interaction and harmonic mitigation methods of EV charging infrastructure. The [18] discussed an EV charging system which incorporates renewable energy sources so as to promote the system reliability and efficiency, and [19] examined the methods of harmful mitigation of a grid-friendly EV charging system. In a similar way, [20,21] analyzed the comparative study across various power-quality improvement techniques in EV charging stations. These topologies have the benefits of enhanced grid stability and less harmonic distortion of EV charging loads. Even though these systems required some additional filtering circuits and an energy management strategy, recent research highlights that the EV chargers of the next generation should not be too large, too efficient, too economical, and grid-compliant without using sophisticated active controls, which further increases the need to have future architectures that can provide better power factor and consistent voltage operation [22,23].

Recent studies have explored sophisticated passive harmonic mitigation strategies to enhance power quality in nonlinear power systems. [24] designed a triple-tuned passive filter that effectively eliminates major low-frequency harmonics, ensuring system stability

and acceptable power factor. Likewise, [25] explored the optimal size of passive filters in low-voltage networks with renewable energy integration, stressing the need for proper parameter selection to effectively reduce harmonics while having a low impact on reactive power. These works verify that tuned passive filters can effectively decrease the THD; however, they also indicate that the filter performance is sensitive to tuning and may not be robust to system and component variations. The transformer-assisted rectifier configurations have also been extensively investigated for use in suppressing harmonics in power electronic systems. [26] showed that multipulse rectifier configurations employing phase-shifting transformers can significantly mitigate input current harmonics in EV charging by canceling targeted harmonics. Similarly, [27] demonstrated that transformer-based multipulse rectifiers enhance current waveform quality and lower THD. While effective, these solutions add complexity, cost, and size, which may not be ideal for smaller, lower-cost EV charging systems.

To enhance the quality of input current and power factor, the current EV charging systems tend to use active power factor correction (PFC) converters and hybrid harmonic mitigation methods. The performance of a conventional diode bridge rectifier (DBR) and DBR in combination with a DC–DC converter was purposefully compared in this research because these two topologies remain popular in low-cost and low-power EV charging systems, as they are simple, robust, and less challenging to control. The main focus of the proposed system is to enhance the harmonic work of the traditional DBR-based charging topology with passive and structural solutions, with the help of which one does not need to add new active switching elements and control mechanisms. The analysis highlights that electricity markets exist under dynamic supply-demand, regulatory, and pricing policies. Based on the literature studied, most designs of the EV charger employ active converters, PFC circuits, and sophisticated control methods to improve the power factor and lessen harmonic distortion. Despite these methods having the capability of good power quality and high efficiency, they tend to need a complex control system, high switching frequency devices, and other power electronics. This is increasing the complexity of the system, switching losses, and implementation cost. Thus, a simple and sensible charger front-end structure remains necessary to enhance the quality of power without complex control and extra converter steps. In this respect, this paper proposed an integrated linear transformer-based diode bridge rectifier (LT + DBR), aimed to improve the quality of power, with a simple passive configuration that is appropriate to use in EV charging station applications. Thus, to address the above-mentioned issues, this paper proposes an integrated linear LT + DBR topology. The proposed structure lowered the THD, improved the power factor, enhanced the DC voltage regulation, reduced the output ripple without using any active switches or active control mechanisms, and improved the overall efficiency and performance.

The scalability of the design of the proposed LT + DBR-based EV charging system guarantees its application to higher power levels. The converter capacities and filter characteristics can be scaled based on the system power and voltage level, and the approximate harmonic content, and the system can be adopted in medium- and high-power EV charging systems without changing the overall converter structure. Over the past few years, research on electric vehicle (EV) charging systems and power quality has pointed to the need for scalable converter topologies and harmonic mitigation techniques to cope with growing load [28,29]. Furthermore, the performance of the system under grid disturbances, including voltage variations, grid impedance changes, and non-linear loads, has been evaluated. These conditions can have major impacts on harmonic distortion and system stability at the point of common coupling (PCC) as observed in recent power quality research [30,31]. But the use of suitably tuned passive filtering and sufficient damping prevents resonance and

ensures effective harmonic filtering. While some frequency drift may occur under different grid scenarios, the THD and overall power quality are maintained within the acceptable range, ensuring the feasibility and practicality of the proposed system.

The paper has the following contributions:

- An integrated linear transformer-diode bridge rectifier (LT + DBR) topology is proposed to enhance the quality of the input power to the EV charging.
- The inherent input current shaping and partial harmonic mitigation of the proposed system is achieved using the leakage inductance properties of linear transformers with no active switching device and control mechanism.
- The parallel RC passive filter is applied across the DC-bus (between the rectifier output and EV voltage) to reduce DC-link ripple and stabilize the output voltage supplied to the EV battery.
- Simulation findings confirm that the proposed system brings lower THD, better power factor, and smoother DC output, which is a simple and cost-effective alternative to traditional and actively controlled charging topology.

The rest of the paper is structured as follows. The design and implementation of the proposed LT + DBR charging architecture are described in Section 2. Section 3 provides the findings of the MATLAB simulation and its comparative analysis of the findings. Lastly, Section 4 wraps up the paper with the conclusion on key findings.

2. Design and Implementation of an Integrated LT + DBR Charging Station

The proposed LT + DBR front-end architecture of EV charging stations, which is shown in Figure 1, connects the 220 V AC grid with a 220/48 V linear transformer that offers galvanic isolation, suppresses high-frequency disturbances, and shapes the input current to minimize low-order harmonics. A full-wave diode bridge is used to process the linear transformer secondary voltage, and a parallel RC network is used to convert the resultant pulsating DC into a regulated low-ripple 60 V DC loading, appropriate to charge a 60 V, 25 Ah Li-ion battery pack. The leakage inductance and magnetic properties of the linear transformer inherently reduce the THD and reactive power at the grid side, while the RC filter produces a smooth DC with reduced ripple, which reduces the stress on a battery and maximizes efficiency.

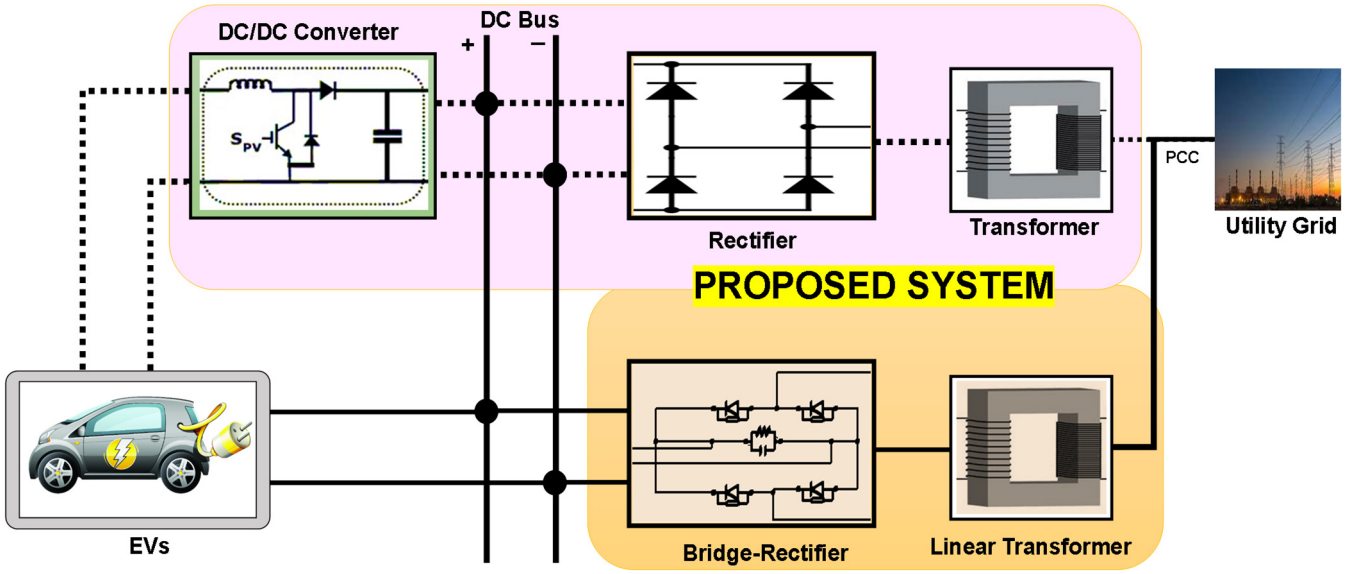

Figure 1. Block diagram representation of EV charging station with proposed LT + DBR.

The point of common coupling (PCC) is the connection between the linear transformer and the single-phase 220 V, 50 Hz utility grid. In view of the relatively low power rating of the charger (≈150 W) and the usual short-circuit current carrying of a low-voltage distribution system, the short-circuit ratio (SCR) at the PCC is supposed to be high enough, which is a realistic grid situation. The fast Fourier transform (FFT) analysis yields the THD of the grid voltage and current, and the fundamental component is 50 Hz and onward. The current THD obtained shows the harmonic performance at the PCC is acceptable, thus supporting the IEEE 519 compliance statement. In general, the suggested integrated LT + DBR design provides a power quality-compliant, isolated, and stable DC interface to current grid-connected EV charging systems.

To model the linear transformer in the proposed EV charging system under real-world operating conditions, the non-ideal equivalent circuit with parasitic impedances and loss components is used to model the linear transformer, as shown in Figure 2. The primary winding resistance (Rp), secondary winding resistance (Rs), leakage inductances are Llp and Lls, magnetizing inductance and core loss resistance are Lm and Rc. The proposed topology is scalable in nature and can be adjusted to alternative levels of voltage and power. The operating principle is the same as the converter control strategy, and the transformer turns ratio governs the voltage conversion, which can be formulated in Equation (1).

$$n = Np/Ns = Is/Ip = Vp/Vs \quad (1)$$

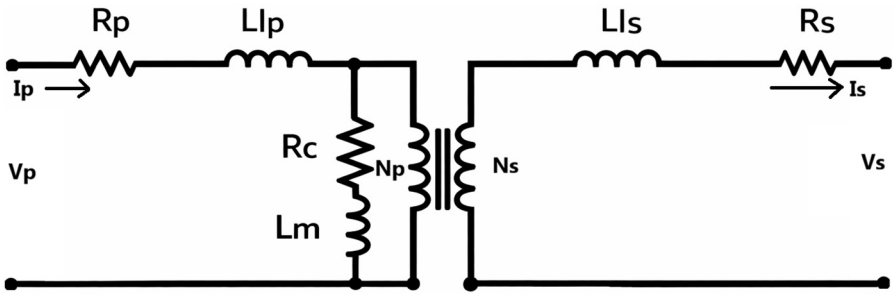

Figure 2. Linear transformer equivalent circuit with parasitic impedances.

The parasitic impedance of primary and secondary windings is calculated from Equation (2).

$$\left.\begin{array}{l} Zp = Rp + j\omega Llp \\ Zs = Rs + j\omega Lls \end{array}\right\} \quad (2)$$

The mechanism of harmonic mitigation is based on the leakage inductance and system impedance properties of transformers and affects the input current waveform based on the equivalent impedance referred to the primary side, which is calculated through Equation (3).

$$Zeq_p = Rp + j\omega Llp + \frac{Rs + j\omega Lls}{n^2} \quad (3)$$

The magnetizing impedance is calculated from Equation (4).

$$Zm = \left(\frac{1}{\left(1/Rc\right) + \left(1/j\omega Lm\right)} \right) \quad (4)$$

The overall equivalent impedance of the linear transformer is calculated from Equation (5).

$$Zeq = Rp + j\omega Llp + Zm + Rs + j\omega Lls \quad (5)$$

The winding copper losses are the key determinant of the thermal behavior of the transformer, which are calculated from Equation (6).

$$Pcu = I^2Rc \tag{6}$$

The winding resistance is temperature-dependent, and it is calculated from Equation (7).

$$R(T) = R_0[1 + \alpha(T - T_0)] \tag{7}$$

where R_0 is the resistance at temperature T_0, and α is the temperature coefficient of copper.

The parameters of the transformers in practical systems are different due to manufacturing tolerances. These variations are modeled using Equation (8).

$$\left.\begin{array}{l} Rp = Rp,nom(1 \pm \delta) \\ Lm = Lm,nom(1 \pm \delta) \end{array}\right\} \tag{8}$$

where δ is the tolerance of the component parameter, Rp,nom, and Lm,nom are the nominal primary resistance and nominal magnetizing inductance of the transformer core.

The parameters reflect the electrical and magnetic properties of the transformer that are applicable to harmonic propagation and harmonic mitigation of the system.

The linear transformer steps down the 220 V AC supply and galvanically isolates it, and the input harmonics are reduced, and better current shaping is achieved at the grid interface, as shown in Figure 3. The full-wave bridge rectifier (D1–D4) converts the secondary AC to regulated DC, in which alternate diode pairs are used to supply a half-cycle of charging current to the 60 V Li-ion battery. In the positive half-cycle of the transformer secondary voltage, diodes D1 and D3 are on, and D2 and D4 are off since current is permitted to run through the load in one direction. When in the negative half-cycle, diodes D2 and D4 are conducting, and diodes D1 and D3 are reverse-biased, there is no change in the polarity of the load. This alternating current provides complete-wave rectification and a sustained DC power supply to the EV battery. The parallel RC network removes the high-frequency ripple and stabilizes the DC link by eliminating transient peaks; therefore, delivering a smooth and battery-safe charging voltage.

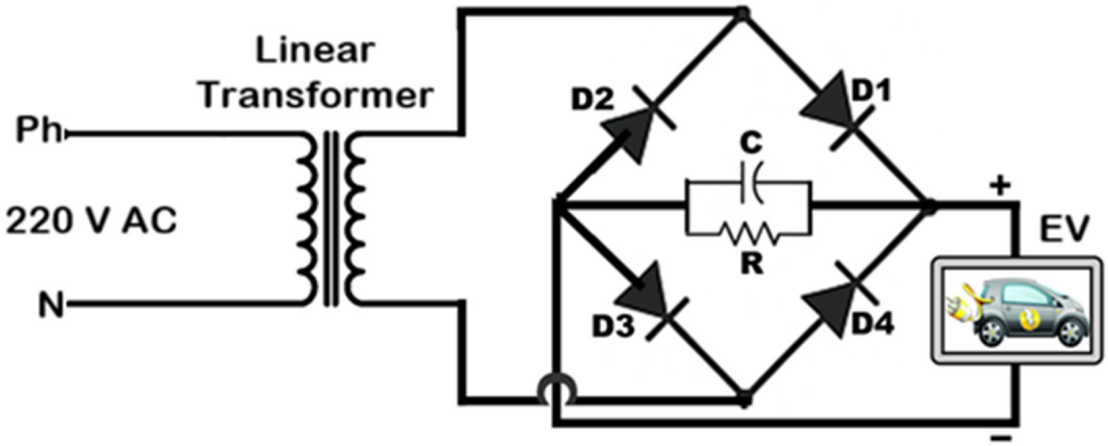

Figure 3. Operating principle of the proposed LT + DBR charging system.

To maintain the regulated DC output, the linear transformer's minimum secondary RMS voltage is calculated using Equation (9).

$$V_{s,rms,NL} = \frac{V_{DC,req} + 2V_D}{\sqrt{2}(1 - r)} \tag{9}$$

The effective charging voltage required for an EV battery is calculated from Equation (10).

$$V_{bat} = V_{s,pk} - 2V_D - \frac{\Delta V_{pp}}{2} \tag{10}$$

The ripple voltage is calculated using Equation (11).

$$\Delta V_{pp} = \frac{I_{ch}}{2 \times f \times C} \tag{11}$$

The filter capacitor (C) value is calculated from Equation (12) to limit the DC ripple.

$$C = \frac{I_{ch}}{2 \times f \times \Delta V_{pp}} \tag{12}$$

The damping resistor (R) is calculated from Equation (13), which is used to ensure that the ripple is suppressed and eliminates resonance between the transformer leakage inductance and the filter capacitor.

$$R = \frac{1}{2 \times \pi \times f \times C} \tag{13}$$

where $V_{DC,req}$ is the rectifier average DC output voltage, V_D is the diode rectifier forward voltage drop, r is the ripple-factor, V_{pp} is the DC output peak-peak ripple voltage, $V_{s,pk}$ is the peak value of transformer secondary voltage, f is the frequency, and I_{ch} is the battery charging current.

The systematic design process of the proposed charging system is shown in the flowchart in Figure 4. The approach is based on a linear power conversion path, starting with an input power source (220 V, 50 Hz). A linear transformer (LT) is used to obtain galvanic isolation and reduce secondary voltage. The diode bridge rectifier (DBR) is employed to rectify the AC voltage to a pulsating DC, which is then filtered by a parallel RC filter. This step is essential to limit the ripple and establish a DC-link. Finally, the converted energy is fed to the EV Load to charge the battery, with the nominal voltage and current profiles required to provide energy to the EV.

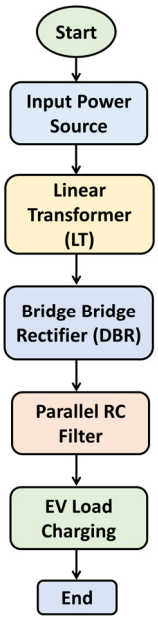

Figure 4. Flowchart for the proposed LT + DBR charging system.

3. Results and Discussion

The proposed system is validated only for a specific 220 V AC to 60 V DC, 25 Ah battery for modeling and simulation in this paper. The simulation parameters applied to test the proposed LT + DBR EV charging system are summarized in Table 1. The model incorporates grid impedance, transformer leakage inductances, filter components, EV battery properties, and solver setup in MATLAB/Simulink to ensure realism and repeatability.

Table 1. Simulation setup of the proposed LT + DBR EV charging system.

Category	Parameter	Value
Simulation Settings	Version Sampling time Simulation time Simulation solver type Configuration of PowerGUI	MATLAB/Simulink R2021a 5 µs 2 s ode3 (bogacki-shampine) Discrete mode
Grid Parameters	Voltage Frequency Source resistance Source inductance	220 V (RMS) 50 Hz 0.2 Ω 1 mH
Transformer Parameters	Voltage ratio	220:48 V
DBR Parameters	Diode forward voltage drops	0.7 V
Filter Parameters	Filter capacitor (C) Damping resistor (R)	6800 µF 47 Ω
EV Battery Parameters	Battery nominal voltage Battery capacity Charging current	60 V 25 Ah 2.5 A

The efficacy of the proposed integrated LT + DBR topology-based charging station is compared with traditional DBR and DBR + DC–DC converter-based charging stations across various power quality parameters, as discussed in the following sections.

3.1. Voltage Characteristics

Figure 5 indicates the input voltage and current waveforms of the grid side of a 220 V 50 Hz AC supply of the proposed LT + DBR EV charger.

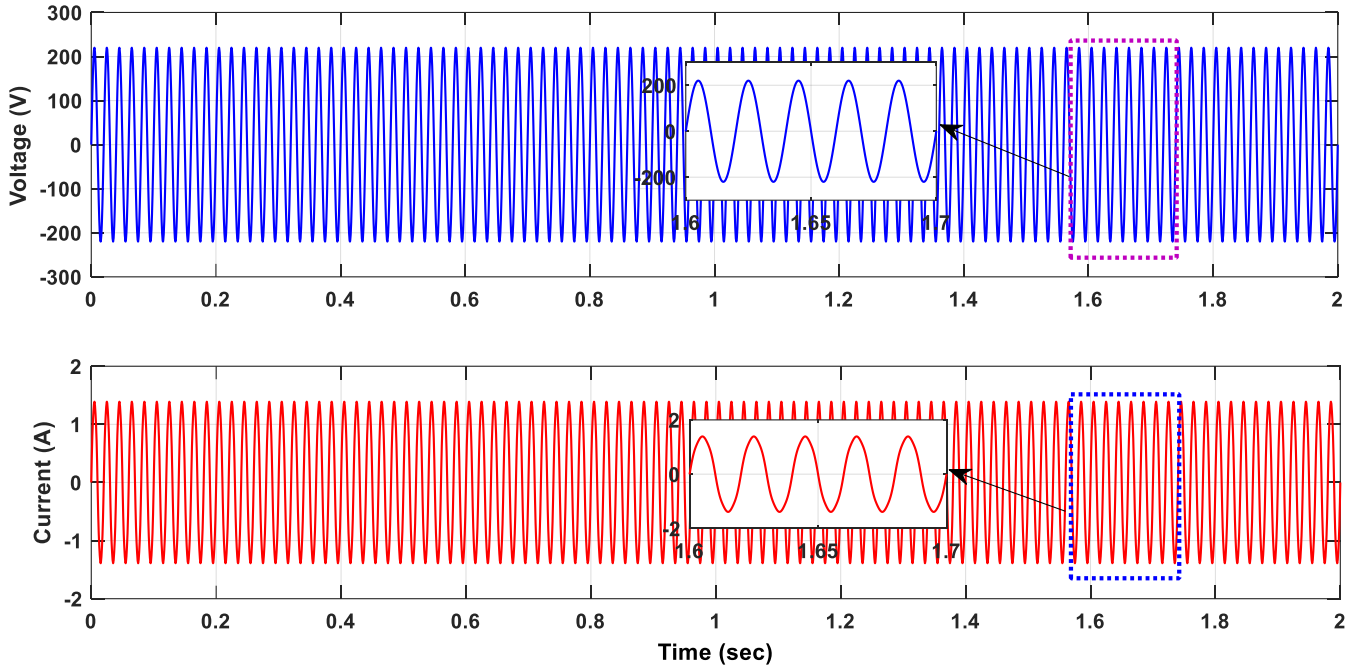

Figure 5. Grid input voltage and current waveforms.

The upper plot is the input grid voltage that is in a sinusoidal waveform with an amplitude of about ±220 V. The lower plot indicates the equivalent grid input current waveform, which varies between ±1.42 A. The input current is in phase with the supply voltage with a negligible shift. The zoomed area of the figure shows the phase alignment between the voltage and current waveforms, which means that the current is nearly in phase with the grid voltage. This indicates that the proposed LT + DBR topology draws a nearly sinusoidal current in the grid that is helpful to attain a high input power factor. These findings confirm the computation of the power factor and phase relationship between the voltage and current, which proves that the proposed charger can work with almost a unity power factor under steady-state operation.

The DC output characteristics of the traditional DBR, the DBR with a DC–DC converter, and the proposed integrated LT + DBR topology during the transient period (0–0.12 s) and steady state (0.12–2 s) are shown in Figure 6. The traditional DBR exhibits a large voltage ripple, which varies between 60 and 64.8 V (4.8%). The DBR + DC converter lowers the ripple to 60–63.4 V (3.4%), although harmonic effects are still present. The proposed LT + DBR configuration offers the best output stability, and it is limited to 60–60.7 V (0.7 ripple). The linear transformer has inherent filtering ability, which suppresses high-frequency distortion and enhances long-term voltage regulation. Therefore, the LT + DBR system is higher in performance in DC output and applicable in EV charging.

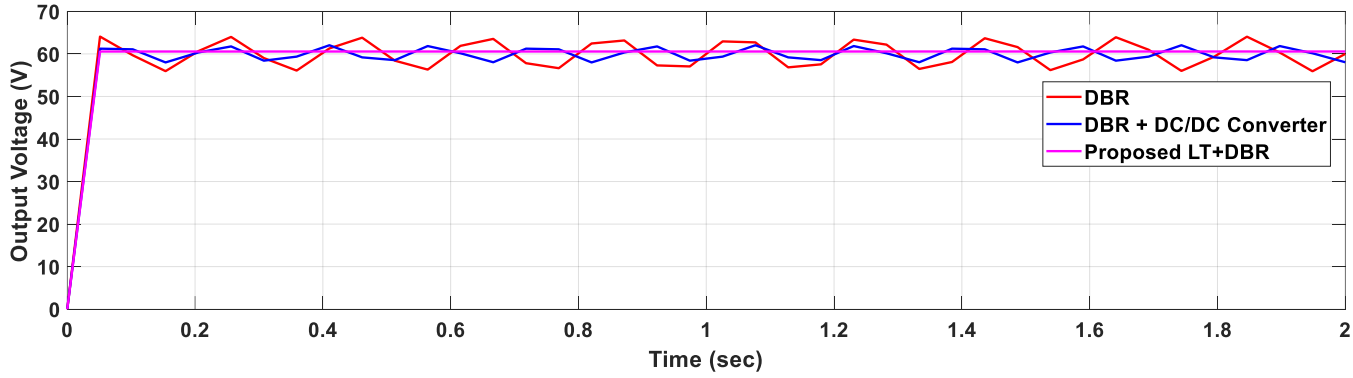

Figure 6. Output voltage comparison with the proposed LT + DBR.

3.2. EV Battery Characteristics

Figure 7 shows the dynamic characteristics of the EV battery, such as state of charge (SoC), terminal voltage, and charging current during the charging process. The SoC rises slowly to 20 percent to around 20.006 percent throughout the simulation period, which indicates a steady charging process. The battery voltage quickly increases and stabilizes at approximately 60 V at a settling time of about 0.02 s, which indicates good voltage regulation. The charging current is initially transient and establishes at a constant value of about −2.5 A in the course of 0.02 s, which proves that the charging continues in a steady state. These findings confirm that the proposed system is capable of providing regular DC output with lower ripple and charging performance that is dependable.

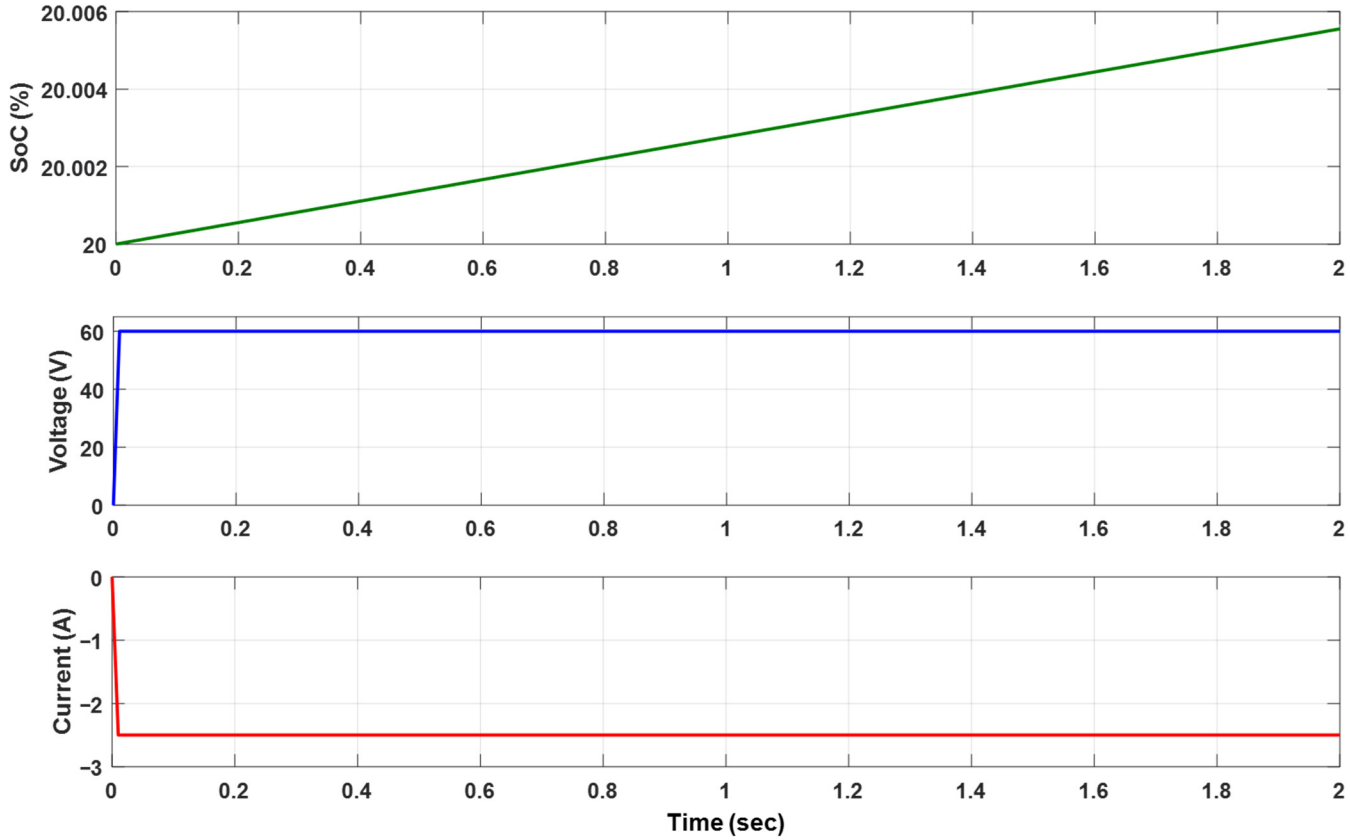

Figure 7. EV battery characteristics with the proposed LT + DBR.

The electric vehicle behavior within the proposed LT + DBR charging system is modeled by the dynamics of SoC, battery voltages, and charging currents, which are used to reflect the EV charging properties. The current research is aimed at grid-to-vehicle (G2V) operation. The suggested system is stable and consistent in performance with changing levels of charging (SoC) maintained at constant voltage and controlled current. In terms of charging rate, this is directly proportional to the rate of change in SoC, wherein a regulated current profile will allow a safe and smooth charging procedure without any spikes or dips. The transient current behavior and steady-state operation of the proposed LT + DBR topology ensure that the battery is not subjected to excessive stress. In terms of efficiency, the proposed system benefits from passive architecture, which eliminates switching losses associated with active converters and reduces harmonic distortion at the input. This leads to higher power transfer efficiency and improved utilization of input power.

3.3. Frequency Characteristics

Figure 8 compares the frequency response of the proposed LT + DBR and conventional DBR and DBR + DC–DC converter during the transient period (0–0.2 s) and steady state (1.45–1.5 s). The conventional DBR exhibits the highest transient deviation, with an overshoot of approximately 50.0015 Hz, an undershoot of 49.9995 Hz, and a settling time of 0.25 s. The DBR + DC–DC converter provides improved transient performance, with reduced peak deviations at about 50.001 Hz and 49.9997 Hz, as well as settling at 0.25 s.

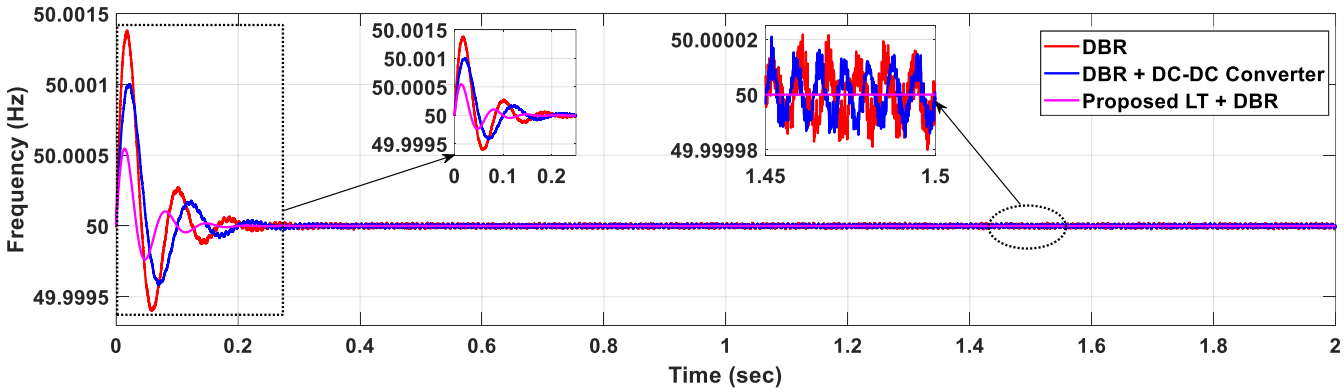

Figure 8. Frequency response characteristics comparison with the proposed LT + DBR.

3.4. Power Factor and Efficiency Characteristics

The suggested LT + DBR significantly limits the initial frequency deviation to approximately 50.00051 Hz and 49.9998 Hz and stabilizes at a significantly quicker rate of 0.12 s. The typical DBR and DBR + DC–DC converters exhibit micro-ripples of $\pm 2 \times 10^{-5}$ Hz and $\pm 1.5 \times 10^{-5}$ Hz at steady state, respectively, whereas the LT + DBR exhibits almost ripple-free waveforms near 50 Hz. This demonstrates superior transient behavior, lower distortion, and high compliance at grid frequency to charge EVs.

The power factor characteristics of the proposed LT + DBR-based EV charging station are compared with conventional DBR and DBR + DC–DC converter charging stations, as shown in Figure 9. The conventional DBR exhibits a low power factor of 0.78 due to dominant lower-order harmonics and narrow diode conduction. The incorporation of a DC–DC converter enhances the power factor to 0.9 by modeling the input current. In comparison, the proposed LT + DBR has a power factor of 0.98, whereas the LT stage smooths the input current as well, which minimizes the reactive power and harmonics. Therefore, the LT + DBR methodology is more appropriate for grid-connected EV charging that requires a high power factor.

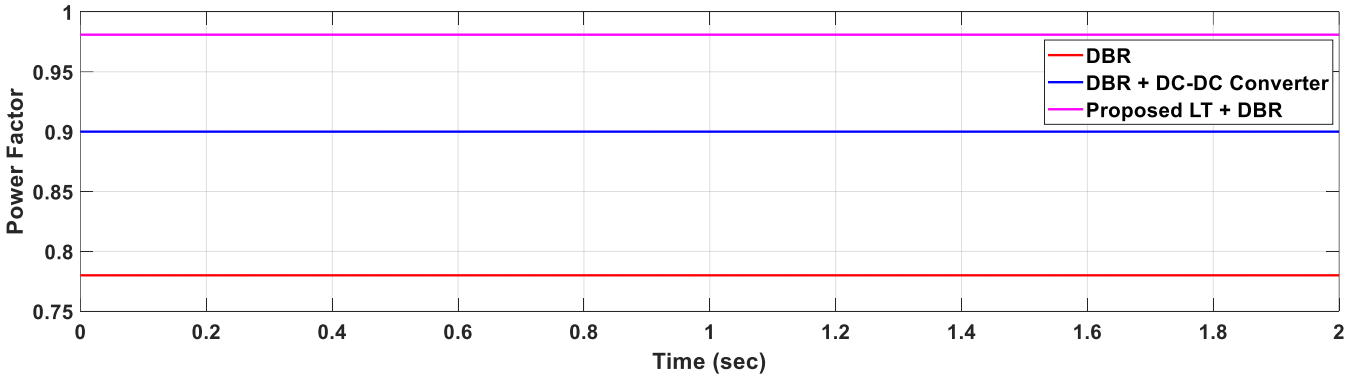

Figure 9. Power factor characteristics comparison with the proposed LT + DBR.

The efficiency characteristics of a grid-integrated LT + DBR-based EV charging station with various topologies are represented in Figure 10. The conventional DBR achieves an efficiency of 71.2%, which is constrained by its discontinuous conduction and higher harmonic content that increases system losses and fails to comply with IEEE power quality standards. The addition of a DBR and a DC converter improves efficiency to 83.4%, enhances voltage control, thus reducing the ripple and minimizing the reactive components. The efficiency of the proposed LT + DBR topology is the highest at 96.3%, where the input

current follows the supply voltage, which greatly minimizes lower-order harmonics and reactive power, allowing the system to achieve IEEE 519 requirements.

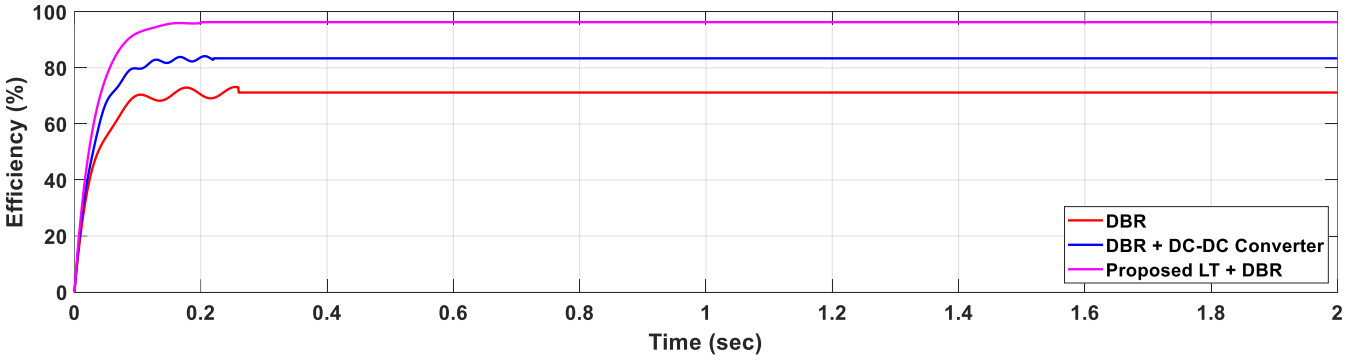

Figure 10. Efficiency characteristics comparison proposed LT + DBR.

3.5. THD Analysis

The analysis is carried out on the grid side current to observe the THD produced with conventional and proposed systems. The grid current THD is illustrated in Figure 11. The summary of the quantitative THD values obtained for current characteristics is given as follows.

- The current THD of the AC bus when the charging stations are designed with conventional DBR and conventional DBR + DC–DC converter is measured as 25% and 8%, respectively. With the proposed integrated LT + DBR charging station, the current THD is significantly reduced to 4.32%, which adheres to the permissible limit of 8% that is defined by the IEEE 519 standard. From these results, it is observed that there is a significant improvement in THD with the proposed charging station when compared to conventional methods.

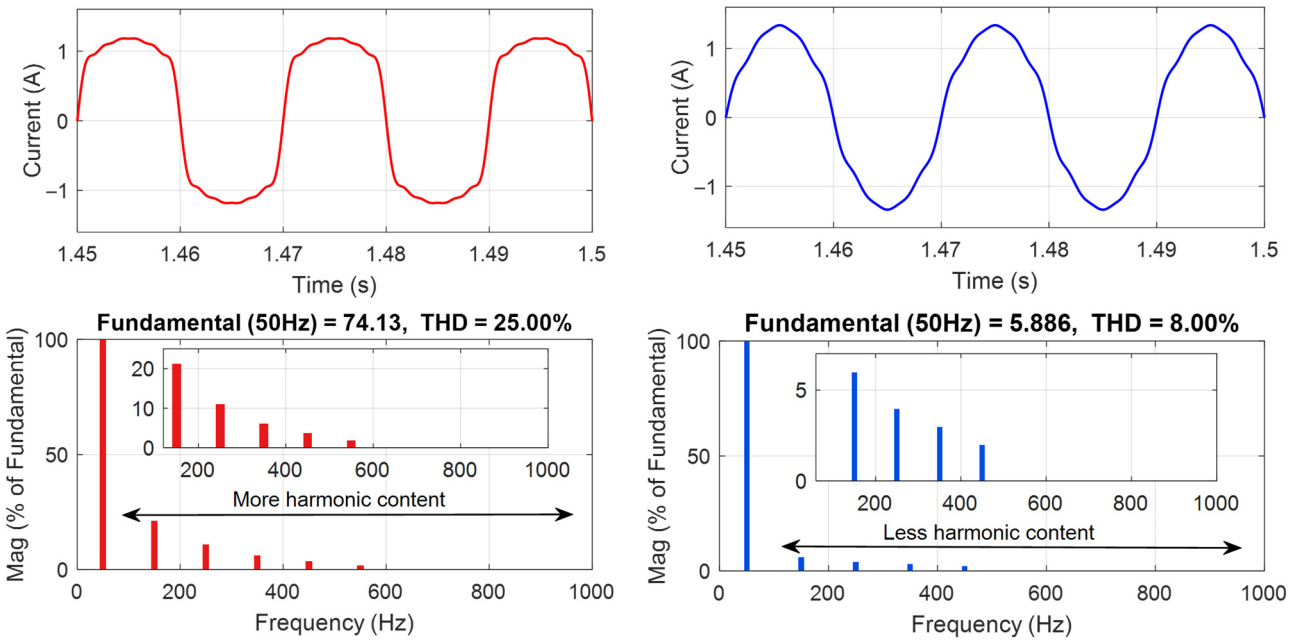

Figure 11. *Cont.*

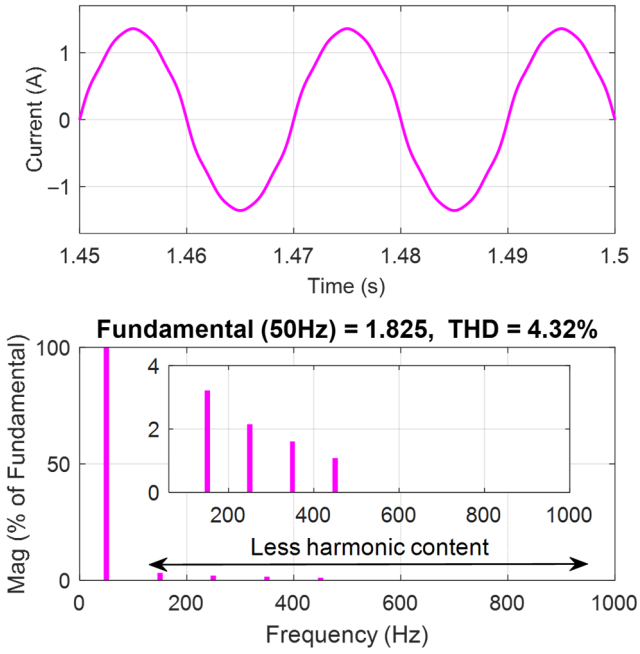

(**c**)

Figure 11. AC bus current THD obtained with (**a**) conventional DBR, (**b**) conventional DBR + DC–DC converter, and (**c**) proposed LT + DBR.

The performance metrics of the proposed and published benchmark studies are validated in Table 2. These benchmark studies report high power factor values (0.96–0.99), low THD (0.1–6.94%), and high efficiency (98.82%), with controlled PFC-based converters. The proposed LT–DBR with RC passive filter demonstrates competitive performance, achieving a power factor of 0.98, THD is 4.32%, efficiency is 96.3%, and lower voltage ripple (0.7%). Unlike existing approaches, the proposed system does not require active control, thereby ensuring reduced system complexity and cost. Hence, the comparative analysis validates the effectiveness of the proposed approach.

Table 2. Performance metric comparison of proposed and published benchmark work.

Published Work (Ref.)	Topology Type	Power Factor	Current THD (%)	Voltage Ripple (%)	Efficiency (%)	Control Requirement
[1]	Single-Phase AC–DC PFC Converter	99.79%	3.79	-	-	Yes
[6]	Y-Cell Modified Boost (YCMB) Converter	>0.99	1–3.86	3–4	up to 95	Yes
[10]	Advanced Converter-Based Systems	-	0.88	-	97.4	Yes
[14]	PFC boost converter	nearly unity	6.94	<10	90	Yes
[15]	Power Charge Pro converter	-	2.78		97.75	Yes
[16]	Diode bridge rectifier Integrated three-level DC–DC SEPIC converter	0.98	2.1	-	97	Yes
[21]	ZETA converter-based bi-directional charging station	-	-	<1.25	98.82	Yes
[23]	Closed-loop battery current-controlled zeta converter	0.96	1.9	-	91.8	Yes
Proposed Work	LT–DBR + RC Passive Filter	0.98	4.32	0.7	96.3	No

The effectiveness of the proposed integrated LT + DBR topology simulation results is summarized in Table 3. Based on the quantitative analysis of all simulation results, it can be concluded that the performance of the proposed topology is superior to that of the conventional system.

Table 3. Performance metric comparison of conventional and proposed systems.

Performance Metric	Conventional DBR	Conventional DBR + DC–DC Converter	Proposed LT + DBR
THD (%)	>25%	8%	4.32% (IEEE 519 std)
Power factor	0.78	0.90	0.98
Efficiency (%)	71.2%	83.4%	96.3%
DC output Voltage Ripple (%)	4.8%	3.4%	0.7%
Voltage Deviation Reduction	Baseline	Reduced	9.1% better regulation than DBR
Transient Overshoot (Hz)	50.0015 Hz	50.0010 Hz	50.00051 Hz (lowest)
Transient Settling Time	0.25 s	0.25 s	0.12 s (fastest)
Steady-State Frequency Ripple	$\pm 2 \times 10^{-5}$ Hz	$\pm 1.5 \times 10^{-5}$ Hz	Negligible; closest to 50 Hz
Reactive Power Consumption	High	Moderate	Very low
IEEE 519 Compliance	Fails	Partially meets	Fully compliant
Grid Compatibility	Poor	Acceptable	Excellent

4. Conclusions and Future Scope

This article proposes an integrated LT + DBR topology for an EV charging station to enhance power quality. Various power quality parameters, such as voltage characteristics, THD, frequency characteristics, power factor, and efficiency, are studied and measured for the proposed scheme. All the collective findings of the proposed scheme are summarized as follows.

- The AC bus current THD computed from the results is 25% with the conventional DBR charging station and 8% with the conventional DBR + DC–DC converter charging station. In contrast, it is notably reduced and adheres to the standard limit with the proposed integrated LT + DBR charging station, which recorded a current THD of 4.32%.
- The DC output voltage ripple content computed from the results is 4.8% with the conventional DBR charging station and 3.4% with the conventional DBR + DC–DC converter charging station. In contrast, it is notably reduced and adheres to the standard limit with the proposed integrated LT + DBR charging station, which recorded an output voltage ripple content of 0.7%.
- The power factor computed from the results is 0.78 with the conventional DBR charging station and 0.90 with the conventional DBR + DC–DC converter charging station. While in the proposed integrated LT + DBR charging station, it is greatly improved to 0.98.
- The efficiency computed from the results is 71.2% with the conventional DBR charging station and 83.4% with the conventional DBR + DC–DC converter charging station. While in the proposed integrated LT + DBR charging station, it is slightly improved to 96.3%.
- Though the current research involves a simulation-based analysis with consideration of parasitic effects, thermal variations, and component tolerances, experimental or prototype validation will be reflected in future research to expand on the proposed system in the real operating environment.
- Further research into higher power ratings, variable voltage levels, and three-phase implementations, along with how well these fast-charging EV stations fit, will be taken into account in subsequent work.
- The evaluation of cost, volume, weight, and efficiency will be analyzed clearly in future work by using hardware implementation and experimental validation of the proposed system.
- The selection of the specific core material and nonlinear magnetic properties will be discussed in the future in terms of hardware implementation and experimental validation.

https://doi.org/10.3390/engproc2026124117

- The hardware implementation and experimental evaluation will be conducted in the future to explore such practical issues as transformer feasibility, losses, EMI, inrush current, and thermal performance of the diodes.
- The proposed system will be further extended to vehicle-to-grid (V2G) operation in future work, in which the discharging properties and two-way power flow will be examined.
- The sensitivity and robustness analysis will be considered in future work to determine the performance in the variation in parameters and grid perturbations.

Thus, based on the results obtained from the proposed model, it is concluded that the proposed integrated LT + DBR charging station has successfully outperformed the conventional DBR and DBR + DC–DC converter charging stations, thereby being recommended as a well-suited solution for EV applications.

Author Contributions: Conceptualization, S.M.; methodology, S.M.; formal analysis, Y.V.P.K.; validation, S.M. and Y.V.P.K.; data curation, Y.V.P.K.; resources, S.M. and Y.V.P.K.; investigation, Y.V.P.K.; writing—original draft preparation, S.M.; writing—review and editing, S.M. and Y.V.P.K.; visualization, S.M.; supervision, Y.V.P.K.; project administration, Y.V.P.K. All authors have read and agreed to the published version of the manuscript.

Funding: This research received no external funding.

Institutional Review Board Statement: Not applicable.

Informed Consent Statement: Not applicable.

Data Availability Statement: The original contributions presented in this study are included in the article. Further inquiries can be directed to the corresponding author.

Conflicts of Interest: The authors declare no conflicts of interest.

References

1. Shariff, S.M. Single-Phase Robust Charger with High Power Quality for Electric Vehicle Application. *Eur. J. Electr. Eng. Comput. Sci.* **2024**, *8*, 50–70. [CrossRef]
2. Rana, M.M.; Alam, S.M.M.; Rafi, F.A.; Deb, S.B.; Agili, B.; He, M.; Ali, M.H. Comprehensive Review on the Charging Technologies of Electric Vehicles (EV) and Their Impact on Power Grid. *IEEE Access* **2025**, *13*, 35124–35156. [CrossRef]
3. Srivastava, A.; Manas, M.; Dubey, R.K. Electric Vehicle Integration's Impacts on Power Quality in Distribution Networks and Associated Mitigation Measures: A Review. *J. Eng. Appl. Sci.* **2023**, *70*, 32. [CrossRef]
4. Kim, I.; Park, J.-W. Integration of DC–DC Converters for OBC, LDC, and TC in Electric Vehicles. *IEEE Trans. Transp. Electrif.* **2024**, *10*, 5533–5543. [CrossRef]
5. Mamidala, S.; Prajapati, A.K. Grid-Integrated EV Charging Infrastructure. In *Recent Advances in Power Electronics and Drives—Select Proceedings of EPREC 2023; Lecture Notes in Electrical Engineering*; Springer: Singapore, 2024; Volume 1139, pp. 297–323. [CrossRef]
6. Bhati, N.; Kalla, U.K. Power Factor Corrected Y-Cell Modified Boost Converter Fed Battery Charger for EV Applications. *e-Prime-Adv. Electr. Eng. Electron. Energy* **2024**, *8*, 100550. [CrossRef]
7. Mamidala, S.; Kumar, Y.V.P. Critical Review of Key DC/DC Converters for Maximum Power Extraction in Solar-Powered Electric Vehicle Charging Stations. *Int. J. Renew. Energy Res.* **2026**, *16*. [CrossRef]
8. Neupane, R.; Magar, S.T.; Pandey, M.; Simkhada, A.; Bhattarai, B.R. Mitigation of Harmonics Due to Electric Vehicle Charging. *J. Eng. Sci.* **2024**, *3*, 101–105. [CrossRef]
9. Mamidala, S.; Venkata Pavan Kumar, Y.; Mallipeddi, R. Revolutionizing Electric Vehicle Charging Stations with Efficient Deep Q Networks Powered by Multimodal Bioinspired Analysis for Improved Performance. *Energies* **2025**, *18*, 1750. [CrossRef]
10. Mehmood, A.; Yang, F. Improvement of Power Quality of Grid-Connected EV Charging Station Using Grid-Component Based Harmonic Mitigation Technique. *Energies* **2025**, *18*, 2876. [CrossRef]
11. Kilicoglu, H.; Tricoli, P. Technical Review and Survey of Future Trends of Power Converters for Fast-Charging Stations of Electric Vehicles. *Energies* **2023**, *16*, 5204. [CrossRef]
12. Elazim, S.M.A.; Elkholy, M.H.; Elgarhy, A.; Senjyu, T.; Gamil, M.M.; Song, D.; Ali, E.S.; Ludin, G.A.; Irshad, A.S.; Lotfy, M.E. Enhancing Stability and Power Quality in Electric Vehicle Charging Stations Powered by Hybrid Energy Sources Through Harmonic Mitigation and Load Management. *Sci. Rep.* **2025**, *15*, 28077. [CrossRef]

13. Srivastava, A.; Manas, M.; Dubey, R.K. Integration of Power Systems with Electric Vehicles: A Comprehensive Review of Impacts on Power Quality and Relevant Enhancements. *Electr. Power Syst. Res.* **2024**, *234*, 110572. [CrossRef]
14. Gauswami, A.R.; Shah, H.A.; Gohil, S.N. Designing and Analyzing an EV Battery Charger with Enhanced Power Quality. *J. Electr. Syst.* **2024**, *20*, 983–991. [CrossRef]
15. Govardhan, S. Design and Implementation of Power Quality Management in EV Chargers Using Power Charge Pro Converter. *Int. J. Intell. Syst. Appl. Eng.* **2024**, *12*, 2274–2285.
16. Gupta, J.; Maurya, R.; Arya, S.R. On-Board Electric Vehicle Battery Charger with Improved Power Quality and Reduced Switching Stress. *IET Power Electron.* **2020**, *13*, 2885–2894. [CrossRef]
17. Papamanolis, P.; Bortis, D.; Krismer, F.; Menzi, D.; Kolar, J.W. New EV Battery Charger PFC Rectifier Front-End Allowing Full Power Delivery in 3-Phase and 1-Phase Operation. *Electronics* **2021**, *10*, 2069. [CrossRef]
18. Tiwari, A.K.; Sahu, L.K.; Barwar, M.K. Reliability Analysis of Multi-Level PFC Converter-Based Charger for Light EV Charging Application. *Electr. Power Compon. Syst.* **2024**, *52*, 292–307. [CrossRef]
19. Zhou, Y.; Li, H.; Ravey, A.; Péra, M.C. An Integrated Predictive Energy Management for Light-Duty Range-Extended Plug-in Fuel Cell Electric Vehicle. *J. Power Sources* **2020**, *451*, 227780. [CrossRef]
20. Maurya, R.; Arya, S.R.; Saini, R.K.; Gupta, J. On-Board Power Quality Charger for Electric Vehicles with Minimized Switching Stresses. *Electr. Eng.* **2022**, *104*, 1667–1680. [CrossRef]
21. Mamidala, S.; Kumar, Y.V.P. Zeta Converter Integration for Improved Power Quality in Bidirectional V2G Energy Charging Stations. *Results Eng.* **2025**, *28*, 107346. [CrossRef]
22. Rajkumar, S.; Balasubramanian, R.; Kathirvelu, K.P. A Comparative Analysis of Supraharmonic Emission by DC Fast Chargers Used for Electric Vehicle Charging. *Sci. Rep.* **2025**, *15*, 7992. [CrossRef]
23. Mamidala, S.; Pavan Kumar, Y.V. Closed-Loop Battery Current-Controlled Zeta Converter for Improved Power Quality in Electric Vehicle Charging Stations. *Trans. Energy Syst. Eng. Appl.* **2024**, *5*, 1–19. [CrossRef]
24. Cheepati, K.R.; Parimalasundar, E.; Suresh, K.; Reddy, C.R.; Alqahtani, M.M.; Khalid, M. Design of triple tuned passive harmonic power filter—A novel approach. *IEEE Can. J. Electr. Comput. Eng.* **2023**, *46*, 270–277. [CrossRef]
25. Alfalahi, S.T.Y.; Mansor, M.B.; Nouh, A.; Abdrabba, S.I.; Mohamed, F. Sizing passive filters for mitigation of harmonics in a low voltage network containing solar PV units. *Frankl. Open* **2025**, *10*, 100220. [CrossRef]
26. Harahap, P.; Hamid, M.I.; Hazmi, A. Comprehensive review of advanced multi-pulse rectifier technology and its application in electric vehicle fast charging systems. *Andalasian Int. J. Appl. Sci. Eng. Technol.* **2025**, *5*, 45–54. [CrossRef]
27. Munoz, C.A.; Baier, C.R.; Hernández, J.C.; Marciel, E.I.; Melin, P.E. Series compensated low frequency transformers emulating multipulse rectifiers for harmonic current content minimization in electrical grids. *IEEE Access* **2025**, *13*, 107455–107466. [CrossRef]
28. Yilmaz, M.; Krein, P.T. Review of battery charger topologies, charging power levels, and infrastructure for plug-in electric and hybrid vehicles. *IEEE Trans. Power Electron.* **2013**, *28*, 2151–2169. [CrossRef]
29. Tayri, A.; Ma, X. Grid Impacts of Electric Vehicle Charging: A Review of Challenges and Mitigation Strategies. *Energies* **2025**, *18*, 3807. [CrossRef]
30. Etanya, T.F.; Tsafack, P.; Ngwashi, D.K. Grid-Connected Distributed Renewable Energy Generation Systems: Power Quality Issues and Mitigation Techniques—A Review. *Energy Rep.* **2025**, *13*, 3181–3203. [CrossRef]
31. Ugwuagbo, E.; Ray, B.; Balogun, A.; Okafor, F.; Sul, J.; Nabi, N.; Datta, U. Power quality assessment and harmonic mitigation at the point of common coupling of industrial load. *J. Control Autom. Electr. Syst.* **2026**, *37*, 397–410. [CrossRef]

Disclaimer/Publisher's Note: The statements, opinions and data contained in all publications are solely those of the individual author(s) and contributor(s) and not of MDPI and/or the editor(s). MDPI and/or the editor(s) disclaim responsibility for any injury to people or property resulting from any ideas, methods, instructions or products referred to in the content.