engineering proceedings

MDPI

Proceeding Paper

Innovated Sustainable Robotics Solutions for Green Construction of Sand-Free Plastering †

W. F. Tang *, Shu-Lun Mak, Ma Ka Man and Chan Tsz Him

Department of Construction and Quality Management, School of Science and Technology, Hong Kong Metropolitan University, Hong Kong, China; lunmak@gmail.com (S.-L.M.); kma@hkmu.edu.hk (M.K.M.); tshchan@hkmu.edu.hk (C.T.H.)

* Correspondence: fwftang@hkmu.edu.hk

† Presented at 8th International Conference on Knowledge Innovation and Invention 2025 (ICKII 2025), Fukuoka, Japan, 22–24 August 2025.

Abstract

River sand is an essential resource for the construction industry and is extensively used worldwide. However, its limited availability has led to supply shortages and rising costs. As a non-renewable resource, sand accumulates behind river dams, and its extraction using mechanical dredgers harms river ecosystems. Overexploitation has depleted riverbeds and caused significant environmental concerns. The construction sector faces challenges such as water and sand scarcity, along with the use of substandard sand. Growing awareness of the environmental damage caused by excessive sand use has prompted researchers to explore alternatives to sand in cement and concrete. One promising approach is sand-free plastering, which is being investigated as a sustainable alternative to traditional sand-based plaster. We analyzed the physical properties of sand-free plaster materials and the development of an automated robotic system for applying these materials in green buildings. By promoting sustainability, these innovations aim to address the challenges posed by sand scarcity while minimizing environmental impacts.

Keywords: sustainability; sand-free plastering; robotic solution; green building; green construction materials

check for updates

Academic Editors: Teen-Hang Meen, Chun-Yen Chang and Cheng-Fu Yang

Published: 1 April 2026

Citation: Tang, W.F.; Mak, S.-L.; Man, M.K.; Him, C.T. Innovated Sustainable Robotics Solutions for Green Construction of Sand-Free Plastering. *Eng. Proc.* **2025**, *120*, 74. https://doi.org/10.3390/engproc2025120074

Copyright: © 2026 by the authors. Licensee MDPI, Basel, Switzerland. This article is an open access article distributed under the terms and conditions of the Creative Commons Attribution (CC BY) license (https://creativecommons.org/licenses/by/4.0/).

1. Introduction

Recently, the construction industry has emphasized adopting sustainable practices and materials. Sand, a natural fine aggregate formed through rock weathering over millions of years, has been a critical component. However, with growing environmental concerns and the urgency to combat climate change, there is a rising demand for eco-friendly alternatives to conventional construction methods. Sand-free plastering is one such innovative solution aimed at minimizing environmental impacts. Traditionally, sand has been integral to plastering due to its ability to enhance strength, durability, and workability. However, sand mining has led to severe environmental issues, including habitat destruction, water level depletion, and erosion. Additionally, transporting sand contributes to pollution through carbon emissions and energy consumption. Many regions also face sand scarcity, driving up costs and raising concerns about the sustainability of current plastering methods.

A viable alternative involves using recycled or unconventional materials, such as slag, fly ash, and rice husk ash, to replace sand partially or entirely. These materials not only reduce landfill waste but also offer unique properties that enhance plaster sustainability. Innovations in binders and admixtures have further enabled the development of sand-free

plastering compounds with excellent performance. Manual plastering methods, which rely heavily on skilled labor, are time-consuming and costly. Automating the plastering process through robotic systems can address these challenges by reducing labor expenses and improving efficiency.

We examined a smart robotic system for sand-free plastering, aligning with green building principles. By minimizing the use of sand, this approach protects natural resources and reduces environmental damage. Moreover, robotic systems ensure precise application, reducing material wastage and promoting eco-friendly construction practices.

2. Sand Plastering

Sand plastering involves the use of finely textured, clean-washed sand for both internal and external rendering. The sand is carefully cleaned before application to prevent salt stains and reduce the risk of moisture absorption from the air. Often referred to as sand-based plastering or cement plastering, this method is a widely adopted technique for surface rendering and finishing in Figure 1.



Figure 1. Sand plastering for external wall.

Sand plastering involves mixing sand and cement in precise ratios to create a plastering material [1]. This method has been widely used for years due to its numerous advantages, including durability, strong adhesion to surfaces, versatility across various substrates, customizable textures, and cost-effectiveness compared to alternative methods. However, thorough testing is required to evaluate the physical properties of sand-free plastering materials in comparison to traditional river sand-based plastering.

3. Sand-Free Plastering

"Sand-free plaster" is a specially formulated gypsum-based material designed to address challenges related to sand scarcity and quality. This innovative plaster ensures high-quality results while promoting faster construction through fewer operation cycles, thereby saving both time and labor. Its self-curing properties significantly reduce the amount of water required for curing. The application process involves mixing the sand-free plaster with water and using a spraying method to apply it to walls, ceilings, or reinforced cement concrete (RCC) surfaces, as shown in Figure 2. Unlike traditional gypsum plaster, sand-free plaster offers improved performance as it is damp-proof and provides a crack-free finish, making it an excellent alternative.

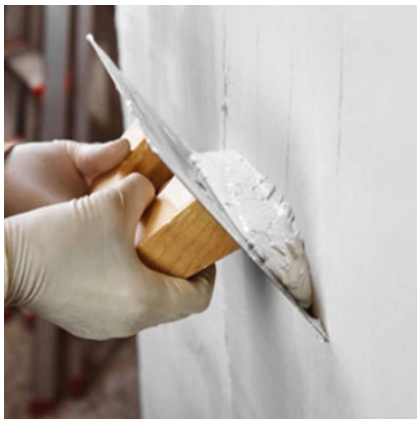

Figure 2. Sand-free plastering for wall.

4. Material Composition

The key component of sand plastering is sand, which provides the plaster with its body and texture. The material composition typically includes aggregates, additives, cement, and water. The type of sand used depends on the desired application and quality, though fine-grained sands are generally preferred. Cement is added as a binding agent, securing the sand particles together and giving the plaster its strength. Water is mixed with the sand and cement to form a workable paste, activating the cement and enabling easy application and spreading. Additives are often incorporated into sand plaster mixtures to enhance specific properties. For instance, lime can improve workability and reduce the likelihood of cracking, while polymer-based or acrylic additives can enhance durability and adhesion [2]. The advantages of sand-free plastering and sand plastering are presented in Table 1.

Table 1. Sand-Free Plastering vs. Sand Plastering.

Feature	Sand-Free Plastering	Sand Plastering
Weight reduction	Minimizes load on ceilings, enhancing building durability	Does not significantly reduce the ceiling load
Protective properties	Works as a protective layer, preventing moisture, erosion, and cracks	Protects walls from moisture and erosion, extending lifespan
Material efficiency	Reduces the need for scaffolding, eliminates cement and river sand	Requires cement, river sand, and scaffolding for application
Appearance	Provides clean, glossy finishes for walls and ceilings	Offers a smooth surface finish, but less glossy
Material wastage	Reduces material wastage through efficient application	Higher potential for material wastage due to manual processes
Water usage	Saves water due to self-curing properties	Requires significant water for curing
Surface transformation	Converts irregular surfaces into smooth and polished finishes	Smoothens surfaces but may not achieve a polished look
Thermal efficiency	Improves thermal efficiency by reducing heat transfer	Limited impact on thermal performance
Fire resistance	Fire-resistant properties	Offers fire-resistant capabilities

4.1. Cement Plastering

For centuries, traditional methods have been used to plaster walls, varying across regions and cultures [3]. Despite these differences, certain techniques and materials are commonly employed. Traditional plastering is a time-consuming process, requiring skilled

labor and assistants, which increases construction time and labor costs in the building industry. Nowadays, plastering remains a challenging task for untrained workers, and the need for specialized labor adds to expenses [4]. Additionally, manual plastering often risks uneven or rough wall finishes. Advancements in plastering technology, such as improved processing methods, have significantly reduced drying times. This allows projects to be completed in hours rather than the weeks it once required, benefiting plasterers by speeding up completion times.

Lime plaster is one of the oldest methods, made by mixing lime, sand, and water in specific proportions. It is breathable, flexible, and resistant to cracking, making it ideal for use in heritage buildings where it complements traditional materials [5]. Cement plaster, another long-standing technique, uses a mix of cement, sand, and water. It provides a durable and robust finish, commonly used in modern construction. Cement plaster is applied in layers, with each layer needing to dry before the next is added. Gypsum plaster, also known as plaster of Paris, is made from gypsum, water, and occasionally sand. It dries quickly and is widely used for interior wall finishes. Gypsum plaster offers additional benefits, such as fire resistance and soundproofing.

4.2. Automatic Plastering

People have become increasingly selective about the quality of interior wall finishes in homes, adhering to higher technical standards [6]. The automatic plastering method, also known as machine or robotic plastering, utilizes specialized machines or robots to apply plaster to walls and ceilings. This modern approach offers numerous advantages, including greater speed and consistency compared to traditional methods. Automatic plastering machines are specifically designed for plastering tasks. They typically include a container to hold pre-mixed plaster, a mechanism for mixing, and a system to pump the plaster onto the target surface [7]. The operator guides the machine while it sprays plaster onto the wall or ceiling. These machines can be adjusted to control the thickness or smoothness of the plaster, and some are equipped with mechanisms to ensure an even and smooth finish. In manual plastering, the level of skill varies among workers, leading to inconsistencies. However, the adoption of modern equipment in recent years has improved key aspects of plastering, such as perpendicularity, flatness, and compactness. Despite these advancements, some degree of variation still exists [6].

5. Automatic Sand-Free Plastering System

A cost-effective, automatic smart robotic wall plastering system was developed to streamline the plastering process. This system integrates proven and existing technologies, enabling it to work with a wide range of plaster materials efficiently.

5.1. Hardware

The system architecture incorporates a safety-certified collaborative robot to carry out the spraying operation. To overcome its limited reach, the robot is mounted on a lifting platform, which extends its vertical range and allows it to cover larger wall areas effectively, as shown in Figure 3.

The sand-free wall plastering system comprises several key components, including a sprayer machine, a visionary camera, a distance sensor, a Universal Robots (UR) controller, and a collaborative robot equipped with a tool changer interface [8]. During testing, the sprayer's weight was higher than anticipated. With the sprayer weighing 3 kg, the leveling tool 2 kg, and the depth camera 1.5 kg, the total exceeded the robot's maximum payload capacity of 5 kg (practically limited to 4 kg) in Figure 4. To address this limitation, a tool changer configuration was introduced, requiring the operator to manually switch between

attachments such as the sprayer and leveling tool. The visionary camera was mounted directly on the lifting platform. Although this makes capturing images more challenging, it eliminates the need to swap the camera, streamlining the workflow. A worm pump is used in the system to transfer materials. This pump operates by using a rotating screw to move fluids or solids through a tube in a specific direction, ensuring efficient material flow.

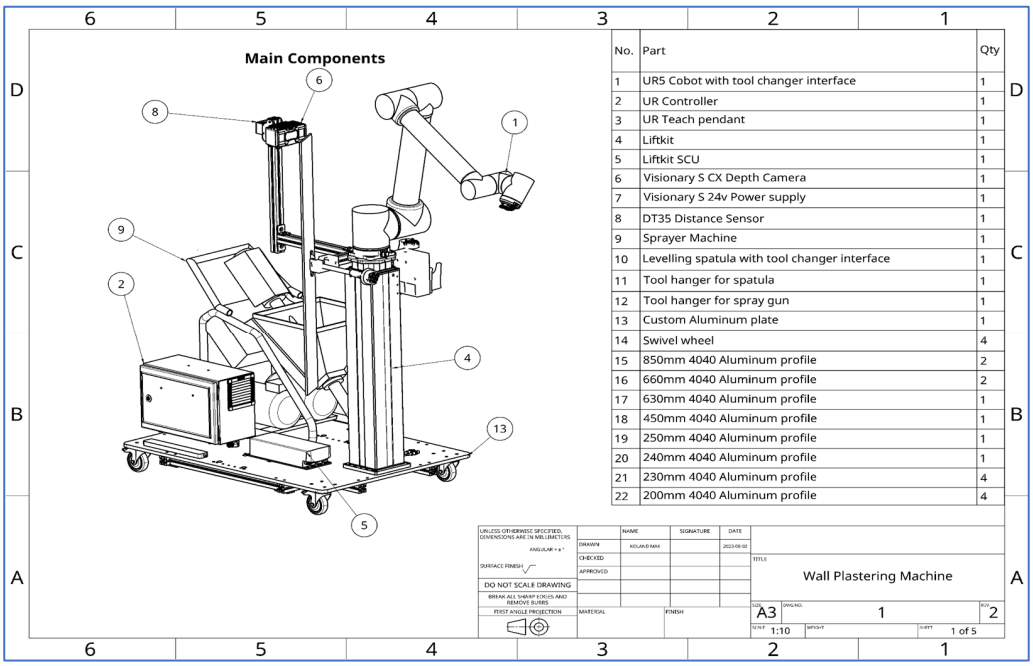

No.	Part	Qty
1	UR5 Cobot with tool changer interface	1
2	UR Controller	1
3	UR Teach pendant	1
4	Liftkit	1
5	Liftkit SCU	1
6	Visionary S CX Depth Camera	1
7	Visionary S 24v Power supply	1
8	DT35 Distance Sensor	1
9	Sprayer Machine	1
10	Levelling spatula with tool changer interface	1
11	Tool hanger for spatula	1
12	Tool hanger for spray gun	1
13	Custom Aluminum plate	1
14	Swivel wheel	4
15	850mm 4040 Aluminum profile	2
16	660mm 4040 Aluminum profile	2
17	630mm 4040 Aluminum profile	1
18	450mm 4040 Aluminum profile	1
19	250mm 4040 Aluminum profile	1
20	240mm 4040 Aluminum profile	1
21	230mm 4040 Aluminum profile	4
22	200mm 4040 Aluminum profile	4

Figure 3. Wall plastering machine.



Figure 4. 3D depth camera.

The 3D depth camera is used to measure the wall's geometry before the spraying process begins. It captures up to 30 color depth images per second and operates effectively in complete darkness or daylight conditions of up to 40 klx. Each recording contains more than 320,000 depth and color intensity values. The camera features a structured light stereo camera and two sensors for detecting wall surfaces. Initially, basic calculations were performed to determine the minimum plate thickness. In Figure 5, this was carried out by modeling the plate as a brick and applying a static, uniform load at its center. A safe displacement value was then assumed to ensure the design's reliability.

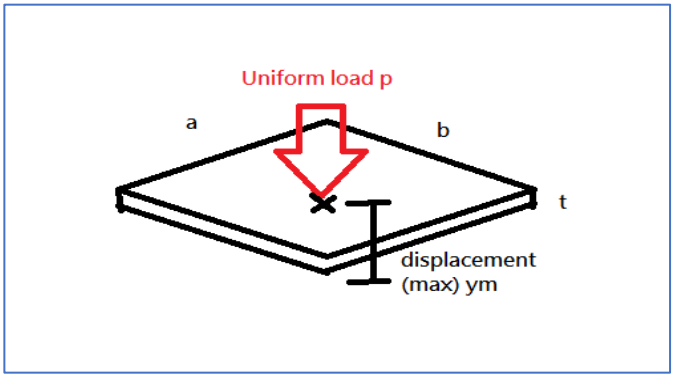

Figure 5. Diagram of uniform load.

However, when the robot is mounted and moving at full speed, a major bending is observed. Therefore, 40 × 40 Aluminum profiles were later added to support the plate and to stop the pillar from wobbling too much. This proved to be a valid solution.

The levelling tool is made from a piece of acrylic board and some 3D printed adaptors (Figures 6 and 7). Different thickness was tested to determine the compromise between weight and strength. The entire assembly is close to 2 kg. The sprayer handle that comes with it is designed for human use and has an organic design [9]. This poses massive challenges to design and is adopted for machine use. The design uses an image as a reference, then rapidly iterates on using 3D printing to achieve the correct dimensions. The sprayer machine can be selected from any brand or model. However, modifications must be made to the spray head to be robot-compatible.

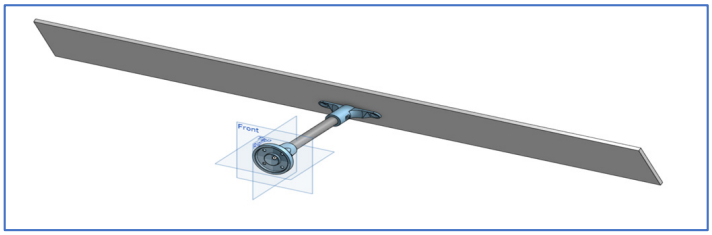

Figure 6. Levelling tool.



Figure 7. Levelling tool.

The tool changer (Figure 8) is automatically toggled using pneumatics [10]. However, it requires a dedicated compressor for this task, and tools are changed automatically with high precision and rigid tool racks.

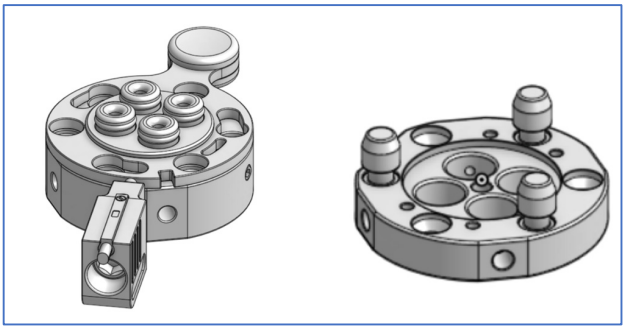

Figure 8. Tool changer.

The control system is responsible for communication and control of the whole system with a linearly operated user interface shown in Figures 9 and 10.

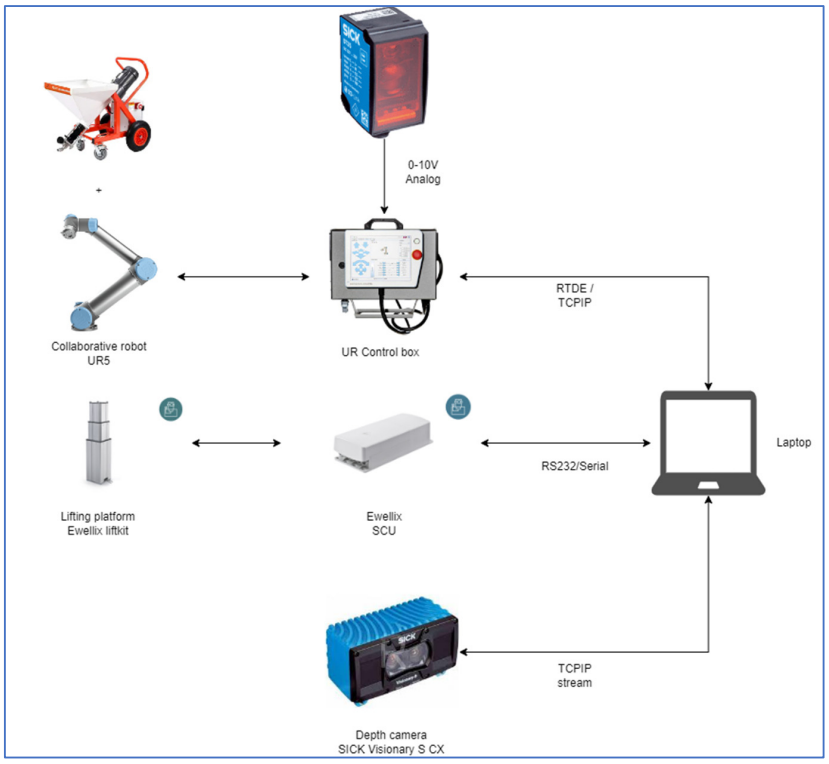

Figure 9. Different parts of wall plastering machine.

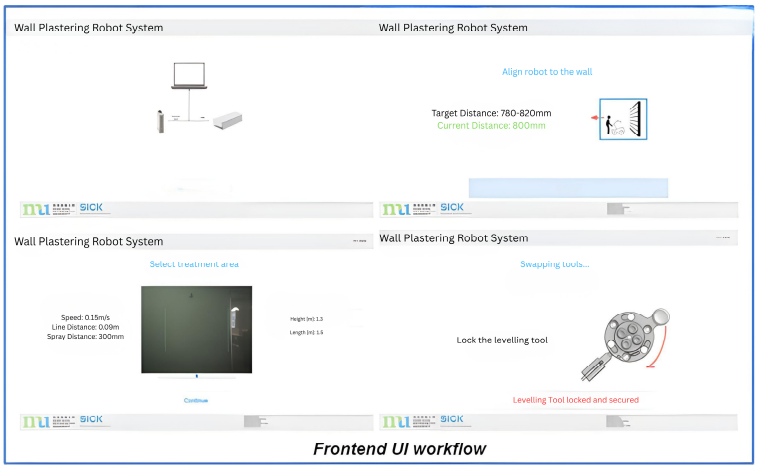

Figure 10. Frontend UI workflow.

The hardware includes a user interface, a lift kit, a UR5 cobot, and visionary S CX depth camera.

The operational procedure is outlined as follows in Figure 11.

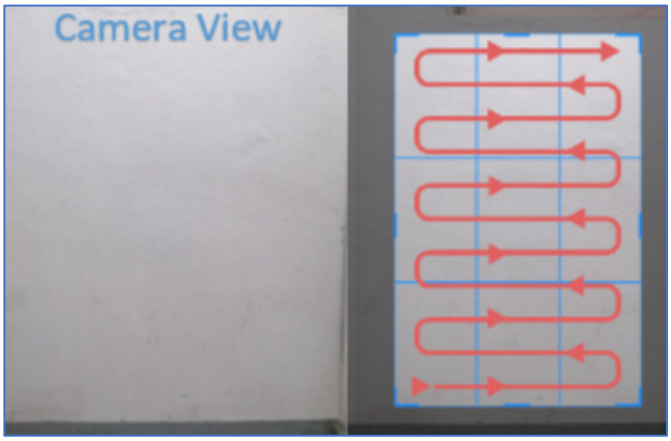

Figure 11. Camera view of select range of area to plaster. The arrow shows the direction of the camera.

- Material preparation: Mix the plaster material with water according to the recommended ratio and pour the mixture into the hopper.
- System initialization: On the user interface, click "Start" to establish communication with all devices and move the robotic arm to its initial position.
- Distance calibration: Manually position the system at the appropriate operational distance. The user interface provides guidance throughout this step.
- Region selection: Input the X, Y coordinates along with the width and height of the treatment region, followed by the desired spraying parameters.
- Confirmation: Verify the input values displayed on the prompt and proceed if they are correct. Wait for the spraying process to complete.
- Sprayer tool unloading: Manually remove the sprayer tool and place it in the designated tool rack. Press "Continue" to proceed.
- Levelling tool loading: Manually attach the levelling tool and press "Continue." Wait for the levelling process to complete.
- Levelling tool unloading: Remove the levelling tool.
- Sprayer tool reloading: Reattach the sprayer tool.
- Region transition: Move the platform to the next treatment region and repeat the process from Step 2.

5.2. Software Design

5.2.1. Communication and System Integration

Trajectory planning is performed on the PC, where paths are interpolated and transmitted to the UR controller via the real-time data exchange interface. This configuration allows the PC to maintain full control over robotic motion using the ServoJ command. To streamline implementation, predefined waypoints—such as the locations of the sprayer hanger, levelling device hanger, and home position—are hard-coded into the URScript. The Liftkit is similarly controlled via serial commands issued from the PC.

5.2.2. Spraying Module

The depth camera initially converts the depth map into a point cloud, performs point cloud registration, and then reconstructs the depth map. The pre-treated wall surface is represented as an N × M array, indicating wall thickness. A target depth map is generated

by subtracting the measured depth from the desired profile, which serves as a cost function for optimal control, as illustrated in Figure 12.

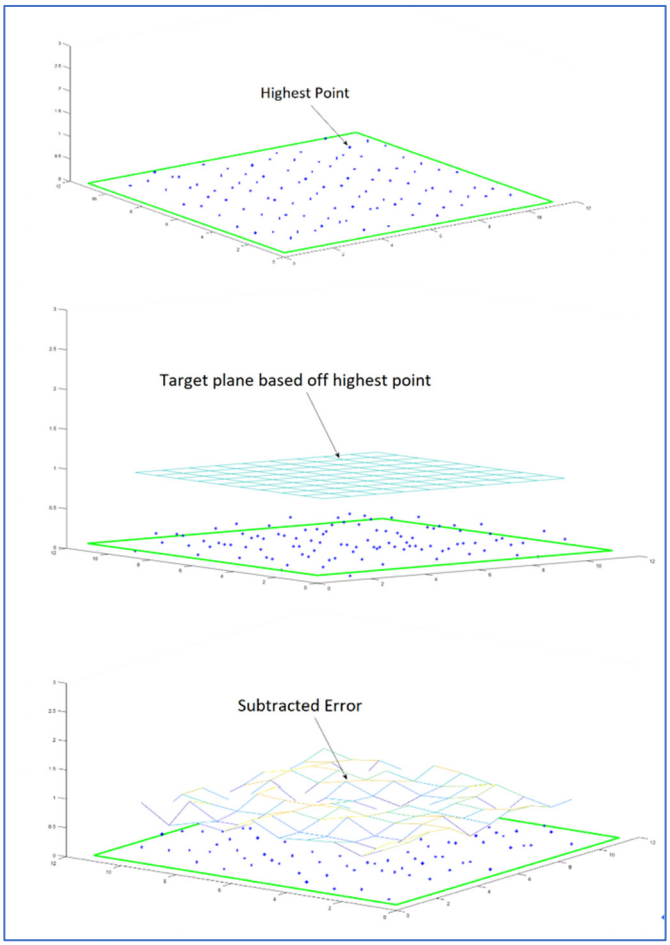

Figure 12. Cost function visualization. (Blue docks: Individual points representing the wall surface, Green square: The boundary of the wall surface, Color mesh: Subtracted error).

Before spraying, the spray pattern is calibrated using the depth camera and modeled as a two-dimensional X × Y array.

A calibrated sprayer model is established by using Equation (1).

$$Sprayer\ model\ = \begin{bmatrix} 0.1 & \dots & 0.2 \\ \vdots & \ddots & \vdots \\ 0.1 & \dots & 0.1 \end{bmatrix} \text{mm}^2/\text{s} \quad (1)$$

The trajectory follows a snake-like pattern; however, due to physical constraints inherent to most spraying systems, the sprayer cannot be abruptly started or stopped. The sprayer model exhibits a two-dimensional bell-shaped distribution, which is a function of spray distance, air pressure, nozzle geometry, and the viscosity of the sprayed material. The trajectory is defined using a simple snake pattern; however, due to physical constraints inherent to most spraying systems, the sprayer cannot be abruptly started or stopped. Consequently, the entire spraying operation must be executed continuously without interruption. The snake pattern generator utilizes X, Y coordinates, width, height, and line thickness to define the bounding box of the treatment region and generate key waypoints along the snake path. The controller then integrates the wall model and the calibrated sprayer model to perform Model Predictive Control (MPC), an optimization routine that

evaluates multiple future trajectories. The objective function is derived from the subtracted target M × N array and penalizes overshooting, thereby ensuring precise and efficient spraying performance.

$$U = \text{argmin}(f(x)) \tag{2}$$

where the cost is defined as follows.

$$f(x) = \sum_{i=1}^{H} \left(k_1 u^2 + k_2 \sum \text{err} \right) \tag{3}$$

Consequently, the entire spraying operation must be executed continuously without interruption. The snake pattern generator utilizes the X, Y coordinates, width, height, and line thickness to define the bounding box of the treatment region and generate key waypoints. The controller integrates the wall model and calibrated sprayer model to perform model predictive control (MPC), an optimization routine that evaluates multiple future trajectories (Figure 13). The objective function is based on the subtracted M × N target array and penalizes overshooting.

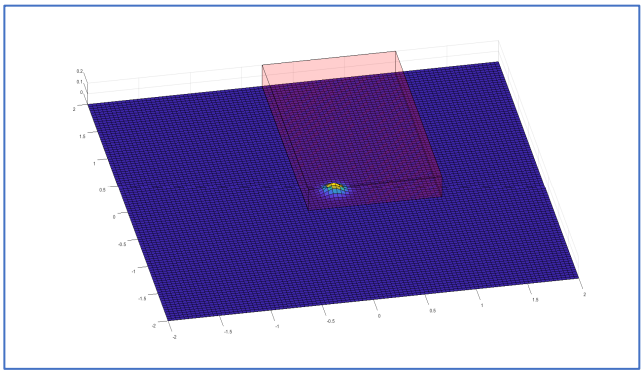

Figure 13. Simulated wall. (Blue surface: Wall, Red docks: Sprayer coverage area, Yellow/green/blue docks: Distribution of quantity by the sprayer).

5.2.3. Levelling Module

Levelling is conducted using the robot's force mode, which enables force feedback control [11]. After the levelling tool is attached, the robot probes the wall with a predefined force. Upon contact, a consistent upward levelling motion is executed until the entire treatment region is covered. Figure 14 illustrates the successful plastering process achieved by the robotic system.

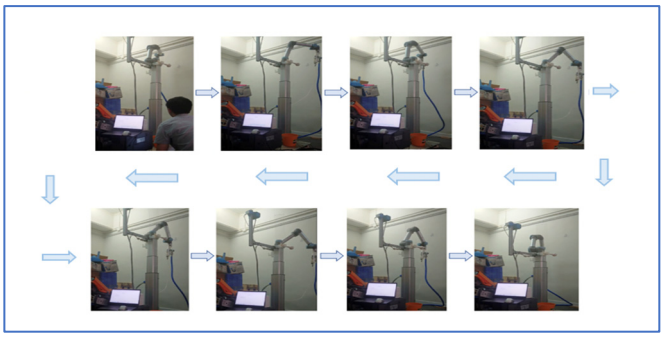

Figure 14. Automatic sand-free plastering mechanism.

Before spraying, the spray pattern is first calibrated as a 2D array with the depth camera, where the spray pattern could be assumed to be an X by Y array.

6. Future Direction

To ensure suitability for plastering applications, further investigation into sand-free plastering materials is required. Ongoing research should prioritize enhancing the mechanical and physical properties of these materials, alongside a comprehensive understanding and optimization of their intrinsic characteristics. As a sustainable alternative, the present study evaluates the feasibility of reusing oyster shell waste. Given their specific gravity and fineness comparable to that of conventional sand, and their primary composition of calcium carbonate, oyster shells present a promising candidate for material substitution, as illustrated in Figure 15.

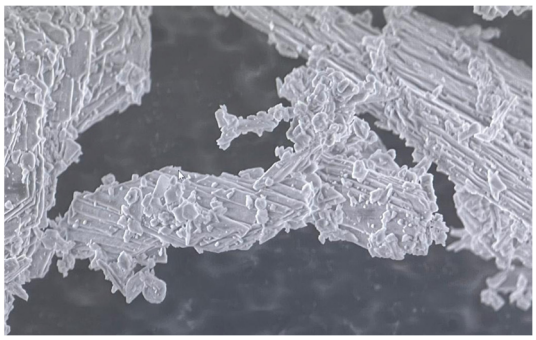

Figure 15. SEM images of oyster shells.

However, due to the marine nature, it is essential to handle salinity and impurities and avoid any salt damage. The initial processing protocol requires a cleaning stage to remove impurities and organic matter, which is achieved through dehydration into a standardized form [12]. To ensure material consistency, an industry specification should be established, mandating that particles pass through a 5 mm or 4.75 mm sieve. As illustrated in Figure 16, the cleaning process effectively eliminates surface debris from the oyster shells.

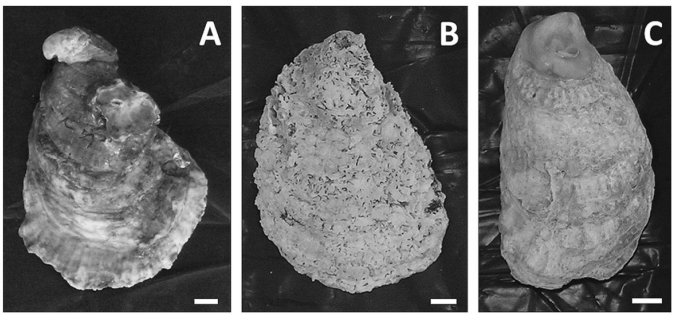

Figure 16. Visual comparison of oyster shells at various treatment stages. (**A**) Remain uncleaned, (**B**) Cleaned, (**C**) Cleaned and dehydrated.

7. Conclusions

The use of sand as a construction material has raised significant environmental concerns, particularly the degradation of river channels. The increasing scarcity of sand and water resources, coupled with the limited structural stability of sand-based materials, poses substantial challenges for the construction industry [13]. In response, contemporary construction practices have begun to adopt innovative green alternatives, such as sand-free plastering materials, which offer a sustainable substitute for conventional sand, water, and cement-based methods. Despite their potential, the implementation of sand-free plastering techniques remains hindered by a lack of technical expertise and a comprehensive understanding of material behavior. Consequently, further research is required to optimize the composition of sand-free materials, with emphasis on improving their mechanical and

physical properties. Critical parameters for investigation include melting point, compressive strength, and long-term durability. The effective deployment of sand-free plastering systems also necessitates a detailed analysis of the structural design of process components and the control architecture of intelligent automated plastering solutions. Additional considerations should address the system's maintenance requirements, scalability, and overall operational efficiency to ensure practical viability in construction environments.

Author Contributions: Conceptualization, W.F.T. and S.-L.M.; methodology, S.-L.M.; software, C.T.H.; validation, W.F.T. and M.K.M.; formal analysis, W.F.T. and M.K.M.; investigation, C.T.H. and M.K.M. All authors have read and agreed to the published version of the manuscript.

Funding: The work described in this paper is part of the research project, which is called 'Development of Sand-Free Plastering Solutions for Green Building' (2021/3007) and was substantially supported by a grant from the Research Matching Grant Scheme, Hong Kong Metropolitan University.

Institutional Review Board Statement: Not applicable.

Informed Consent Statement: Not applicable.

Data Availability Statement: No new data were created or analyzed in this study. Data sharing is not applicable to this article.

Conflicts of Interest: The authors declare no conflict of interest.

References

1. Gupta, U.; Ahire, H. A Review Paper on Evolution of Sand in Construction. *Asian J. Converg. Technol. (AJCT)* **2018**, *4*. Available online: https://asianssr.org/index.php/ajct/article/view/824 (accessed on 3 April 2024).
2. Kadam, S.B.; Singh, Y.; Li, B. Strengthening of Unreinforced Masonry Using Welded Wire Mesh and Micro-Concrete—Behaviour under In-Plane Action. *Constr. Build. Mater.* **2014**, *54*, 247–257. [CrossRef]
3. Econaur. Sand Free Plaster—Mixture That Eliminates the Use of Sand in Construction. *Medium (Blog)*, 18 February 2019. Available online: https://prakritigroupindia.medium.com/sand-free-plaster-mixture-that-eliminates-the-use-of-sand-in-construction-9913fae79598 (accessed on 16 June 2024).
4. Kumar M, R.; V, A.; Sharma, C.S.; Mujhahid, S.; Alim, A. Development and Fabrication of Semi-Automated Wall Plastering Machine. *SSRN* **2019**. [CrossRef]
5. Biradar, A.; Shejwal, V.; Barate, A.; Barate, S. Automatic Wall Plastering Machine. *Int. J. Eng. Tech. Res. (IJETR)* **2016**, *4*, 22–32.
6. Dong, M.; Yang, Z. Multi-Parameter Integrated Experimental Analysis of Wall Compaction Effect on Semi-Automatic Plastering Machine. *MATEC Web Conf.* **2015**, *34*, 02013. [CrossRef]
7. Askar, A.N.; Rau, L.P. Design of automatic wall plastering machine. *Int. J. Eng. Sci. Res. Technol.* **2017**, *6*, 543–555. [CrossRef]
8. Arivazhagan, B. Automatic Plastering Machine. *Int. J. Adv. Res. Electron. Commun. Instrum. Eng. Dev.* **2014**, *2*, 29–35.
9. Pritschow, G.; Kurz, J.; Zeiher, J.; McCormac, S.E.; Dalacker, M. On site Mobile Plastering Robot: A Practical Design Concept. In Proceedings of the 14th IAARC/IFAC/IEEE International Symposium on Automation and Robotics in Construction, Pittsburgh, PA, USA, 1997. Available online: https://www.iaarc.org/publications/proceedings_of_the_14th_isarc/onsite_mobile_plastering_robot_a_practical_design_concept.html (accessed on 23 September 2024).
10. Naveen, V.; Babu, V. Experimental Study of Plastering Effect During Casing While Drilling. In Proceedings of the Abu Dhabi International Petroleum Exhibition and Conference, Abu Dhabi, United Arab Emirates, 10–13 November 2014.
11. Tang, W.F.; Mak, S.L.; Li, C.H. Development of Sand-Free Plastering Solutions for Green Building. In Proceedings of the 2020 IEEE International Symposium on Product Compliance Engineering-Asia (ISPCE-CN), Chongqing, China, 6–8 November 2020.
12. Mak, S.L.; Wu, T.M.Y.; Tang, F.W.F.; Li, J.C.H.; Lai, C.W. A review on utilization of plastic wastes in making construction bricks. *IOP Conf. Ser. Earth Environ. Sci.* **2021**, *706*, 012001. [CrossRef]
13. Mak, S.L.; Wu, M.Y.T.; Tang, W.F.; Li, C.H.; Chan, T.W. A Review on mechanical properties modification of polymer with talc powder. In Proceedings of the 2021 IEEE International Symposium on Product Compliance Engineering-Asia (ISPCE-ASIA), Taipei, Taiwan, 30 November–1 December 2021; pp. 1–5.

Disclaimer/Publisher's Note: The statements, opinions and data contained in all publications are solely those of the individual author(s) and contributor(s) and not of MDPI and/or the editor(s). MDPI and/or the editor(s) disclaim responsibility for any injury to people or property resulting from any ideas, methods, instructions or products referred to in the content.