engineering proceedings

MDPI

Proceeding Paper

Towards Sustainable Waste-to-Energy Solutions: Techno-Economic Insights from Scrap Tyre Pyrolysis in Nigeria †

Olusegun A. Ajayi [1], Daniel Iyanu Oluwatogbe [1], Umar Mogaji Muhammed [1,2] and Toyese Oyegoke [1,2,*]

[1] Department of Chemical Engineering, Ahmadu Bello University, Zaria 810106, Nigeria
[2] CAD Engineering of Processes & Reactive Interfaces (PT-CEPRIs) Group, Department of Chemical Engineering, Ahmadu Bello University, Zaria 810106, Nigeria
* Correspondence: oyegoketoyese@gmail.com
† Presented at the 4th International Electronic Conference on Processes, 20–22 October 2025; Available online: https://sciforum.net/event/ECP2025.

Abstract

This study assessed the techno-economic performance and energy efficiency of scrap tyre valorization through pyrolysis in Nigeria, comparing two configurations: a pyrolysis plant integrated with power generation (Scenario 1) and a standalone pyrolysis plant (Scenario 2). Process simulations were carried out using Aspen Plus V12, and cost estimations were performed with the Aspen Process Economic Analyzer. For a feed capacity of 20 tons per hour, the pyrolysis process yielded steel wire (15.04%), char (35.57%), pyro-diesel (37.94%), gas (7.91%), and heavy oil (3.54%). Scenario 2 achieved a higher energy efficiency (94.44%) than Scenario 1 (51.23%). However, Scenario 1 demonstrated superior economic performance, with a Net Present Value (NPV) of USD 28.65 million and an Internal Rate of Return (IRR) of 34.48%, despite its higher capital investment of USD 27.63 million. Sensitivity analysis revealed that the selling price of pyro-diesel and the cost of scrap tyres were the most influential parameters affecting profitability. The findings provide useful insights for optimizing scrap tyre pyrolysis systems toward sustainable waste-to-energy applications in developing regions.

Keywords: scrap tyre pyrolysis; techno-economic analysis; energy efficiency; waste-to-energy; sustainability assessment

check for updates

Academic Editor: Omprakash Sarkar

Published: 2 February 2026

Citation: Ajayi, O.A.; Oluwatogbe, D.I.; Muhammed, U.M.; Oyegoke, T. Towards Sustainable Waste-to-Energy Solutions: Techno-Economic Insights from Scrap Tyre Pyrolysis in Nigeria. *Eng. Proc.* **2025**, *117*, 41. https://doi.org/10.3390/engproc2025117041

Copyright: © 2026 by the authors. Licensee MDPI, Basel, Switzerland. This article is an open access article distributed under the terms and conditions of the Creative Commons Attribution (CC BY) license (https://creativecommons.org/licenses/by/4.0/).

1. Introduction

The rapid growth of the global population and industrial activities has driven a corresponding increase in tyre production, as tyres are essential components of virtually all vehicles—from passenger cars to aircraft. The global tyre market recorded a growth rate of approximately 5.01% between 2011 and 2015 [1] and continues to expand at an estimated annual rate of 3.4% [2]. This increase is largely driven by rising population, improved living standards, and growing disposable income worldwide [1]. Consequently, the generation of scrap tyres, also known as end-of-life tyres (ELTs), has grown proportionally. Global tyre manufacturing output surpassed 19 million tons in 2019 and is projected to increase by 3–4% annually due to growing demand, design innovations, and capacity expansions [2,3].

The ever-increasing quantity of scrap tyres has created significant environmental challenges. In 2023 alone, global tyre sales reached 2.47 billion units [4], a large proportion of which are eventually decommissioned as ELTs. These tyres are bulky, non-biodegradable, and difficult to compress, making landfilling both space-inefficient and environmentally unsustainable. In Africa, Nigeria and South Africa are the major contributors to ELT

generation. South Africa discards over 11 million tyres annually [1], while Nigeria produces about 850,000 tons each year, with additional millions reported in other West African cities [5]. Inadequate collection and recycling infrastructure in developing countries further exacerbate the problem, resulting in open dumping and burning, which cause air and soil pollution. Various approaches have been explored for managing scrap tyres, including re-treading, incineration, material and energy recovery, and pyrolysis [6–9]. Among these, pyrolysis has emerged as a promising method for transforming ELTs into valuable products such as fuel oil, gas, and char. The process thermochemically decomposes organic material at elevated temperatures in an oxygen-free environment, offering both waste reduction and resource recovery benefits. Compared with incineration and landfilling, pyrolysis minimizes pollutant emissions and yields products that can serve as alternative energy sources [10–12].

Despite its advantages, large-scale implementation of scrap tyre pyrolysis remains limited in developing economies due to insufficient data on its economic and energy performance. Most previous studies have focused on laboratory or pilot-scale systems, with little emphasis on process simulation and techno-economic analysis under African conditions. To bridge this gap, the present study assesses the techno-economic feasibility and energy efficiency of scrap tyre pyrolysis in Nigeria. Two plant configurations are evaluated: a standalone pyrolysis plant and a pyrolysis plant integrated with power generation. The study aims to identify the most profitable and energy-efficient option, providing insight into the potential of scrap tyre valorization as a sustainable waste-to-energy pathway for developing regions.

2. Computational Methodology

The scrap tyre pyrolysis process was modelled using Aspen Plus V12 process simulator. The overall simulation workflow is illustrated in Figure 1, which outlines the key steps for achieving the study objectives. The process data used for the simulation were obtained from published literature sources.

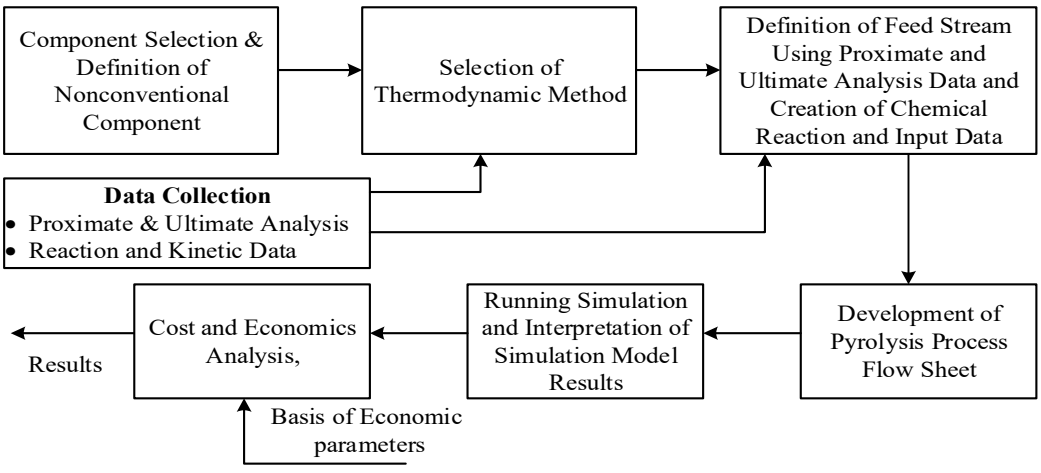

Figure 1. Schematic representation of the simulation procedure for the scrap tyre pyrolysis process. Note: Arrow direction indicates the work flow direction for the study.

The Non-Random Two Liquid (NRTL) model coupled with the Redlich–Kwong (RK) equation of state was used as the thermodynamic framework. The NRTL–RK model was selected because it effectively captures non-ideal liquid-phase behaviour through binary interaction parameters while adequately representing gas-phase properties via the RK equation [13]. The presence of polar compounds such as sulphur-, nitrogen-, and oxygen-containing species in tyre pyrolysis products further justifies the choice of this model, as it

provides accurate predictions for systems exhibiting vapour–liquid equilibria (VLE) and liquid–liquid equilibria (LLE) [14].

2.1. Process Simulation Data

Scrap tyres were defined as a nonconventional component in Aspen Plus using the proximate and ultimate analysis reported by Ref. [15], presented in Table 1. Due to the complex mixture of the liquid products, the pyrolysis oil was defined in Aspen Plus using its boiling point curve data, adopted from Ref. [16]. Sixteen pseudo-components were generated to represent the oil fractions within a boiling range of 75–548 °C.

Table 1. Proximate and ultimate analysis of scrap tyre (**Note**: H—hydrogen; N—nitrogen; S—sulphur; O—oxygen; A—ash; VM—volatile matter; FC—fixed carbon; M—moisture) [15].

Ultimate Analysis (wt.%)		**Proximate Analysis on as Received (wt.%)**	
C	83.62	A	10.73
H	8.10	VM	63.91
N	0.63	FC	24.25
S	1.84	M	1.11
O	5.81		
	100.00		100.00

The pyrolysis reactions were modelled using power-law kinetics (Arrhenius form), expressed as $r = k(T)^n exp\left(-\frac{E}{RT}\right)(driving\ force)$; adopted from Ref. [17] where r is the reaction rate, k is the pre-exponential factor, E is the activation energy, R is the universal gas constant, T is the absolute temperature, n is the interactive forces due to collision and the change in the orientation of molecules with temperature, which equals zero in the case of the Arrhenius equation, and driving force is the concentration/pressure change effect. The kinetic data used for the pyrolysis reactor, adopted from Ref. [18], are summarized in Table 2. The reactor was modelled as an RPlug unit in Aspen Plus.

Table 2. Kinetic data for tyre pyrolysis reactions [18].

Rxn No.	**Name**	**Reaction**	**k (1/s)**	**Ea (kJ/mol)**
1	R1	Tyre Rubber → Volatiles + Liquids	2.29×10^{20}	315.4
2	R2	Tyre Rubber → Char	4.87×10^{18}	237.05
3	R3	Char → Volatiles + Liquids	1.35×10^{16}	295.72
4	R4	Char ↔ Volatiles	1.35×10^{18}	290.72

2.2. Process Description

The process flow diagram (PFD) of the scrap tyre pyrolysis plant is shown in Figure 2. Whole tyres are first passed through a wire extractor (WE-100) to remove approximately 15 wt.% of steel [15]. The de-wired tyres are shredded in SH-100 into small chips, which are then fed into the pyrolyser (R-100) operating at 650 °C. The vapour products exit the reactor and enter a cyclone separator (CY-100) where entrained char particles are removed.

The vapour stream is condensed in EX-100 and subsequently separated in V-100 into gaseous and liquid fractions. The liquid product is pumped by P-100 into a distillation column (C-100), where it is separated into pyro-diesel and heavy oil fractions.

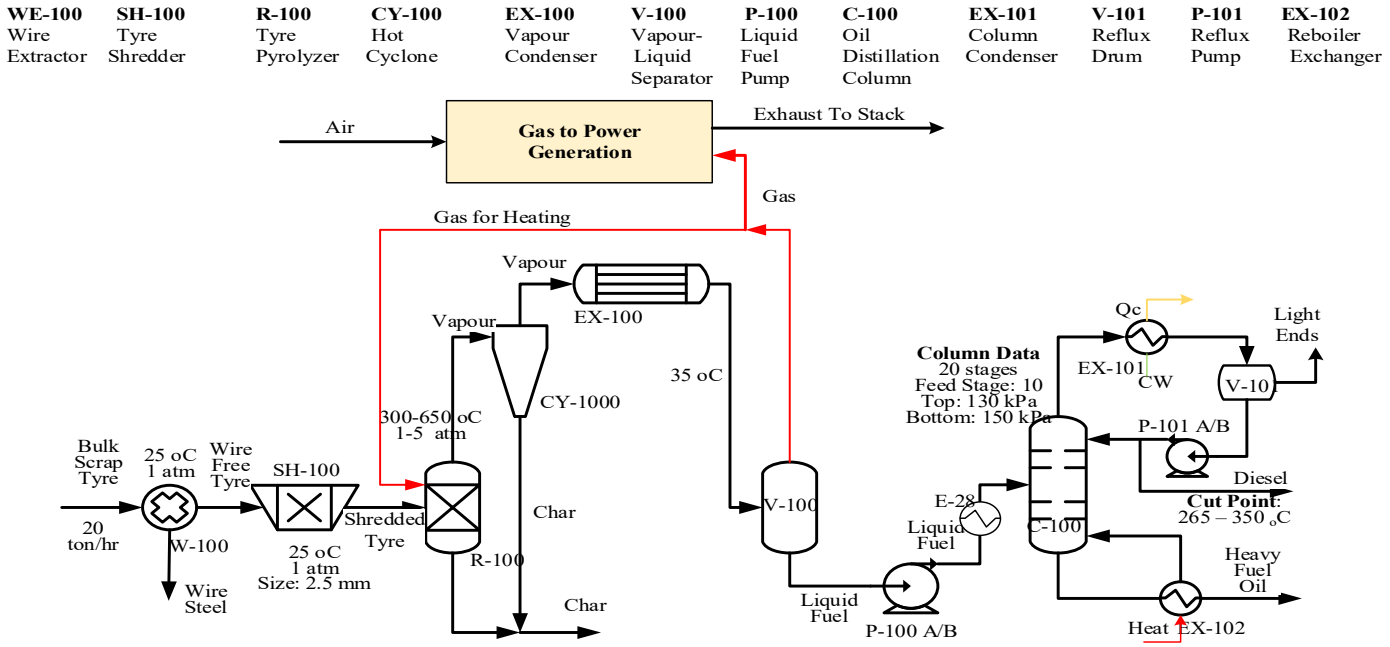

Figure 2. Process flow diagram of scrap tyre pyrolysis plant. Note: Yellow is the power plant, the red line indicates gas flow stream, the arrow show the material flow, and "oC" represented degree Celsius.

The gaseous product is channelled to a power generation unit comprising a combustion unit, air compressor, gas turbine, and heat recovery system. The energy efficiency (η_e) of the process was calculated as $Energy\ Efficiency = \frac{\sum(m_p \times HHV_p) + E_{gen}}{0.97((M_{tyre} \times HHV_{tyre}) + E_{demand})}$, where m_p = mass flow rate of specific product (kg/s); HHV_p = higher heating value of specific product (MJ/kg); M_{tyre} = mass flow rate of wire-free tyre (kg/s); HHV_{tyre} = higher heating value of tyre (MJ/kg); E_{demand} = electricity power demand of equipment (MW); E_{gen} = electricity power (if generated in MW). The HHVs of char, pyro-diesel, gas, heavy oil, and tyre used in the study are 11.40 MJ/kg, 43 MJ/kg, 8 MJ/kg, 16 MJ/kg, and 43 MJ/kg, respectively [19,20]. Table 3 summarizes the main unit operations and specifications used in the simulation.

Table 3. Aspen Plus unit operation blocks used in the pyrolysis process model.

Unit Operation	Aspen Plus Block	Comments/Specifications
C-100	RadFrac	Rigorous multi-stage distillation model with 20 theoretical stages; feed stage: 10; condenser pressure 1.2 bar; ASTM diesel cut: 330 °C; reflux ratio: 1
CY-100	Cyclone	Simplified solid separator simulation, 1.0133 bar
K-100	Compr	Isentropic model type with pressure ratio specification, pressure ratio: 2.5
R-100	Rplug (Pyrolizer)	Rigorous simulation with kinetics reactions; length: 2.5 m; diameter: 1.24 m (volume: 3 m^3); 650 °C; 5 bar
R-200	RStoic (Power Plant Combustion Unit)	Simplified simulation with combustion reaction generation
SH-100	Crusher	Simplified size reduction simulation with primary operating mode
T-100	Turbine	Isentropic model type with discharge pressure specification; model: turbine; discharge pressure: 1 bar
V-100	Sep	Simplified component separator simulation, 1.0133 bar
WE-100	RStoic	Simplified simulation with yield specification (15%wt. wire steel and 85%wt. wire-free scrap tyre)

2.3. Cost and Economic Analysis

Economic evaluation was performed using Aspen Process Economic Analyzer (APEA) for capital investment estimation, while Microsoft Excel was used to compute operating and production costs based on mass and energy balances from the Aspen Plus simulation. The economic indicators used to assess project viability include Payback Period (PBP), Internal Rate of Return (IRR), Return on Investment (ROI), Net Present Value (NPV), and Profitability Index (PI).

Two scenarios were considered: Scenario 1 models a pyrolysis plant with power generation (steel, char, and pyro-diesel production), while Scenario 2 is a standalone pyrolysis plant only. The economic assumptions used in the evaluation are presented in Table 4. The price of heavy oil was assumed to be 43.75% of pyro-diesel's unit price, reflecting its lower market value.

Table 4. Economic parameters and assumption.

Parameters	Value
Plant Capacity	20 tons/h (160,800 tons/y) scrap tyres
Operating life of plant	15 years
Operating days per year	335 days (8040 h)
Engineering, Procurement and Construction (EPC)	2 years (year 1: 50% and year 2: 50%)
Depreciation type	Straight line depreciation method
Depreciation period	10 years with 10% salvage value
Income tax rate	35%
Production volume in first year of operation	65%
Production volume in second year of operation	90%
Ramp up production to 100%	3rd year of operation
Discount rate	15%
Pyro-diesel unit price	USD 0.48/L [21]
Heavy oil unit price	USD 0.21/L (43.75% that of pyro-diesel)
Steel wire unit price	USD 0.21/kg (local market in Nigeria)
Char unit price	USD 0.11/kg (local market in Nigeria)
Scrap tyre unit price	USD 0.13/kg (local market in Nigeria)
Dollar to Naira exchange rate	N1500 per USD [22]

3. Results and Discussions

The process simulation model for scrap tyre pyrolysis was developed in Aspen Plus and consists of two configurations: (i) Scenario 1, an integrated pyrolysis and power generation plant; and (ii) Scenario 2, a standalone pyrolysis plant. Figure 3 illustrates the simulation flow diagrams for both configurations.

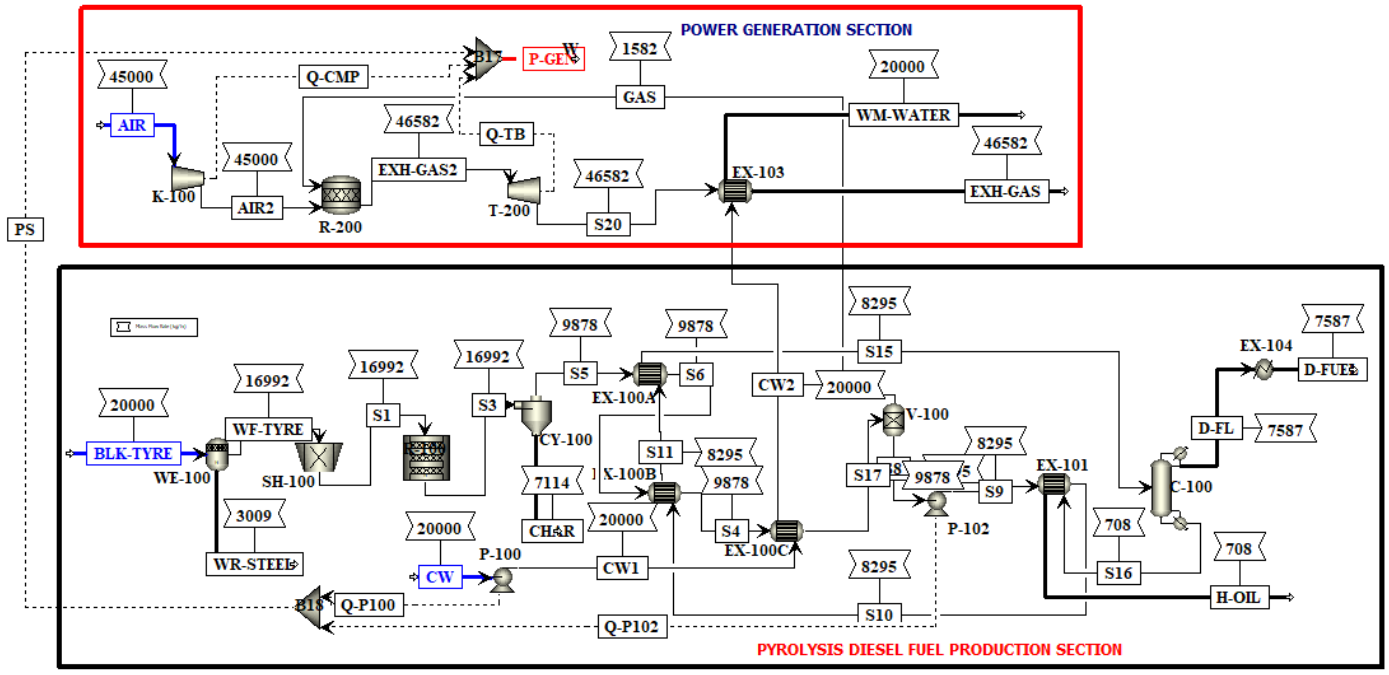

(**a**) **Scenario-1:** Pyrolysis and integrated power generation plant

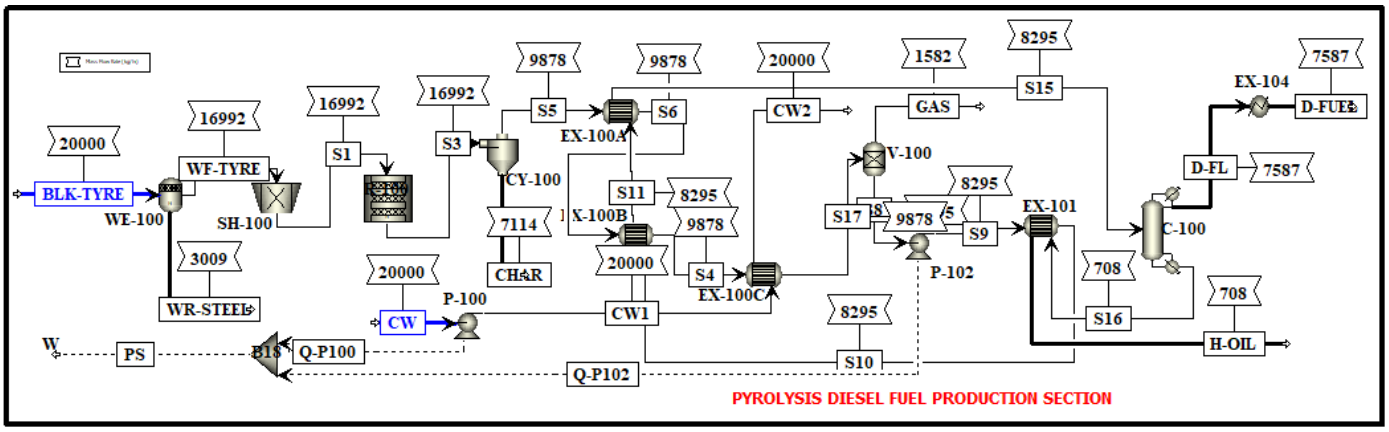

(**b**) **Scenario-2**: Pyrolysis plant

Figure 3. Tyre pyrolysis and co-power generation process simulation model.

3.1. Materials and Energy Balance

Table 5 summarizes the material balance for Scenario 1. For a feed rate of 20 tons·h^{-1} of scrap tyres, the product distribution was 15.04 wt.% steel wire, 35.57 wt.% char, 37.94 wt.% pyro-diesel, 7.91 wt.% gas, and 3.54 wt.% heavy oil. In terms of wire-free tyre input (16,991.5 kg·h^{-1}), the yields were 41.87% char, 44.65% pyro-diesel, 9.31% gas, and 4.17% heavy oil. These results agree with the literature reports for scrap tyre pyrolysis, which typically yield 39–43% liquid and 35–40% solid char fractions [23,24]. The power generation unit produced approximately 2.94 MW of electricity from the gaseous product.

For Scenario 2, which excluded power generation, the product yields were similar, confirming that power generation mainly affects the energy balance but not the pyrolysis product distribution. The energy requirements of the process units are summarized in Table 6. The electricity power demand was measured as 1.072 MW, while the electricity power produced was 4.012 MW. The net electrical output of 2.94 MW validates the efficiency of the integrated system.

Table 5. Summary of annual material input and output from the plant (**Note**: D-FUEL: produced diesel fuel; H-OIL: pyrolysis heavy oil; WR-STEEL: wire steel; EXG-GAS: exhaust gas; WM-WATER: hot water).

Feed Materials			**Output Material**		
	kg/h	ton/year		kg/h	ton/year
AIR	45,000	361,800	CHAR	7113.89	57,195.67
WC (Water)	20,000	160,800	D-FUEL	7587.48	61,003.31
BLK-TYRE (Bulk Tyre)	20,000	160,800	H-OIL	707.73	5690.16
			EXH-GAS	46,582.4	374,522.5
			WM-WATER	20,000	160,800
			WR-STEEL	3008.5	24,188.34
Total		683,400			683,400

Table 6. Summary of energy requirements across the plant.

Unit	**Description**	**Demand (MW)**	**Produced (MW)**
K-100	Combustion Air Compressor	1.055	-
P-100	Cooling Water Pump	0.016	-
P-102	Pyrolysis Liquid Pump	0.0007	-
T-200	Gas Turbine	-	4.012
R-200	Combustion Chamber	-	-
EX-103	Flue Gas–Water Exchanger	-	-
WE-100	Wire Extractor	0.000	-
SH-100	Tyre Shredder	0.000	-
R-100	Tyre Pyrolyser	-	-
CY-100	Gas–Solid Hot Cyclone	0.000	-
EX-100A	Pyrolysis Vapour Condenser	-	-
EX-100B	Pyrolysis Vapour–Water Exchanger	-	-
EX-100C	Pyrolysis Vapour–Water Exchanger	-	-
V-100	Vapour–Liquid Separator	-	-
EX-101	Pyrolysis Liquid–Column Bottom Exchanger	-	-
EX-104	Diesel Product Cooler	-	-
C-100 Reb.	Column Reboiler	-	-
C-100 Cond.	Column Condenser	-	-
Total		1.072	4.012

The overall energy efficiency was 51.23% for Scenario 1 and 94.44% for Scenario 2. The lower efficiency of Scenario 1 is attributed to conversion losses in the single-cycle power unit, which was evident in the low power obtained from the power plant with high fuel consumption in the equipment. These results are consistent with the 70–90% efficiency range reported for similar waste-to-energy processes [25–27].

3.2. Capital and Production Cost Estimation

The total capital investment for each configuration is shown in Table 7. Scenario 1 required a total capital cost of USD 27.63 million, compared to USD 23.50 million for Scenario 2. The additional cost in Scenario 1 arises from the inclusion of power generation equipment (turbine, combustion chamber, and compressors). However, there was little significant difference in the running cost of the two scenarios compared to the capital cost.

Table 7. Capital investment cost of the different scenario.

Items	Scenario 1 [USD]	Scenario 2 [USD]
Purchased Equipment	8,780,600	5,051,200
Equipment Setting	434,500	424,300
Piping	1,797,900	1,775,000
Civil	383,300	380,500
Steel	396,700	375,500
Instrumentation	1,959,800	1,935,500
Electrical	656,600	656,600
Insulation	419,000	409,000
Paint	323,500	305,000
Utilities and Service Facilities	3,889,400	3,889,400
Land and Site Preparation	1,920,400	1,915,400
Other	1,111,200	1,111,200
G and A Overheads	399,000	399,000
Contract Fee	596,000	596,000
Contingencies	1,776,100	1,776,100
Total Fixed Cost	24,844,000	20,999,700
Working Capital	2,782,530	2,498,960
Total Capital Cost	27,626,500	23,498,700

Operating and production costs are presented in Table 8. The raw material cost accounted for 75.38% and 77.88% of the total production costs for Scenarios 1 and 2, respectively, in agreement with the literature values of 70–95% for raw material contribution [28]. Utilities represented the largest portion of operating expenses (≈65%), mainly due to the high energy demands for pyrolysis and condensation. Table 8 illustrates the breakdown of operating cost components.

Table 8. Estimated production cost.

Scenario	Scenario 1 [$]	Scenario 2 [$]
Utilities Cost	4,392,180	3,865,120
Operating Labour Cost	906,570	797,790
Maintenance Cost	354,790	298,030
Operating Charges	268,570	241,710
Plant Overhead	517,160	424,070
General and Administrative Cost	389,550	311,640
Total Operating Cost	6,828,820	5,938,360
Raw Material Cost	20,904,000	20,904,000
Total Production Cost	27,732,820	26,842,360

3.3. Profitability Analysis

The profitability indices for both scenarios are presented in Table 9. Scenario 1 exhibited a higher Net Present Value (NPV) of USD 28.65 million and Internal Rate of Return (IRR) of 34.48%, compared to USD 23.72 million and 34.04% for Scenario 2.

Both configurations are economically feasible, with payback periods (PBP) below 5 years and profitability indices (PI) above 2.0. These values are comparable to reported IRRs (15–35%) for pyrolysis-based fuel production [29,30]. The higher profitability of Scenario 1 reflects the added revenue from electricity generation.

Table 9. Profitability indicators for the biorefineries.

Profitability Indicators	Scenario 1	Scenario 2
NPV	USD 28,649,378	USD 23,724,168
IRR	34.48%	34.04%
ROI	34.99%	34.37%
PBP [y]	4.41	4.38
PI	2.04	2.01
Selling Price of Pyro-Diesel [USD/L]	0.4667	0.4667
Selling Price of Electricity [USD/kWh]	0.1300	–

3.4. Minimum Selling Price (MSP)

The minimum selling price (MSP) analysis, conducted at zero NPV and a 15% discount rate, is summarized in Table 10. Scenario 1 achieved a lower pyro-diesel MSP of USD 0.3214/L, compared to USD 0.3358/L for Scenario 2. The MSPs are well below current market diesel prices (USD 0.7–0.85/L) in Nigeria [31], indicating strong economic competitiveness.

Table 10. Estimated MSP of the scenario products.

Profitability Indicators	Scenario 1	Scenario 2
NPV	$0.00	$0.00
IRR	15.0%	15%
ROI	11.24%	11.24%
PBP [y]	4.28	4.28
PI	1.00	1.00
MSP of Pyro-Diesel [USD/L]	0.3214	0.3358
MSP of Electricity [USD/kWh]	0.10	–
MSP of Heavy Oil [USD/kg]	0.12	0.12
MSP of Steel wire [USD/kg]	0.21	0.21
MSP of Char [USD/kg]	0.10	0.10

3.5. Sensitivity Analysis

A sensitivity analysis in Figure 4 was conducted with ±30% variation in key parameters, including capital cost, scrap tyre cost, and product prices. Figure 4 shows that the pyro-diesel selling price and scrap tyre feed cost are the most influential variables affecting IRR and NPV. Increasing pyro-diesel price from USD 0.327 to 0.607/L raised IRR to close to 50%, while an increase in scrap tyre price reduced profitability by over 10%. The selling price of electricity had a comparatively minor influence.

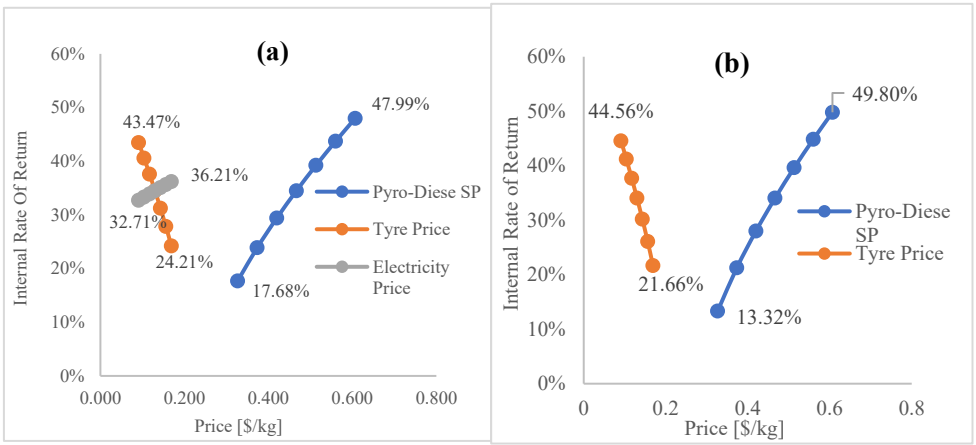

Figure 4. Sensitivity of IRR to tyre price and products price: (**a**) scenario 1; (**b**) scenario 2.

Overall, profitability is driven primarily by pyro-diesel pricing and raw material cost, implying that improved market pricing and feedstock sourcing strategies can significantly enhance the viability of scrap tyre pyrolysis plants.

4. Conclusions

This study evaluated the techno-economic feasibility and energy efficiency of scrap tyre valorization through pyrolysis in Nigeria under two configurations: a standalone pyrolysis plant and a pyrolysis plant integrated with power generation. Both systems proved to be economically viable and environmentally sustainable alternatives to conventional disposal methods such as landfilling and open burning.

Although the integrated system (Scenario 1) required higher capital and operating costs due to the additional equipment required for power generation, it achieved superior profitability, with a higher Net Present Value (USD 28.65 million) and Internal Rate of Return (34.48%). The standalone pyrolysis plant (Scenario 2) exhibited a slightly higher overall energy efficiency (94.44%) compared to the integrated configuration (51.23%), attributable to the conversion losses in the single-cycle power system. Sensitivity analysis revealed that the pyro-diesel selling price and scrap tyre feed cost are the most influential factors affecting profitability, while the electricity selling price exerts a relatively minor effect. Both configurations achieved payback periods of less than five years and competitive minimum selling prices for pyro-diesel, confirming their strong economic prospects.

In summary, while both systems offer promising routes for sustainable scrap tyre management, the integrated pyrolysis–power generation configuration is the most economically attractive option due to its added electricity revenue. These findings demonstrate the potential of pyrolysis to transform end-of-life tyres into valuable energy resources, contributing to cleaner production and circular economy goals in Nigeria.

Author Contributions: Conceptualization, O.A.A. and T.O.; methodology, O.A.A. and T.O.; software, D.I.O.; validation, U.M.M., D.I.O. and O.A.A.; formal analysis, D.I.O.; investigation, D.I.O. and T.O.; resources, D.I.O.; data curation, U.M.M. and D.I.O.; writing—original draft preparation, U.M.M., D.I.O. and T.O.; writing—review and editing, U.M.M., T.O. and O.A.A.; visualization, U.M.M., D.I.O., and T.O.; supervision, T.O. and O.A.A.; project administration, T.O. and O.A.A.; funding acquisition, D.I.O. All authors have read and agreed to the published version of the manuscript.

Funding: This research received no external funding.

Institutional Review Board Statement: Not applicable.

Informed Consent Statement: Not applicable.

Data Availability Statement: All data employed in the study are provided there in the manuscript.

Acknowledgments: The authors wish to acknowledge to the constructive inputs of Abdulsobur Olatunde for during the proofreading and revision of the manuscript.

Conflicts of Interest: The authors declare no conflicts of interest.

References

1. Mmereki, D.; Machola, B.; Mokokwe, K. Status of waste tires and management practice in Botswana. *J. Air Waste Manag. Assoc.* **2019**, *69*, 1230–1246. [CrossRef] [PubMed]
2. Grand View Research. Tyres Market Size, Share and Trends Analysis Report, 2025–2030. 2025. Available online: https://www.grandviewresearch.com/industry-analysis/tyres-market-report#: :text=The%20global%20tyres%20market%20size,3.4%25%20from%202025%20to%202030 (accessed on 19 May 2025).
3. Smithers. The Future of OTR Tires to 2027. Available online: https://www.smithers.com/services/market-reports/web-archive-tires/the-future-of-tire-manufacturing-to-2024 (accessed on 3 March 2025).

4. Smithers. Infographic: Overview of the Global Tyres Market. 2025. Available online: https://www.smithers.com/resources/2025/september/infographic-market-outlook-for-global-tires (accessed on 17 June 2025).
5. Sakshi, K.S. Freetown Waste Management Recycle: Transforming Waste Tyres into Rubber Tiles Since Its Conception in 2020. 2021. Available online: https://www.theglobaleconomics.com/2021/11/08/freetown-waste-management/amp/ (accessed on 14 March 2022).
6. Pilusa, J.; Shukla, M.; Muzenda, E. Economic Assessment of Waste Tyres Pyrolysis Technology: A Case study for Gauteng Province, South Africa. *Int. J. Res. Chem. Metall. Civ. Eng.* **2014**, *1*, 41–49.
7. Mulaudzi, L. Process Modelling and Economic Evaluation of Waste Tyres to Limonene via Pyrolysis. Master's Thesis, Chemical Engineering, Stellenbosch University, Stellenbosch, South Africa, 2017; pp. 1–144. Available online: https://scholar.sun.ac.za (accessed on 13 March 2022).
8. Valentini, F.; Pegoretti, A. End-of-life options of tyres. A review. *Adv. Ind. Eng. Polym. Res.* **2022**, *5*, 203–213. [CrossRef]
9. Zerin, N.H.; Rasul, M.G.; Jahirul, M.I.; Sayem, A.S.M. End-of-life tyre conversion to energy: A review on pyrolysis and activated carbon production processes and their challenges. *Sci. Total Environ.* **2023**, *905*, 166981. [CrossRef] [PubMed]
10. Wądrzyk, M.; Janus, R.; Rządzik, B.; Lewandowski, M.; Budzyń, S. Pyrolysis Oil from Scrap Tyres as a Source of Fuel Components: Manufacturing, Fractionation, and Characterization. *Energy Fuels* **2020**, *34*, 5917–5928. [CrossRef]
11. Han, B.; Kumar, D.; Pei, Y.; Norton, M.; Adams, S.D.; Khoo, S.Y.; Kouzani, A.Z. Sustainable transformation of end-of-life tyres into value-added products using thermochemical processes. *Carbon Res.* **2024**, *3*, 73. [CrossRef]
12. Hu, Y.; Zhou, J.; Qian, Q.; Ren, J. Innovative valorization of waste tire by integrating pyrolysis with Steam Rankine Cycle, multi-generation, and desalination: Novel process design, simulation and comprehensive analysis. *Energy* **2025**, *323*, 135812. [CrossRef]
13. Chaves, I.D.G.; López, J.R.G.; Zapata, J.L.G.; Robayo, A.L.; Niño, G.R. Thermodynamic and Property Models. In *Process Analysis and Simulation in Chemical Engineering*; Chaves, I.D.G., López, J.R.G., Zapata, J.L.G., Robayo, A.L., Niño, G.R., Eds.; Springer International Publishing: Cham, Switzerland, 2016; pp. 53–102. [CrossRef]
14. Sandler, S.I. *Using Aspen Plus in Thermodynamics Instruction: A Step-by-Step Guide*; John Wiley & Sons, Inc.: Hoboken, NJ, USA, 2015; pp. 1–300.
15. Yenealem, A. Modelling, Simulation and Experimental Study of Continuous Waste Tire Pyrolysis Plant. Master's Thesis, Mechanical Engineering, Addis Ababa Institute of Technology, Addis Ababa, Ethiopia, 2019; pp. 1–64.
16. Islam, M.R.; Joardder, M.; Kader, M.A.; Islam Sarker, M.R.; Haniu, H. Valorization of solid tyre wastes available in Bangladesh by thermal treatment. In *Proceedings of the WasteSafe 2011—2nd International Conference on Solid Waste Management in the Developing Countries*; Bari, Q.H., Islam, S.M.T., Rafzul, I.M., Sarkar, G., Alamgir, M., Howlader, M.K., Eds.; WasteSafe/Khulna University of Engineering & Technology (KUET): Khulna, Bangladesh, 2011; pp. 1–9. Available online: https://eprints.qut.edu.au/53484/ (accessed on 20 July 2025).
17. De, S.; Thokchom, A.K.; Kumar, R. Development of an Aspen Plus model for catalytic transesterification with different reactor arrangements and kinetic mechanisms. *RSC Adv.* **2025**, *15*, 49197–49209. [CrossRef] [PubMed]
18. Wang, C.; Zhao, B.; Tian, X.; Wang, K.; Tian, Z.; Han, W.; Bian, H. Study on the Pyrolysis Kinetics and Mechanisms of the Tread Compounds of Silica-Filled Discarded Car Tires. *Polymers* **2020**, *12*, 810. [CrossRef] [PubMed]
19. Miandad, R.; Rehan, M.; Barakat, M.A.; Aburiazaiza, A.S.; Khan, H.; Ismail, I.M.I.; Dhavamani, J.; Gardy, J.; Hassanpour, A.; Nizami, A.-S. Catalytic pyrolysis of plastic waste: Moving toward pyrolysis based biorefineries. *Front. Energy Res.* **2019**, *7*, 27. [CrossRef]
20. Ślefarski, R.; Jójka, J.; Czyżewski, P.; Gołębiewski, M.; Jankowski, R.; Markowski, J.; Magdziarz, A. Experimental and Numerical-Driven Prediction of Automotive Shredder Residue Pyrolysis Pathways toward Gaseous Products. *Energies* **2021**, *14*, 1779. [CrossRef]
21. IMARC Group. Pyrolysis Oil Price Trend, Index and Chart 2025. 2025. Available online: https://www.imarcgroup.com/pyrolysis-oil-price-trend (accessed on 28 June 2025).
22. Aboki Forex. CBN Dollar Rate in Naira Today—Aboki Forex: Central Bank of Nigeria Rates. 2025. Available online: https://abokiforex.app/cbn (accessed on 30 June 2025).
23. Cen, K.; Zhang, J.; Ma, Z.; Chen, D.; Zhou, J.; Ma, H. Investigation of the relevance between biomass pyrolysis polygeneration and washing pretreatment under different severities: Water, dilute acid solution and aqueous phase bio-oil. *Bioresour. Technol.* **2019**, *278*, 26–33. [CrossRef] [PubMed]
24. Khan, S.R.; Zeeshan, M.; Khokhar, M.F. A comprehensive study on upgradation of pyrolysis products through co-feeding of waste tire into rice straw under broad range of co-feed ratios in a bench-scale fixed bed reactor. *Biomass Convers. Biorefinery* **2023**, *13*, 4751–4765. [CrossRef]
25. Singh, J. A review paper on pyrolysis process of waste tyre. *Int. J. Appl. Res.* **2017**, *1*, 258–262.

26. Muzenda, E. A comparative review of waste tyre pyrolysis, gasification and liquefaction (PGL) processes. In Proceedings of the International Conference on Chemical Engineering and Advanced Computational Technologies (ICCEACT), Pretoria, South Africa, 24–25 November 2014. Available online: https://core.ac.uk/outputs/43602663/?utm_source=pdf&utm_medium=banner&utm_campaign=pdf-decoration-v1/ (accessed on 5 September 2025).
27. Gamboa, A.A.R.; dos Santos, L.R.; Martins, C.A.; Rocha, A.M.A.; Alvarado-Silva, C.A.; de Carvalho, J.A., Jr. Thermodynamic Evaluation of the Energy Self-Sufficiency of the Tyre Pyrolysis Process. *Energies* **2023**, *16*, 7932. [CrossRef]
28. Banković-Ilić, I.B.; Stojković, I.J.; Stamenković, O.S.; Veljkovic, V.B.; Hung, Y.-T. Waste animal fats as feedstocks for biodiesel production. *Renew. Sustain. Energy Rev.* **2014**, *32*, 238–254. [CrossRef]
29. Kibria, M.A.; Thomas, B.S.; Bhattacharya, M.; Bhattacharya, S. Processing of metal-free end-of-life tyres (EOLTs) to fuels and products: An experimental study with process simulation and economic analysis from an Australian perspective. *Clean Technol. Environ. Policy* **2024**, *26*, 4215–4229. [CrossRef]
30. Fajimi, L.I.; Oboirien, B.O. A techno-economic study on the co-production of syngas and activated carbon from waste tyre gasification process. *J. Mater. Cycles Waste Manag.* **2023**, *25*, 3462–3475. [CrossRef]
31. Salisu, S.; Mustafa, M.W.; Olatomiwa, L.; Mohammed, O.O. Assessment of technical and economic feasibility for a hybrid PV-wind-diesel-battery energy system in a remote community of north central Nigeria. *Alex. Eng. J.* **2019**, *58*, 1103–1118. [CrossRef]

Disclaimer/Publisher's Note: The statements, opinions and data contained in all publications are solely those of the individual author(s) and contributor(s) and not of MDPI and/or the editor(s). MDPI and/or the editor(s) disclaim responsibility for any injury to people or property resulting from any ideas, methods, instructions or products referred to in the content.