engineering proceedings

MDPI

Proceeding Paper

Strength Analysis of Wood Frame Structures Based on SNI 7973:2013 and Load Modeling on SAP 2000 Application Technology: The Kasepuhan Sinar Resmi Traditional House †

Sofa Lailatul Ma'rifah [1], Paikun [1,*], Nadhya Susilo Nugroho [1], Siti Maemunah [2] and Muhammad Deva Prayoga [1]

[1] Department of Civil Engineering, Faculty Engineering, Computer and Design, Nusa Putra University, Sukabumi 43152, Indonesia; sofa.lailatul_ts19@nusaputra.ac.id (S.L.M.); nadhyasn20@gmail.com (N.S.N.); muhammad.deva_ts19@nusaputra.ac.id (M.D.P.)

[2] Postgraduate Program in Transportation Management, Faculty of Business Management, Trisakti Institute of Transportation and Logistics, Jakarta 13410, Indonesia; unacsy2015@gmail.com

* Correspondence: paikun@nusaputra.ac.id

† Presented at the 7th International Global Conference Series on ICT Integration in Technical Education & Smart Society, Aizuwakamatsu City, Japan, 20–26 January 2025.

Abstract

The uniqueness of traditional houses in Kasepuhan Sinar Resmi lies in the use of natural materials. However, over time, this uniqueness has become increasingly rare. The contributing factors include a lack of public awareness about the importance of preserving traditional house culture, the absence of standardized designs, uncertainty regarding the quantity of required building materials, and difficulties in sourcing materials. If left unaddressed, these issues could lead to the loss of the uniqueness of traditional houses. This study employs observation methods to produce designs that align with ancestral traditions, interviews to gather detailed information, and structural analysis based on SNI 7973:2013 standards using the SAP2000 application. These approaches aim to determine effective and safe wooden material dimensions in accordance with Indonesian standards. The primary goal of this research is to produce a traditional house design that meets both cultural and national standards, serving as a guideline for the Kasepuhan Sinar Resmi community in building traditional houses. Additionally, the findings are expected to serve as a reference for policymakers in providing resources for building materials, supporting the preservation of these unique traditional houses.

Keywords: wooden truss; SAP2000; SNI 7973:2013; structural analysis; traditional architecture; cultural heritage

check for updates

Academic Editors: Debopriyo Roy, George F. Fragulis and Peter Ilic

Published: 17 September 2025

Citation: Ma'rifah, S.L.; Paikun; Nugroho, N.S.; Maemunah, S.; Prayoga, M.D. Strength Analysis of Wood Frame Structures Based on SNI 7973:2013 and Load Modeling on SAP 2000 Application Technology: The Kasepuhan Sinar Resmi Traditional House. *Eng. Proc.* **2025**, *107*, 90. https://doi.org/10.3390/engproc2025107090

Copyright: © 2025 by the authors. Licensee MDPI, Basel, Switzerland. This article is an open access article distributed under the terms and conditions of the Creative Commons Attribution (CC BY) license (https://creativecommons.org/licenses/by/4.0/).

1. Introduction

Indonesia has various ethnic and cultural groups spread throughout the archipelago, giving rise to diverse physical environmental conditions [1]. Differences in temperature, geology, climate, environmental morphology, and hydrology can influence the physical environmental conditions of an area [2,3]. Apart from these differences, the condition of the community's environment regarding beliefs, religion, history, and ancestry creates differences in culture and lifestyle in a region. One aspect of culture that characterizes an area can be observed from the buildings in that environment [4]. Buildings that are characteristic of an area are unique [5] and reflect the conditions of the people living in that area [6]. The level of development of human life can be marked by physical buildings, so buildings are needed that have intrinsic value regarding local wisdom [7].

Kasepuhan Sinar Resmi, which is located in the Gunung Halimun National Park area, precisely in Sinar Resmi Village, Cisolok District, Sukabumi Regency, West Java Province, is one of the areas with customs that have been preserved to this day. The cultural values found in Kasepuhan Sinar Resmi can be seen from the building's philosophy, outlook on life, livelihood, religious attitudes, and social activities, which have been passed down from generation to generation. The building layout pattern in Kasepuhan Sinar Resmi is based on the contour of the land, so it seems irregular. However, when viewed from the maxo and meso spatial layout, the traditional leader's house (bumi ageung) is placed on the north–south axis. This is believed to be a form of respect for Dewi Sri (Goddess of Rice). The people of Kasepuhan Sinar Resmi believe that the south is the abode of Dewi Sri, so it is believed that she can provide food fertility for the people of Kasepuhan. The following is the traditional house of the Kasepuhan Sinar Resmi traditional leader in Figure 1.



Figure 1. Traditional house of leaders.

Residents' houses in Kasepuhan Sinar Resmi have their own uniqueness, which shows the community's identity [8]. A house is a basic need that functions as a place to live and provides shelter [9,10] from the weather, wild animals, etc., which is deliberately constructed and consists of several rooms, such as a bedroom, family room, bathroom, etc. The Kasepuhan Sinar Resmi traditional house building has architectural value and is rich in meaning and local wisdom. This can be seen from the shape of the building, which consists of a foundation and a stilted house structure [11]. The stilts serve the function of maintaining the balance of the building on the ground plate so that it is able to flexibly absorb shocks from an earthquake. Apart from that, the reason people use umpak foundations is because the building materials are made of wood, which is expected to offer protection against termites. Spatial planning that has a philosophy is a consideration when constructing a building. In addition, building materials come from nature, such as structures using wooden beams, walls using woven/bamboo panels, and palm fiber, which are characteristic of traditional houses in Kasepuhan Sinar Resmi. The traditional buildings in Kasepuhan Sinar Resmi represent Indonesian cultural heritage, originating from the past and requiring preservation for future generations [12].

The culture of Kasepuhan Sinar Resmi is one of the cultural aspects assessed by UNESCO Global Geopark. This assessment cannot be separated from the concept of traditional buildings which have a unique and beautiful feel. The Kasepuhan Sinar Resmi traditional house building as a natural heritage has its own value and meaning as a form of respect for the ancestors. This is an attraction for tourists to visit the Kasepuhan Sinar

Resmi Village. Even though ancestral culture is still preserved, traditional leaders and the community do not close themselves off from developments over time, so that people's mindsets will continue to develop. However, the increasingly modern era has caused a shift in ancestral cultural values, thereby threatening the preservation of traditional house culture as a legacy for future generations [13,14]. The narrowing scope of cultural values can be seen in physical buildings that deviate from ancestral values. This can be seen from community buildings which are starting to switch to using manufactured materials. The public considers that manufactured materials are more effective and efficient, in terms of cost, safety, and durability. The building is as shown in Figures 2 and 3.



Figure 2. Rooftop view of traditional houses in Kasepuhan Sinar Resmi.



Figure 3. The view of a traditional Kasepuhan Sinar Resmi building.

From this picture, it can be seen that the roofs of many people's houses use asbestos material. Apart from that, materials such as hebel, sand, and cement are widely used. However, there are several rules that must not be violated; for example, in the kitchen area, you are required to use wooden beams and bamboo woven floors. Meanwhile, the padaringan area (rice storage area) must face north or south as a form of respect for the ancestors. Apart from that, the padaringan must not face the bathroom and must use materials in accordance with predetermined rules, such as the use of wooden materials, woven bamboo floors, and roof coverings using thatch/fiber.

The shift in cultural values that occurred in Kasepuhan Sinar Resmi needs to be given special attention so that its cultural values, which are full of value and meaning, are maintained [12]. This effort can be carried out with good cooperation from traditional

leaders and the community. The lack of public knowledge about the importance of culture and the lack of standard design for traditional house buildings in Kasepuhan Sinar Resmi are among the many factors threatening traditional culture. Therefore, this research is very important for producing standards for Kasepuhan Sinar Resmi traditional buildings so that they can preserve a culture that has been recognized and assessed by UNESCO Global Geopark [15].

The differences between this study and previous research lie in the focus on architectural analysis, which reflects the cultural philosophy of Kasepuhan Sinar Resmi, and the type of wood used in the analysis, specifically local wood such as manglid. Meanwhile, the similarity is the use of wood as the main structural material, chosen for its flexibility and durability in adapting to environmental conditions, in accordance with tradition and this research refers to the SNI 7973:2013 standard [16].

2. Methodology

2.1. Description of Research Methods

Based on the description previously provided, this research employed a combination of methods, namely quantitative and qualitative [17]. Quantitative methods are technical methods for collecting data in the form of a series of numbers as well as ways to obtain knowledge or solve problems systematically. Quantitative methods are used to detect the amount of material needed in 1 building unit. Qualitative research is an inquiry strategy that emphasizes the search for meaning, understanding, concepts, characteristics, symptoms, symbols, and descriptions of a phenomenon, which is focused and multimethod, is natural and holistic, prioritizes quality, uses several methods, and is presented narratively. Qualitative methods were used to analyze the structural strength of the Kasepuhan Sinar Resmi traditional residential building.

2.2. Stages of Research Methods

The stages of the research method are used so that each activity can be organized so that it becomes effective and efficient. In general, this research stage is divided into several activities, including literature study, observation and interviews, data collection, data processing, and conclusions.

Each activity is carried out systematically. The stages in this research are as follows:

2.2.1. Literature Study

Literature study is carried out by searching for and reading several references from journals, books, news, the internet, etc., related to the research as a step to define the main problems in research, avoid plagiarism, and develop a framework of thinking from previous research. In this research, the main problem that is the research topic is the existing floor plan from which building material requirements will be calculated.

2.2.2. Observation

Observation is a data collection technique based on real conditions in the field [18], so this technique is more specific when compared to other techniques. In this research, direct observations were made at Kasepuhan Sinar Resmi to find out the actual conditions. Observations are carried out on various objects in general, whether on people, buildings, or the surrounding environment. In this observation, observations were made and recorded the condition of residents' houses along with the number of family members, room layout, room dimensions, building structure, building materials, architectural value of the building, and building material requirements that were permitted based on the Kasepuhan Sinar Resmi customary provisions.

2.2.3. Interview

Interviews were conducted with the leader or the community at random with the aim of finding out the material requirements permitted to build a traditional house in Kasepuhan Sinar Resmi, the difficulties in building a traditional house, and the sources of building materials.

2.2.4. Existing Images

This depiction stage applies the results of observations and interviews obtained based on data in the field [19]. This existing drawing consists of floor plans, foundation plans, column plans, beam plans, and roof structures. This image will be used as a basis for carrying out structural analysis and identifying material requirements.

2.2.5. Structural Analysis

Structural analysis is carried out after the building design process is complete. Each type of wood has different wood qualities and dimensions, so the level of strength will vary. This structural analysis process was carried out with the aim of identifying the structural strength of commonly used manglid wood. In this study, structural analysis was used referring to PKKI 1961 standard [20] dan SNI 7973:2013 standard [16]. In this analysis process, modeling was carried out using SAP 2000 v21 to facilitate structural modeling. Based on the description above, the research stages can be depicted in Figure 4:

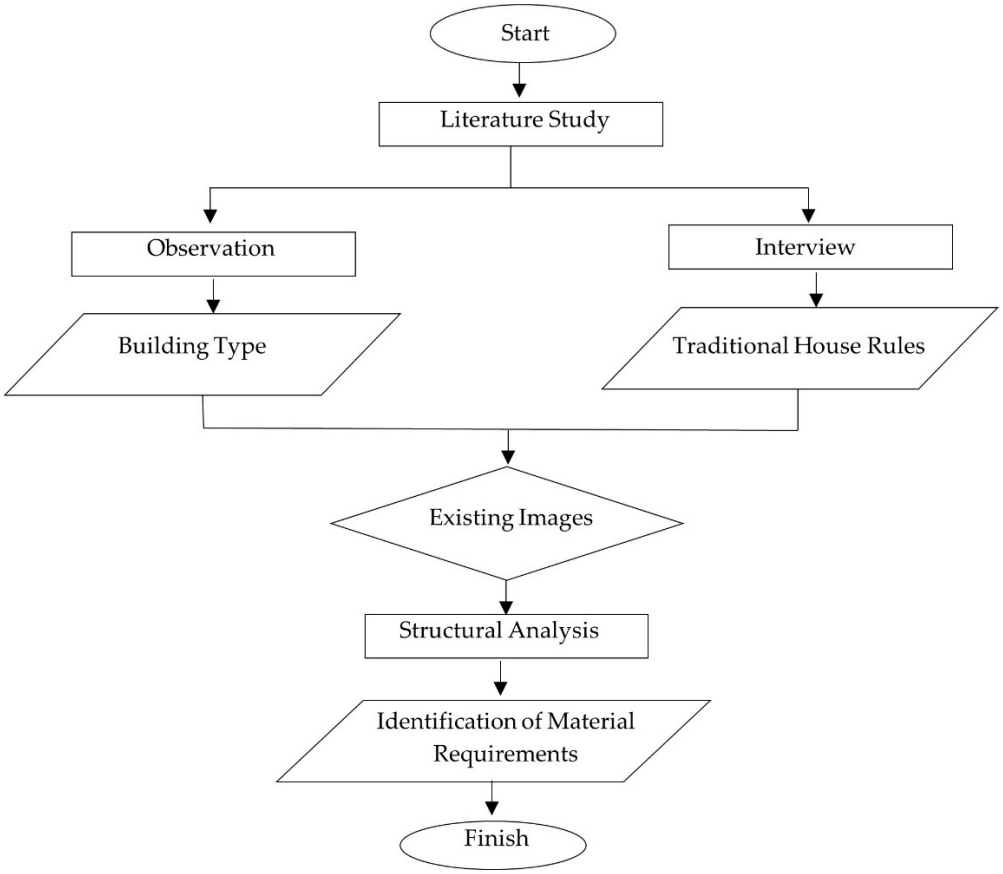

Figure 4. Research stage.

3. Result and Discussion

3.1. The Traditional House Construction Rules of Kasepuhan Sinar Resmi

The Kasepuhan Sinar Resmi traditional house is a traditional house that contains the meaning and philosophy of the ancestors. In the process of building a traditional Kasepuhan Sinar Resmi, there are various rules that must be followed. In general, the Kasepuhan Sinar Resmi traditional house has similarities with other traditional houses. The shape is a stage, and the materials come from nature, such as trees, palm fiber, talupuh, and others taken from the forest. The philosophy contained in the Kasepuhan building includes several aspects. The shape of an equilateral triangular roof shows the importance of maintaining good attitudes, speech, and behavior and respecting applicable rules. The round shape on the roof symbolizes the determination that wherever we live, we will return to Him. The angles on the pillar function as reinforcement for the pillar, which symbolizes strength in living life. The house in the shape of a stilt symbolizes that humans are the "middle ambu" (middle world) who are between the "upper ambu" and the "lower ambu", so they must have a balance between the upper and lower worlds.

Some of the rules that people must follow when building a house include those at the planning stage. For example, the padaringan (rice storage area) must face north or south, and the direction of the door opening must not face directly towards the bathroom. The materials for padaringan must come from nature; for example, bamboo booths and roof coverings must use palm fiber/thatch. Apart from that, the direction of the house door must also be determined carefully. The community must first ask permission from the Abah (traditional leader), who will then provide directions for opening the door and construction time based on the day and date of birth of the owner. For example, for those born on Friday, the main door must face north, while for those born on Thursday, the main door must face south. Apart from the rules for building a house, there are also rules that must be followed in everyday life. For example, when planting rice, people are not allowed to harvest more than once a year, because the earth as a mother can only "conceive" once a year. After harvesting, the earth must be given time to rest so that it remains fertile. In drying rice, there is a special technique where the rice is dried on the floor for several days until dry. Once dry, the rice will be pounded and put into the padaringan, which only women may enter as a form of respect for the Goddess of Rice.

In the use of wood materials, manglid, jengjeng, suren, and kisereuh wood types are generally used. Rasamala wood should not be used because apart from being easily broken, the name Rasamala contains the word "mala" which means misfortune, so it is believed to bring bad luck. Apart from that, fallen wood should not be used because it can reduce the strength of the wood. In selecting wood, it must also be ensured that one tree is not used for more than one house. Although there are no formal sanctions for violators of customary rules, violations often result in sudden illness. However, if the offender admits his mistake and apologizes, the pain will heal. Even though it may sound illogical, that is the law that applies in Kasepuhan Sinar Resmi as a form of deterrence.

Based on the research conducted by Elia Hunggurami, Sudiyo Utomo, and Beddy Y. Messakh, the strength of five types of wood—Meranti, Bayam, Jati Merah, Kemiri, and Kasuari—was analyzed through physical and mechanical tests in accordance with SNI 7973:2013. The results showed that Bayam wood had the highest strength, with a compressive strength parallel to the grain of 79.33 MPa and a bending strength of 174.66 MPa, while Kemiri wood had the lowest strength. The comparison of mechanical strength against the reference standard revealed varying percentage values, such as Bayam, achieving 197.80% for compressive strength parallel to the grain and 445.74% for bending strength. These findings emphasize the importance of classifying and selecting wood based on its mechanical properties to ensure safe and efficient construction [21].

Based on the research by Nurjannah Baharta, Servie O. Dapas, Ronny Pandaleke, a technical evaluation of traditional wooden houses produced in Woloan Village was conducted to assess their structural strength against earthquakes based on SNI standards. Using Ironwood (Aliwowos) for columns and beams and Nantu wood for walls and floors, the analysis included laboratory tests on mechanical properties and computational modeling with ETABS software. Results revealed that Ironwood has a modulus of elasticity of E = 13,771.83 MPa and Emin = 6436.655 MPa, meeting SNI 7973:2013 requirements. The study confirmed that these traditional wooden houses adhere to design standards and are capable of withstanding planned loads, emphasizing the importance of material testing and compliance with national codes for earthquake-resistant construction [22].

3.2. Analysis Structure of Wooden Truss

3.2.1. Purlin

The following figure illustrates the detailed results of the analysis performed on the purlin element, evaluated based on the specific requirements outlined in SNI 7973:2013 standard [16]. This analysis encompasses a wide range of critical parameters to ensure the structural adequacy and reliability of the element. Key aspects evaluated include the slenderness ratio of the flexural structure, control parameters in both the X and Y directions, shear resistance, factored shear force, and the allowable deflection under applied loads. Each parameter was carefully assessed to determine the element's ability to withstand design loads while adhering to the safety and performance criteria established in the standards. These results offer a comprehensive understanding of the purlin element's structural performance and provide a clear indication of its compliance with the applicable regulations. The analysis highlights the element's ability to meet the required specifications, ensuring its suitability for the intended application while maintaining structural safety and reliability.

The Table 1 displays the results of the analysis of curtain elements based on the SNI 7973:2013 standard. This analysis includes several important parameters to assess the structural feasibility of curtains. The slenderness ratio of the flexible structure is 14.42, indicating results that meet the standards. Bending moment control in terms of shear force parameters, factored shear force (103.9496 < 1708.8 kg), and shear resistance control ($0.106 \leq 1$) meet the criteria, indicating the curtain's ability to withstand shear force.

Table 1. Analysis requirements according to SNI 7973:2013.

Part	Analysis Requirements According to SNI 7973:2013	Result	Status
Purlin	Flexural structure slenderness ratio	14.42	Standard
	X direction control (Mux < Mx1)	244.324 < 363.8304	Standard
	Y direction control (Muy < My1)	179.19 < 181.9152	Standard
	Shear resistance control ≤ 1	1.65	Not Standard
	Factored shear force (transverse moment < factored shear force)	103.9496 < 1708.8 kg	Standard
	Shear resistance control ≤ 1	0.106	Standard
	Permit deflection (Δ lendutan $< \Delta$ ijin)	3.935 > 1.667	Not Standard

However, there are two parameters that do not meet the standards. First, the shear resistance control shows a value of 1.65, exceeding the maximum allowable limit ($\leq$1). Second, the deflection permit shows that the actual deflection (3.935) exceeds the allowable limit (1.667). These two deficiencies indicate potential weaknesses in the curtain elements that require further attention. Overall, although most parameters meet the standards, these elements require adjustment or strengthening in order to meet all the established criteria.

3.2.2. Truss

The following table provides a detailed strength analysis of the members in a truss structure. It includes a thorough evaluation of several key parameters critical to the performance of the structure, such as the slenderness ratio, corrected compressive capacity, and corrected tensile capacity. Additionally, the table assesses whether each member meets the requirements and complies with the applicable standards, ensuring the truss's structural integrity and safety. This analysis is essential to understanding the behavior of the truss under various loading conditions and verifying the adequacy of each member in carrying the applied loads. By presenting these technical parameters in a clear and organized manner, the table offers a comprehensive overview of the truss's performance, highlighting its reliability and compliance with design criteria. This information is crucial for engineers and designers in making informed decisions regarding the structure's design, optimization, and implementation.

The table above presents the strength analysis of structural members in a truss system, including the top chord A4, top chord B1, diagonal member V1, and vertical member H1. Each member was evaluated based on technical parameters such as slenderness ratio, corrected compressive capacity, and corrected tensile capacity. The top chord A4, which is under compression, has a slenderness ratio of 10.47, meeting the requirement of (Le/d \leq 50\), and a corrected compressive capacity of 7189.35 kg, significantly exceeding the axial force of 1235.12 kg, thus meeting the standard. The top chord B1, which is under tension, has a corrected tensile capacity of 3322.586 kg, greater than the axial force of 1183.23 kg, also meeting the standard. For the diagonal member V1, the slenderness ratios for three segments ((l1/d1, l2/d2, l3/d3\)) are 29.916, 14.958, and 9.822, respectively, all within the allowable limits. Additionally, the corrected tensile capacity of 6644.941 kg is much higher than the axial force of 517.93 kg, confirming its compliance with the standard. Lastly, the vertical member H1, which is under compression, has a slenderness ratio of 10.47 and a corrected compressive capacity of 8641.294 kg, far exceeding the axial force of 546.42 kg, thus meeting the standard. Overall, all the structural members in this truss system have been analyzed and found to comply with the applicable technical standards.

Based on Table 2, the summarized data regarding the loading conditions, detailed analysis was conducted to comprehensively model and evaluate the structural behavior of the truss system utilizing the SAP 2000 v21 application. This analytical process entailed the simulation of the deflection experienced by the truss structure under various loading scenarios, followed by an in-depth examination of the loads applied to the structural framework. Furthermore, the analysis included the determination of the support reactions arising as a consequence of the applied loads, as well as the computation of the axial forces generated within each individual structural member of the truss. Each of these analytical steps was meticulously executed with the primary objective of developing a thorough and nuanced understanding of the truss's overall performance, stability, and efficiency when subjected to the specified loading conditions. The detailed results and insights derived from this modeling process are outlined as follows.

Table 2. Summary of Truss Analysis Results.

Part	Requirement	Result	Status
A4 Top Bar (Press)	Slenderness ratio $Le_1/d_1 = \leq 50$	10.47	Standard
	Corrected compressive capacity ($P^1 \geq Pu$)	7189.35 kg $\geq$ 1235.12 kg	Standard
B1 Top Bar (Pull)	Corrected load capacity (T1) $\geq$ axial force of the truss (Tu)	3322.586 kg $\geq$ 1183.23 kg	Standard

Table 2. *Cont.*

Part	Requirement	Result	Status
V1 Diagonal Bar (Pull)	Slenderness ratio ($\ell 1/d1$) < 80	29.916 < 80	Standard
	Slenderness ratio ($\ell 2/d2$) < 50	14.958 < 50	Standard
	Slenderness ratio ($\ell 3/d3$) < 40	9.822 < 40	Standard
	Corrected tensile stress (T1) $\geq$ axial force of the truss (Tu)	6644.941 kg $\geq$ 517.93 kg	Standard
H1 Vertical Bar (Press)	Slenderness ratio (Le/d) $\leq$ 50	10.47	Standard
	Adjusted compressive capacity ($P^1 \geq$ Pu)	8641.294 kg $\geq$ 546.42 kg	Standard

3.2.3. Deflection Model

The following image illustrates the deflection model of the truss obtained through analysis using the SAP 2000 v21 application. This model provides a visual representation of the deformation experienced by the truss structure due to the applied loading, as well as the distribution of forces and support reactions within the system.

The image shown represents the deflection model of a truss structure analyzed using the SAP 2000 v21 application. The truss is depicted as a framework composed of multiple linear members connected at nodes, with boundary conditions clearly indicated. At the left and right ends of the truss, supports are shown: the left support is represented as a pinned support, which restricts both horizontal and vertical displacements but allows rotation, while the right support is a roller support, which permits horizontal movement while restricting vertical displacement.

The Figure 5 shown represents the deflection model of a truss structure analyzed using the SAP 2000 v21 application. The truss is depicted as a framework composed of multiple linear members connected at nodes, with boundary conditions clearly indicated. At the left and right ends of the truss, supports are shown: the left support is represented as a pinned support, which restricts both horizontal and vertical displacements but allows rotation, while the right support is a roller support, which permits horizontal movement while restricting vertical displacement.

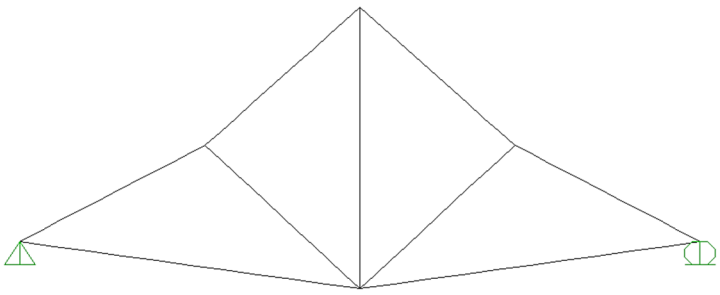

Figure 5. Deflection model in SAP 2000 v21. Source: Analysis results in SAP 2000 v21.

The central vertical member illustrates the apex of the truss, reflecting the highest point of deformation. The deflected shape, as represented in the model, indicates the structural behavior of the truss under applied loading. The deformation suggests how the forces are distributed throughout the truss members, with compression and tension forces acting in different directions depending on the load distribution.

This model aids in visualizing the overall performance of the truss, including the extent of deflection, the behavior of individual members, and the adequacy of the support system in sustaining the applied loads while maintaining structural integrity. Such analysis is essential for evaluating the safety and reliability of the truss under real-world loading conditions.

3.2.4. Load of Truss

The following images illustrate the distribution of various types of loads applied to the truss structure as analyzed using the SAP 2000 v21 application. These include the dead load, which represents the permanent static load of the structure, the live load, which accounts for variable and temporary loads, and the wind load, which simulates the lateral forces exerted by wind. Each load condition is visualized to show the magnitude and direction of the forces acting on the truss members, providing a comprehensive understanding of the loading scenarios analyzed in this study. In this study, the structural analysis is limited to three primary types of loads, which are described as follows:

Dead Load

Dead loads include the weight of the truss structure itself, along with additional components such as roof tiles, ceilings, and other permanent materials. This analysis ensures that the truss structure can withstand constant loads without experiencing excessive deformation, maintaining the stability and strength of the framework. The dead load modeling was performed using SAP 2000 v21, as illustrated in Figure 6.

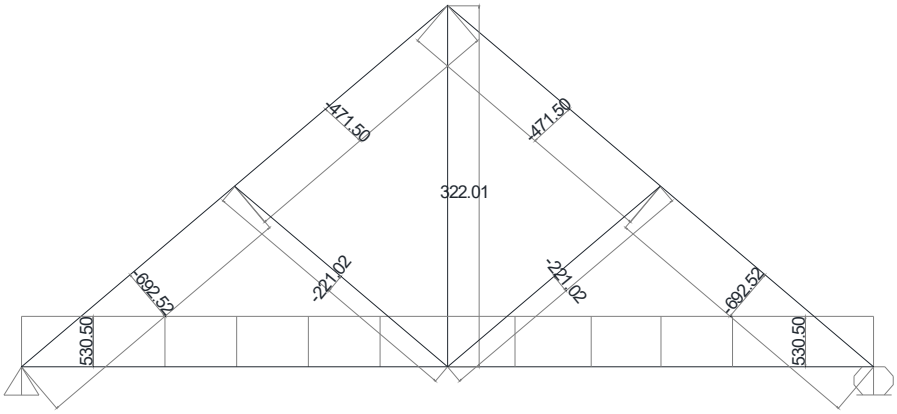

Figure 6. Dead load by SAP 2000 v21. Source: Analysis results in SAP 2000 v21.

Live Load

The outcome of SAP 2000 analysis depicts how live loads are distributed on the truss structure and how temporary forces are applied during usage, as illustrated in Figure 7.

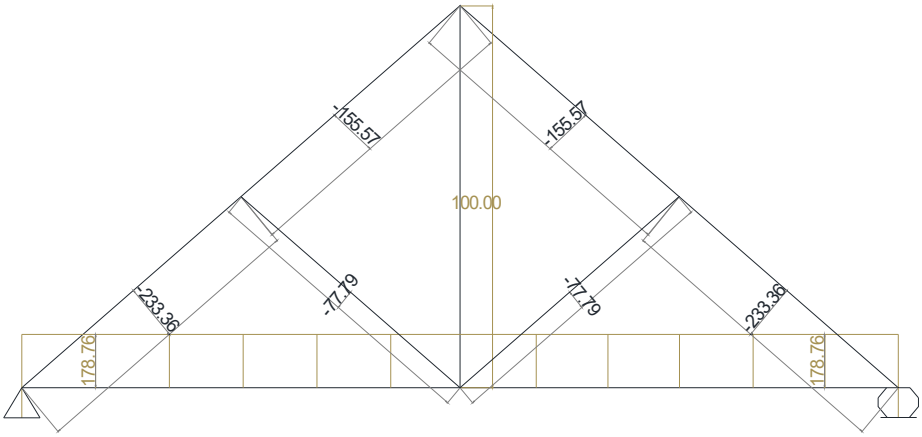

Figure 7. Live load by SAP 2000 v21. Source: Analysis results in SAP 2000 v21.

Live loads refer to non-permanent loads, such as the weight of workers during installation or other temporary loads that may occur during use. These loads are calculated to ensure that the truss structure can support additional loads without the risk of failure.

Wind Load

In this study, wind load was incorporated as an essential component of the structural assessment. The resulting distribution of wind forces on the truss structure, as obtained from the SAP 2000 v21 analysis, is illustrated in Figure 8.

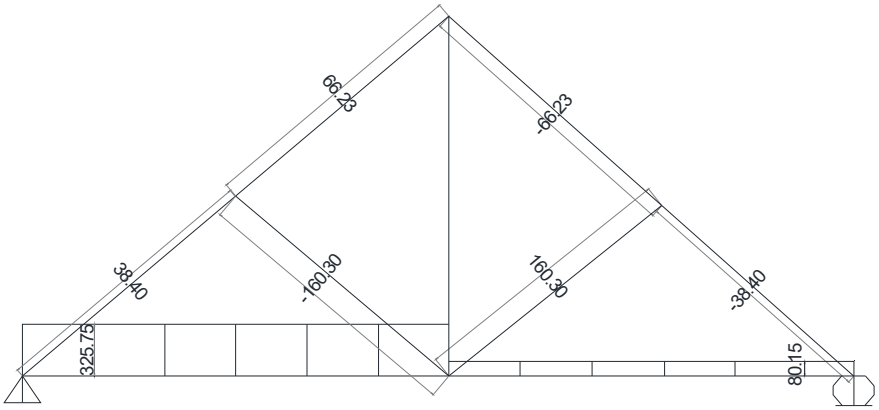

Figure 8. Wind load by SAP 2000 v21. Source: Analysis results in SAP 2000 v21.

Wind loads are analyzed to ensure the structure can resist lateral forces caused by wind pressure and suction. This analysis is crucial for roof structures exposed directly to environmental conditions, ensuring the truss design provides optimal stability against horizontal forces.

3.2.5. Load Placement Reaction

As part of the evaluation of the truss structure, an analysis of support reactions from various types of loads was conducted to understand the distribution of forces acting on the structural elements. The images below present the results of the support reaction simulations obtained using SAP 2000 v21 software.

Figure 9 depicts the support reactions due to dead loads. Dead loads produce relatively constant reactions on both sides of the supports, as reflected in the balanced force values. This analysis ensures that the structure can withstand permanent loads without experiencing excessive deformation.

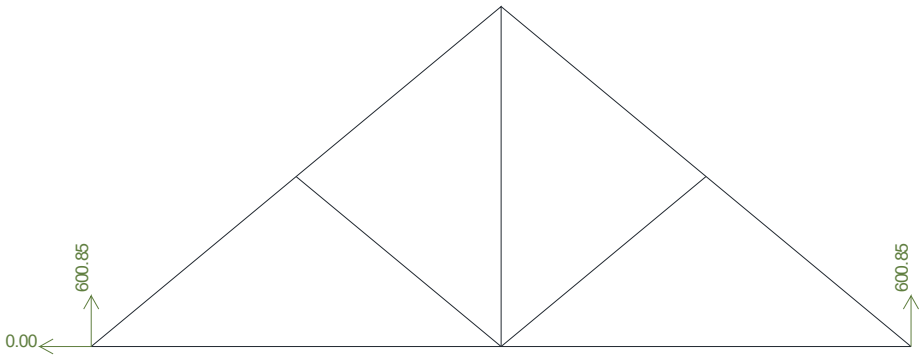

Figure 9. Dead load placement reaction in SAP 2000 v21.

Figure 10 illustrates the support reactions caused by live loads. These reactions show the vertical force distribution on both sides of the supports, ensuring that the truss structure can accommodate additional loads without compromising the stability or safety of the framework.

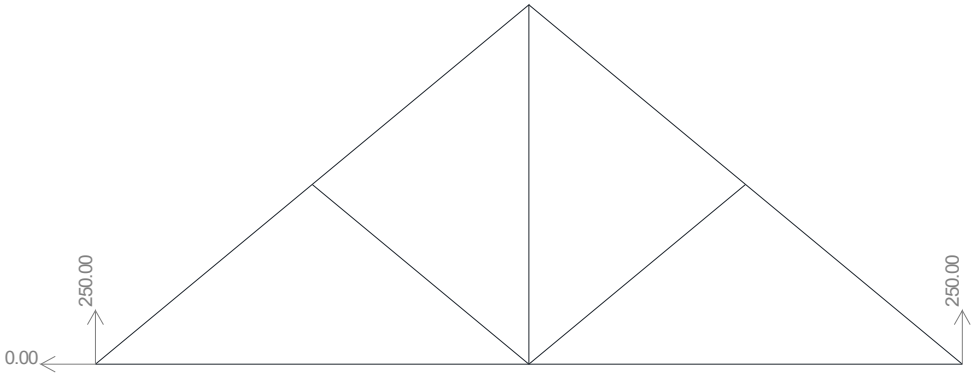

Figure 10. Live load placement reaction in SAP 2000 v21.

Figure 11 shows the support reactions resulting from wind loads, which involve both wind pressure and suction acting laterally on the structure. Wind loads generate significant horizontal forces on the supports, in addition to vertical forces. This analysis is crucial to ensure that the truss structure possesses adequate strength and stability against horizontal forces caused by environmental conditions, especially in areas exposed to strong winds.

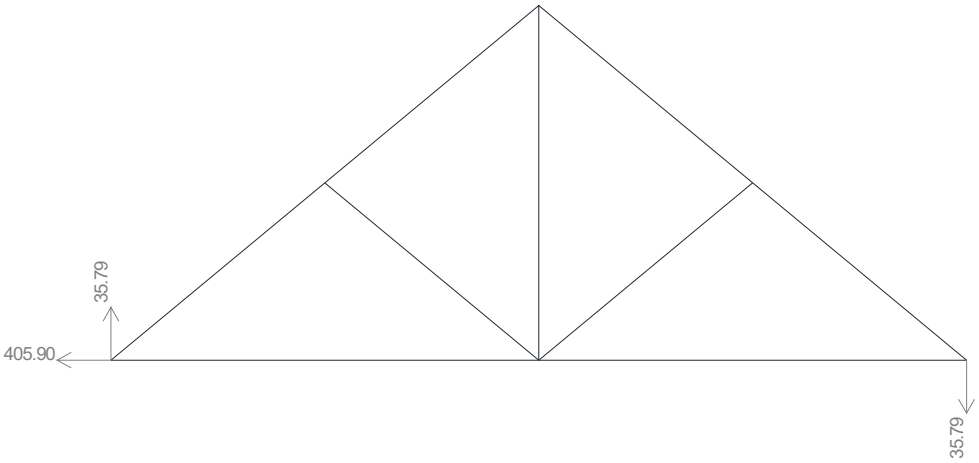

Figure 11. Wind load placement reaction in SAP 2000 v21.

3.3. Wood Material Requirement

The Kasepuhan Sinar Resmi traditional house consists of two types of buildings, namely a one-story house and a two- house. In this research, a traditional two-story house building type was used. In plan 1, it is known that the building area on the first floor is 55 m^2, and the second floor has an area of 13.8 m^2. The building uses a wooden structure, the walls use woven bamboo or planks, and the roof uses thatch, palm fiber, and asbestos. The two-story traditional house can be seen in the following in Figure 12:

The picture above shows a floor plan with a functional layout. At the front, there is a main terrace (+0.40) leading into the living room. Two bedrooms are situated on the left and center, connected to the living room. There is a staircase leading to the upper floor beside the living room. The rear part of the house includes the kitchen, hearth (traditional stove), and pantry (storage room), as well as a bathroom/WC (+0.33) adjacent to the kitchen. This floor plan is designed with clear dimensions for the comfort and efficiency of its inhabitants.

The Figure 13 shows the second-floor plan of a traditional house, based on the 2014 CAD drawing results. The plan includes several key areas: a balcony (+3.20) located at the front of the second floor, which likely serves as an open space for relaxation or enjoying the view. There are two bedrooms on this floor, positioned side by side with equal dimensions. Additionally, a staircase provides access to the lower floor, ensuring connectivity between

the levels. The plan includes clear dimensions for each space, designed for the efficiency and comfort of the occupants. Based on the plan image above, the wooden structure can be seen in the following image in Figure 14.

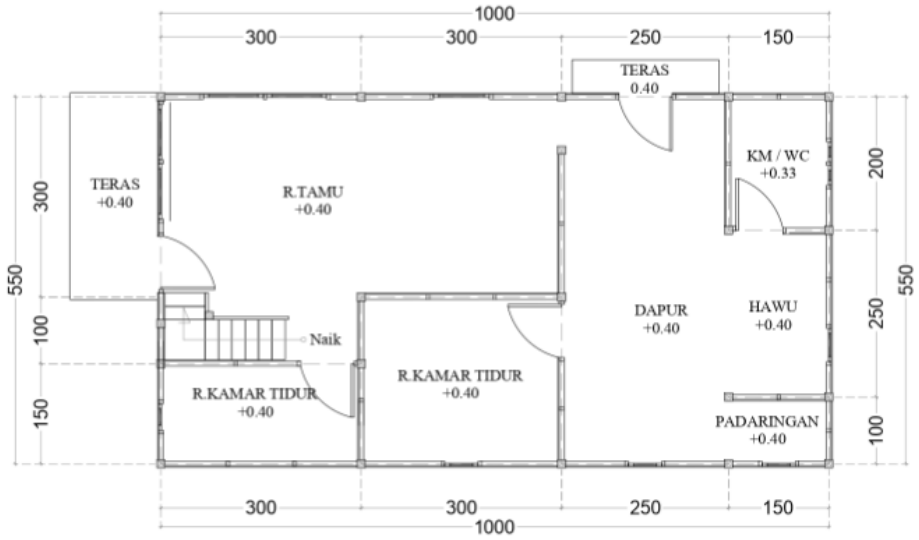

Figure 12. First floor of the traditional house plan. Source: 2014 CAD drawing results.

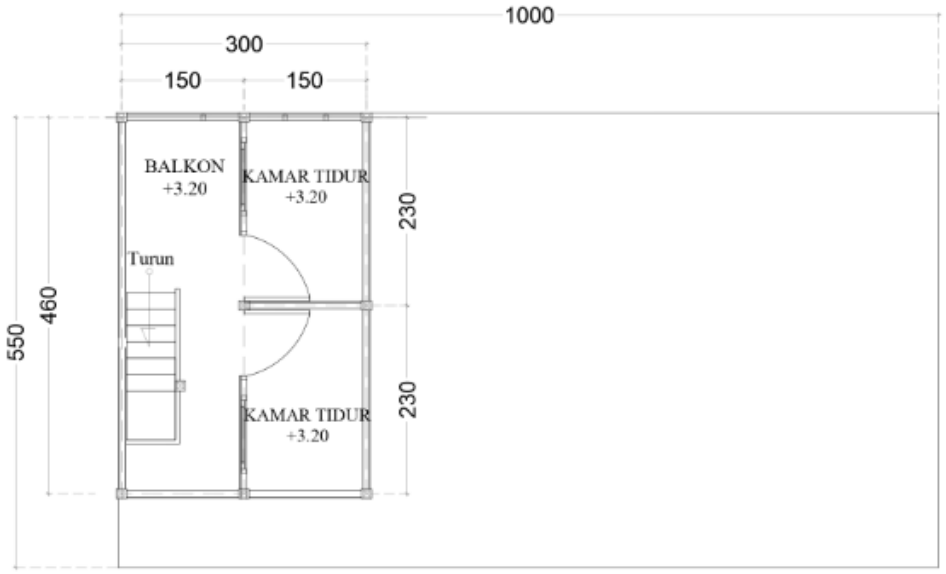

Figure 13. Second floor of the traditional house plan. Source: 2014 CAD drawing results.

The Figure 14 depicts a 3D visualization of the wooden structure of a traditional house, created using SketchUp in 2020. The structure highlights key architectural features, such as the use of wooden beams and columns to form the framework of the house. The elevated design, supported by sturdy wooden stilts, reflects traditional building techniques often used to adapt to specific environmental conditions, such as preventing flooding or enhancing ventilation. The roof design consists of multiple layers, emphasizing traditional aesthetics and functionality, such as rainwater runoff. The overall structure showcases a harmonious combination of traditional design and practical functionality.

The table below presents the data and the results of the material requirement analysis for structural and non-structural components. This data is designed to provide a systematic and measurable guide for planning material requirements.



Figure 14. Visualization of the wooden structure of a traditional house. Source: 2020 SketchUp image results.

The Table 3 presents various structural elements of a building that use wood as the primary material. The first element is the footing, with dimensions of 30 cm × 30 cm × 40 cm, requiring 22 units and a total volume of 0.792 m^3. The main column measures 12 cm × 12 cm × 300 cm, with 27 units needed and a total volume of 1.1664 m^3. Other columns, measuring 5 cm × 7 cm × 300 cm, require 50 units with a volume of 0.3675 m^3. The main beam, sized 12 cm × cm 12 × 400 cm, requires 51 units with a total volume of 2.9376 m^3. Additionally, other elements such as floor beams, rafters, struts, tie beams, and purlins are listed with detailed dimensions, the number of units required, and their total volumes. This data provides an overview of the quantity and volume of wood materials needed for the construction of the building.

Table 3. Structural wood building components.

Description	Dimension	Qty/Unit	Volume (m^3)
Umpak	30 × 30 × 40 cm	22 pcs	0.792 m^3
Main Column	12 × 12 × 300 cm	27 pcs	1.1664 m^3
Column	5 × 7 × 300 cm	35 pcs	0.3675 m^3
Main Beam	12 × 12 × 400 cm	51 pcs	2.9376 m^3
Floor Beam	12 × 12 × 400 cm	41 pcs	2.3616 m^3
Principal Rafter	6 × 12 × 400 cm	9 pcs	0.2592 m^3
Strut	6 × 12 × 400 cm	4 pcs	0.1152 m^3
Tie Beam	6 × 12 × 400 cm	10 pcs	0.288 m^3
Purlins	6 × 12 × 400 cm	21 pcs	0.6048 m^3

Table 4 presents the non structural components made of wood and bamboo used in building construction. The table includes a description of each component, such as Bamboo Booth, Bamboo Floor, Common Rafter, Panlat, and Ridge Board. Each component is detailed with its dimensions, material volume, and required quantity. For instance, the Bamboo Booth measures 200 cm × 300 cm with a total volume of 195 m^2, requiring 33 units, while the Ridge Board measures 2 cm × 20 cm × 400 cm with a volume of 0.04 m^3 for 3 units. This table systematically organizes information, aiding in efficient and precise material planning for construction projects.

Table 4. Non structural wood building components.

Description	Dimension	Volume	Qty
Bamboo Booth	200 × 300 cm	195 m^2	33 pcs
Bamboo Floor	Ø 10 × 400 cm	22 m^2	2 pcs
Common Rafter	5 × 7 × 400 cm	1.092 m^3	78 pcs
Panlat	3 × 4 × 400 cm	1.4208 m^3	296 pcs
Ijuk/Rumbia Roof	-	49.821 m^2	500 pcs
Window Frame	5 × 7 × 400 cm	0.342 m^3	24 pcs
Door Frame	5 × 7 × 400 cm	0.304 m^3	22 pcs
Exterior Cornice	2 × 20 × 400 cm	0.24464 m^3	16 pcs
Ridge Board	2 × 20 × 400 cm	0.04 m^3	3 pcs

4. Conclusions

This study successfully analyzed the structural strength of the traditional Kasepuhan Sinar Resmi house using SAP 2000 v21 technology and adhering to the SNI 7973:2013 standards. The traditional house, rich in philosophical and local values, utilizes natural materials such as wood and bamboo. This study conducted an in-depth analysis of the roof truss structure to ensure its strength and stability against dead loads, live loads, and wind loads.

The analysis results indicate that most structural components of the traditional house meet technical standards, although some parameters require improvement, such as deflection control and shear resistance in certain elements. Additionally, modeling with SAP 2000 provided visual insights into load distribution, internal forces, and support reactions, enhancing the traditional house design to comply with modern safety standards while preserving cultural and local values.

The quantity of building materials was analyzed to serve as a standard reference for constructing traditional Kasepuhan Sinar Resmi houses. This research offers guidance to the Kasepuhan Sinar Resmi community in constructing traditional houses that not only uphold cultural heritage but also meet national construction standards, making it a strategic step in preserving cultural heritage while ensuring the safety and efficiency of building structures.

Author Contributions: P. acted as the primary conceptualizer, designed the research idea, developed the methodology, coordinated data collection and analysis, and led the writing and revision of the manuscript. P. was also responsible for data validation, conducting focus group discussions (FGDs), and ensuring the integrity and authenticity of the study. S.L.M. contributed to field data collection, conducted interviews and FGDs, and assisted in data analysis and prepared the results section. S.L.M. also provided input for the manuscript writing and final revisions. N.S.N. participated in developing the research instruments and assisted in interpreting the results and discussion. N.S.N. was also involved in literature review and editing the manuscript. S.M. assisted in the data collection process and contributed to data analysis and writing the discussion section. S.M. also participated in the validation of the research findings. M.D.P. contributed to data collection, assisted in data analysis, and provided input for the writing and editing of the manuscript. All authors have read and agreed to the published version of the manuscript.

Funding: This research was funded by Nusa Putra University through the Nutral project.

Institutional Review Board Statement: Not applicable.

Informed Consent Statement: Not applicable.

Data Availability Statement: The data presented in this study are available on request from the corresponding author.

Conflicts of Interest: The authors declare no conflict of interest.

References

1. Purwanto, Y.; Sukara, E.; Sabilaajiningrum, P.; Priatna, D. Cultural diversity and biodiversity as foundation of sustainable development. *Indones. J. Appl. Environ. Stud.* **2021**, *1*, 1. [CrossRef]
2. Umar, E.P.; Nawir, A.; Jamaluddin, J.; Nurfalaq, A. The Influence of Environmental Geological Conditions on Deep Groundwater Potential in Makassar City. *J. Geocelebes* **2019**, *3*, 13–18. (In Indonesian) [CrossRef]
3. Aulia, A.N.; Veronica, S. Exploring Indonesia's Vernacular Architecture: Comparison of Environment and Culture Responsiveness. *J. Koridor* **2024**, *15*, 48–59. [CrossRef]
4. Usman, I.M.S.; Thien, N.E.J.; Md Nor, M.F.I.; Mohd Tahir, M.; Utaberta, N.; Saputra, A. Iconic Building Criteria in Determining Effectiveness Physical and Functional Aspects. *J. Kejuruter.* **2022**, *SI5*, 41–50. (In Malay) [CrossRef]
5. Nelson, L.H. Architectural Character: Identifying the Visual Aspects of Historic Buildings as an Aid to Preserving Their Character. Available online: https://www.nps.gov/orgs/1739/upload/preservation-brief-17-architectural-character.pdf (accessed on 29 August 2025).
6. Valsson, S. Reflection of Culture on Architecture. *Int. J. Archit. Herit.* **2020**, *3*, 17–29.
7. Zhang, M.; Wang, L.; Zhang, Q. Research on Subjective-Cultural Ecological Design System of Vernacular Architecture. *Sustainability* **2022**, *14*, 13564. [CrossRef]
8. Sunhadji, R.R.; Amdani, S.A.; Ma'rifah, S.L.; Prayoga, M.D.; Paikun, P.; Permadi, D.D. Preservation of Kasepuhan Traditional House Culture to Maintain Unesco Global Recognition Ciletuh Geopark. In Proceedings of the 2022 IEEE 8th International Conference on Computing, Engineering and Design (ICCED 2022), Sukabumi, Indonesia, 28–29 July 2022; pp. 1–6. [CrossRef]
9. Moore, T.; Doyon, A. *A Transition to Sustainable Housing: Progress and Prospects for a Low Carbon Housing Future*; Springer Nature Singapore Pte Ltd.: Singapore, 2023. [CrossRef]
10. Coolen, H.; Meesters, J. Editorial special issue: House, home and dwelling. *J. Hous. Built Environ.* **2012**, *27*, 1–10. [CrossRef]
11. Cahyono, H.S.; Arief, L.; Soedjarwoko, E.; Handini, D. Sub-Structure Analysis of BTS Tower on Low Soil Bearing Area. *BENTANG J. Teor. dan Terap. Bid. Rekayasa Sipil* **2025**, *2*, 195–210. [CrossRef]
12. Pudjiastuti, S.R.; Hadi, N.; Arfani, H.; Akbar, R.P.; Tajudin, A.S. The Culture and Local Wisdom of the Indigenous People Kasepuhan Sinar Resmi. *JhSS* **2021**, *5*, 198–202. [CrossRef]
13. Prasetyo, V.F.A.L. Traditions in the traditional houses of the Ngalum Ok tribe in the era of modernization. *ARTEKS J. Tek. Arsit.* **2019**, *3*, 139–148. (In Indonesian) [CrossRef]
14. Nanuru, R.F.; Munir, M.; Tjahyadi, S. Sasadu: The Religious Social Spirit of Sahu Tribe Community in North Maluku—Indonesia. *J. Soc. Sci. Res.* **2019**, *5*, 1274–1283. [CrossRef]
15. Puspatarini, R.A.; Erfina, A.; Ijudin, T.A. Digitization of Information on the Kasepuhan Sinar Traditional Village, Officially a UNESCO Global Geopark, Ciletuh—Palabuhan Ratu. *J. AKAL Abdimas dan Kearifan Lokal* **2023**, *4*, 37–51. (In Indonesian) [CrossRef]
16. *SNI 7973-2013*; Spesifikasi Desain untuk Konstruksi Kayu. Badan Standardisasi Nasional: Jakarta, Indonesia, 2013.
17. Timans, R.; Wouters, P.; Heilbron, J. Mixed methods research: What it is and what it could be. *Theory Soc.* **2019**, *48*, 193–216. [CrossRef]
18. Weston, L.E.; Krein, S.L.; Harrod, M. Using observation to better understand the healthcare context. *Qual. Res. Med. Healthc.* **2021**, *5*, 9821. [CrossRef] [PubMed]
19. Manda, Y.R.; Baradhi, K.M. Catheterization Risks and Complications. Available online: https://www.ncbi.nlm.nih.gov/books/NBK531461/ (accessed on 29 August 2025).
20. *RSNI PKKI NI-5- 2002*; Tata Cara Perencanaan Konstruksi Kayu Indonesia. Badan Standarisasi Nasional: Jakarta, Indonesia, 2002.
21. Hunggurami, E. Strong Identification of References to Types of Wood Traded in Kupang City Based on SNI 7973: 2013. *J. Tek. Sipil* **2016**, *5*, 175–184. (In Indonesian)
22. Dapas, S.O.; Pandaleke, R. Traditional Woloan Village Production in Respect of Earthquakes in Accordance with Indonesian National Standards (SNI). *J. Tek. Statik* **2019**, *7*, 527–536. (In Indonesian)

Disclaimer/Publisher's Note: The statements, opinions and data contained in all publications are solely those of the individual author(s) and contributor(s) and not of MDPI and/or the editor(s). MDPI and/or the editor(s) disclaim responsibility for any injury to people or property resulting from any ideas, methods, instructions or products referred to in the content.