eng

MDPI

Article

Aluminum Extrusion Simulation Using Finite Elements

Dimitrios Skarvelakis and Georgios E. Stavroulakis *

School of Production Engineering and Management, Technical University of Crete, GR-73100 Chania, Greece; dskarvelakis@tuc.gr

* Correspondence: gestavroulakis@tuc.gr; Tel.: +30-2821037418

Abstract

The complexity of an extrusion die profile is determined by its geometry. Various metrics such as the complexity index, shape factor, and form factor are used to quantify how geometric intricacy affects production costs, die life, energy consumption, product quality, and overall manufacturability. Bearing geometry plays a critical role in controlling metal flow and tool life in aluminum extrusion. In this study, a simulation-based investigation is performed to investigate the influence of bearing geometry on extrusion behavior using the finite element method. Two extrusion dies are examined: A single-cavity die with uniform bearing geometry and a dual-cavity die with controlled bearing geometry modification in one cavity. The results show that the bearing modification in the dual-cavity die causes severe flow imbalance, with exit velocity deviations. This imbalance leads to localized pressure amplification, increased thermal gradients, and stress concentration in critical die regions. In contrast, the single-cavity die, due to its simple geometry, exhibits uniform flow, stable pressure evolution, and low tool stress. These findings demonstrate the high sensitivity of multi-cavity extrusion dies to bearing geometry and highlight the importance of simulation-driven die design for achieving balanced flow and improved tool performance.

Keywords: metal forming; aluminum extrusion; extrusion die; elastoplastic finite element modeling

1. Introduction

Aluminum extrusion is one the most widely used metal forming processes. Due to its favorable strength-to-weight ratio and corrosion resistance, aluminum is extensively employed in automotive, construction and energy systems. In extrusion processes, the final product quality, production efficiency and tool life are strongly influenced by the design of the extrusion die.

Among the various die design parameters, bearing geometry plays a dominant role in controlling metal flow, extrusion pressure, temperature and stress development within the tool. Variations in bearing length or angle lead to different material velocities at the die exit and uneven surface quality, which significantly changes the extruded profile.

Using thermo-mechanical finite element simulations, the present study evaluates the effects of bearing geometry on metal flow velocity, extrusion pressure, temperature evolution, and tool stress. In particular, the relationship between die geometry, extrusion process parameters, and the resulting aluminum profile characteristics are investigated through a combination of theoretical review, geometric classification, and CAD-CAE-based simulation.

Check for updates

Academic Editor: Ruochen Liu

Received: 5 February 2026
Revised: 15 March 2026
Accepted: 17 March 2026
Published: 19 March 2026

Copyright: © 2026 by the authors. Licensee MDPI, Basel, Switzerland. This article is an open access article distributed under the terms and conditions of the Creative Commons Attribution (CC BY) license.

2. State of the Art

Extrusion is a fundamental metal-forming technique that transforms cast ingots into products with useful cross-sections and mechanical properties. The process relies on plastic deformation. Extrusion methods are generally classified as direct or indirect. In direct extrusion, the ram moves in the same direction as the material flow, while in indirect extrusion, the die moves toward a stationary billet, reducing friction between the billet and the container. Indirect extrusion typically produces superior dimensional accuracy and surface finish, but at lower production rates. Direct extrusion, on the other hand, offers higher throughput but requires careful control of process parameters to maintain quality.

Aluminum, the third most abundant element in the Earth's crust, is ideally suited to extrusion due to its excellent malleability, corrosion resistance, and strength-to-weight ratio. Hot extrusion, carried out at elevated temperatures, reduces flow stress, shortens processing time, and enables larger reductions in cross-sectional area. During direct extrusion, a cylindrical aluminum billet is placed in the container and compressed by a hydraulic ram through a die opening that defines the cross-section of the final product. A dummy block is positioned between the ram and billet to prevent contamination and tool wear.

A schematic of the direct extrusion process is shown in Figure 1. Further technological details can be found in monographs [1–6].

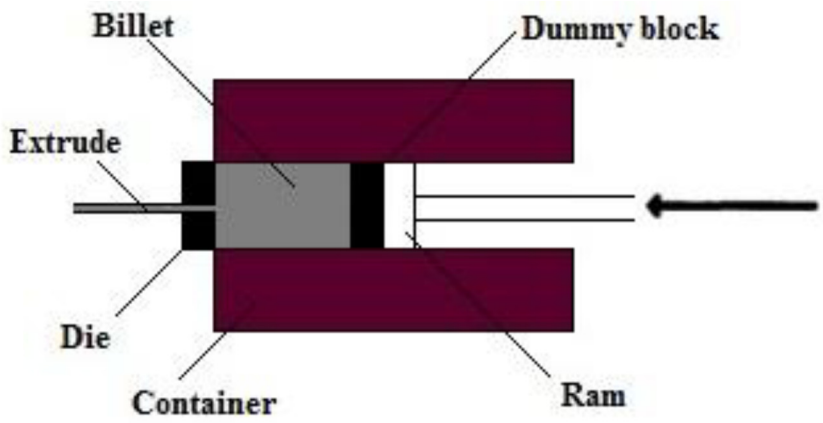

Figure 1. Extrusion press schematic.

During hot extrusion, temperature variations between the billet and the tooling can cause inconsistent flow and mechanical properties. To mitigate these effects, process parameters such as billet temperature, ram speed, lubrication, and die design must be carefully optimized.

2.1. Metal Extrusion

Metal extrusion is a fundamental manufacturing process in which a billet is forced through a die to produce long components with a constant cross-section. The method combines principles of plastic deformation and material flow under high compressive stress.

Extrusion can be performed hot or cold, depending on whether the billet is heated above its recrystallization temperature. Hot extrusion minimizes flow stress and improves formability, making it the preferred approach for aluminum and its alloys. Cold extrusion, although requiring higher pressures, provides superior dimensional accuracy and surface finish.

The basic equipment for an extrusion line includes:

- A hydraulic press, responsible for applying pressure on the billet.
- A container, which holds the billet during compression.
- A die, defining the final shape.
- Auxiliary components, such as dummy block, stem, and shears.

The direct extrusion process—widely used in the aluminum industry—forces the billet and ram to move in the same direction. Indirect extrusion, by contrast, moves the die toward a stationary billet, reducing friction and improving surface quality. A successful extrusion operation depends on careful control of temperature, ram speed, lubrication, and die geometry. Variations in these parameters affect metal flow, internal stresses, and surface integrity. Figure 2 illustrates the basic components of a hot aluminum extrusion press.

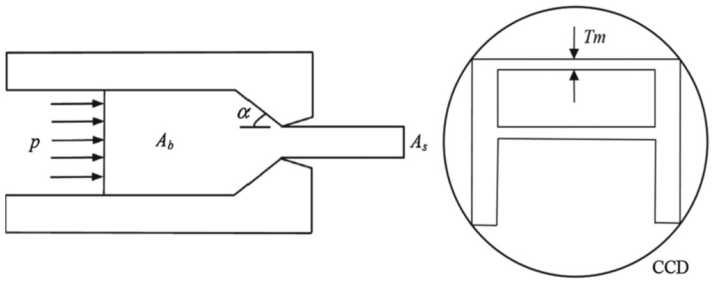

Figure 2. Geometrical die features of extruded profile: (**a**) cross-section of die, (**b**) cross-section of pressing element.

2.2. Shape Complexity

The complexity of an extruded profile is primarily defined by its cross-sectional geometry. Complex shapes may contain thin walls, enclosed cavities, or intricate features, all of which influence material flow and die wear.

Quantifying this complexity is essential for predicting manufacturing cost, required extrusion pressure, die life, and production feasibility. Several researchers have proposed methods to express profile complexity mathematically. For instance, one common measure is the Shape Complexity Factor (C_1), proposed by Lakshmanan:

$$C_1 = P/A$$

where

P = perimeter of the cross-section (mm);

A = area of the cross-section (mm^2);

Higher C_1 values correspond to thinner sections and more complex shapes.

Another useful indicator is the Form Factor (C_2), which accounts for shape slenderness and aspect ratio:

$$C_2 = P^2/4\pi A$$

For a perfect circle, $C_2 = 1$, while higher values denote increasingly irregular or elongated shapes.

The Shape Ratio (C_3) relates the maximum and minimum dimensions of the cross-section:

$$C_3 = D_{max}/D_{min}$$

This ratio is often employed to assess extrusion die difficulty and predict flow imbalance across the section.

In practice, these factors are used together to classify profiles as simple, moderately complex, or highly complex.

Further information related to classical approaches can be found in the literature, e.g., [7–12]. Using advanced computational mechanics tools, as it is proposed in the present paper, leads to more accurate results and prediction of process outputs.

2.3. Terminology and Classification

Extruded profiles are grouped into three main categories based on the presence and arrangement of cavities in their cross-sections:

1. Solid Profiles—shapes without any enclosed voids (e.g., bars, rods, angles).
2. Semi-Hollow Profiles—shapes with partially enclosed cavities or narrow gaps (e.g., channels, asymmetric T-sections).
3. Hollow Profiles—shapes with one or more completely enclosed voids (e.g., tubes, boxes).

Each class requires a specific die configuration:

- Solid dies for simple sections.
- Port-hole or bridge dies for hollow sections.
- Combination dies for semi-hollow geometries.

The choice of die type affects not only product geometry but also metal flow, extrusion load, and the likelihood of defects such as tearing or surface laps.

2.4. Pressure-Based Definition of Complexity

While geometric indices describe profile shape, pressure-based complexity provides a more practical measure related to manufacturing effort. This approach correlates the required extrusion pressure with the reference pressure for a circular bar of equal cross-sectional area.

According to [6], the Relative Extrusion Pressure (R_p) is defined as

$$R_p = P_{shape}/P_{circle}$$

where

P_{shape} = measured pressure for the actual profile;

P_{circle} = pressure for a circular reference section.

Higher R_p values indicate more complex shapes requiring greater forming energy.

This pressure-based method complements geometric complexity factors, allowing engineers to predict not only die difficulty but also energy consumption and press load capacity.

2.5. Overview of Die Designs and Categories

In the extrusion process, the die is the most critical tool because it defines the shape, dimensional accuracy, and surface quality of the final product.

An extrusion die is a thick steel plate with one or more precisely machined openings that determine the cross-sectional geometry of the extrudate.

Dies operate under extreme conditions of temperature, pressure, and friction. Typical contact pressures may exceed 500 MPa, and die surface temperatures can reach 500 °C during hot extrusion. Therefore, dies are usually manufactured from hardened tool steels such as H13, and are often nitrided to enhance wear resistance and thermal fatigue life.

A properly designed die ensures:

- Uniform metal flow across the cross-section;
- Balanced pressure distribution;
- Minimal defects such as tearing or flow lines;
- Efficient material utilization and longer tool life.

Depending on their design, dies may be categorized as:

- Solid-dies;
- Semi-hollow dies;
- Hollow dies;
- Special cases.

For further technological information, the reader can refer to the specialized literature, like [1–6].

2.6. Die Design Considerations

Designing an efficient extrusion die requires balancing geometry, material flow, and mechanical integrity.

The following factors are crucial:

1. Profile Geometry and Complexity: Determines die configuration, bearing length, and flow balancing features. Complex hollow shapes require multi-part dies with welding chambers.
2. Material Flow Uniformity: Achieved by adjusting bearing lengths, entry angles, and flow channels to equalize velocity across the section.
3. Bearing Length Optimization: Longer bearings increase resistance and slow flow; shorter bearings accelerate flow. Proper tuning prevents defects such as twist or dimensional distortion.
4. Thermal Management: Uniform die temperature is essential to avoid uneven flow or premature die failure. Pre-heating and controlled cooling systems are commonly employed.
5. Strength and Rigidity: The die must withstand extrusion pressures without distortion. Finite element analysis (FEA) is often used to predict stress distribution.
6. Ease of Manufacture and Maintenance: Simpler dies reduce machining cost and downtime. Modular designs allow easier cleaning and component replacement.

A well-designed die not only produces accurate and defect-free profiles but also reduces energy consumption and extends tool life.

2.7. Material Modeling

The billet material was modeled as aluminum alloy AA6060.

Its material behavior during hot extrusion was described using a temperature-dependent viscoplastic constitutive law. Under hot forming conditions, aluminum alloys undergo large plastic deformation, and their flow stress depends strongly on plastic strain, strain rate, and temperature.

The equivalent flow stress was defined as

$$\sigma f = f(\varepsilon p, \dot{\varepsilon}, T)$$

where εp is the equivalent plastic strain, $\dot{\varepsilon}$ the strain rate, and T the temperature.

The adopted flow law incorporates:

- Strain hardening effects;
- Strain-rate sensitivity;
- Thermal softening during deformation.

Strain-rate sensitivity was included through experimentally calibrated flow curves available in the Altair Inspire Extrude Metal material database for AA6xxx series alloys. The material exhibits rate-dependent viscoplastic behavior typical of hot aluminum extrusion, where increasing strain rate leads to higher flow stress due to reduced time for thermally activated dislocation motion.

Thermophysical properties used in the simulations were:

- Density $\rho \approx 2685$–2700 kg/m^3;
- Young's modulus $E \approx 70$ GPa;
- Poisson's ratio $\nu \approx 0.33$;
- Thermal conductivity $k \approx 200$ W/m·K;

- Specific heat Cp ≈ 900 J/kg·K;
- Solidus temperature ≈ 889 K (≈616 °C).

Thermal effects were fully coupled with mechanical deformation, allowing temperature evolution due to plastic work and frictional heating to influence the instantaneous material strength.

2.8. Frictional Contact Interaction Modeling

Contact interaction between the billet and tooling surfaces was modeled using a Coulomb-type friction law, which is commonly adopted in finite element simulations of aluminum extrusion processes.

The interfacial shear stress τ at the billet–tool interface was defined as:

$$\tau = \mu \cdot p$$

where μ represents the friction coefficient and p the normal contact pressure.

A constant friction coefficient μ = 0.30 was applied at all billet–container and billet–die contact interfaces. This value corresponds to typical industrial hot extrusion conditions for aluminum alloys, accounting for lubrication effects and oxide-layer formation at elevated temperatures.

The friction model assumes sticking–sliding transition behavior automatically handled by the contact algorithm of the extrusion solver. Under high contact pressure regions, local sticking conditions may develop, while sliding dominates in regions of lower shear resistance.

The temperature dependence of friction was not introduced explicitly. Instead, thermal effects were indirectly considered through the fully coupled thermo-mechanical formulation, where temperature evolution affects material flow stress, contact pressure, and consequently the effective frictional response.

Frictional heat generation at the billet–tool interface was included in the energy balance of the simulation, contributing to local temperature rise near bearing regions and die entry zones.

3. Numerical Methodology

The numerical analysis of the aluminum extrusion process was conducted using Altair inspire extrude metal (2025 version). The software enables fully coupled thermomechanical simulations of hot extrusion processes, accounting for large plastic deformation, material behavior and contact interactions between the billet and the die assembly. The present investigation was inspired by relevant references advocating for computational mechanics tools [13,14].

Direct hot extrusion conditions were assumed for all cases. The billet and die assembly were initialized at uniform temperature of 450 °C, while a constant ram speed of 5 mm/s was applied. Ambient temperature was set to 25 °C. Apart from geometric differences between the examined dies, all process parameters were kept identical to isolate the influence of die and bearing geometry on extrusion behavior.

4. Case Study Descriptions

To investigate the influences of die geometry and bearing design on aluminum extrusion performance, two industrially representative extrusion dies with different levels of geometric complexity were selected as case studies. The dies were chosen to enable a direct comparison between a simple-balanced extrusion and a more complex multicavity design in which localized geometric modification could be evaluated.

The selected dies represent two common scenarios encountered in industrial practice:

- A single-cavity die designed for stable and uniform extrusion;
- A dual-cavity die intended to increase productivity but is more sensitive to flow imbalance.

4.1. Profile A—Single-Cavity Extrusion Die

This die incorporates a single bearing region with constant height and smooth curvature, designed to promote uniform metal flow. The CAD model is shown in Figure 3.

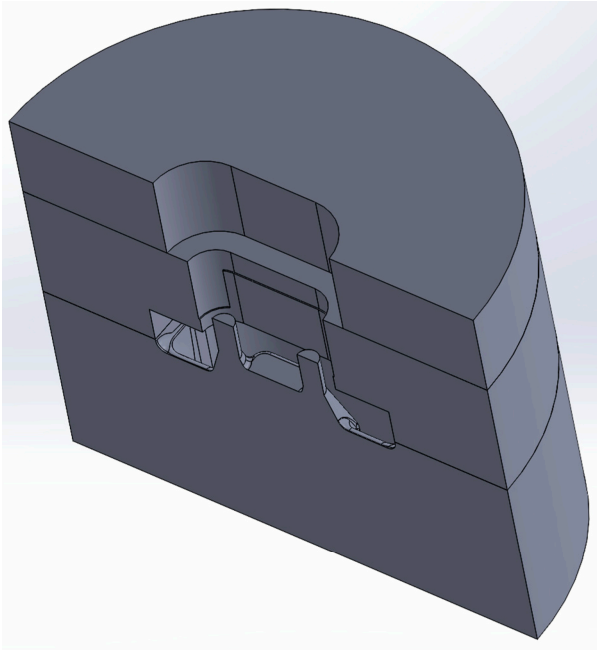

Figure 3. Model of the single-cavity die. From top to bottom: the welding region (to parts), the bearing region, and in between the flow channel.

The simplicity of the profile allows the extrusion process to operate with minimal disturbance to material flow. No internal cavities or asymmetries are present. As a result, profile A serves as a reference configuration, representing a baseline case for stable extrusion behavior.

4.2. Profile B—Dual-Cavity Extrusion Die

Profile B represents a more complex dual-cavity extrusion die designed to produce two aluminum profiles simultaneously within a single die block. In this configuration, both cavities share a common die body and welding chamber, while each cavity contains its own bearing region and flow channel.

To further study the effect of bearing geometry on extrusion, a controlled geometric modification was introduced in one cavity of profile B. The modification was intentionally limited to the bearing region, while all other aspects remained unchanged.

Specifically:

- Cavity 1 retains the original industrial bearing geometry, featuring variable bearing length and curvature optimized for balanced flow.
- Cavity 2 incorporates a simplified bearing design, in which the original geometry is replaced by a flattened bearing surface of constant height.

The CAD model is shown in Figure 4.

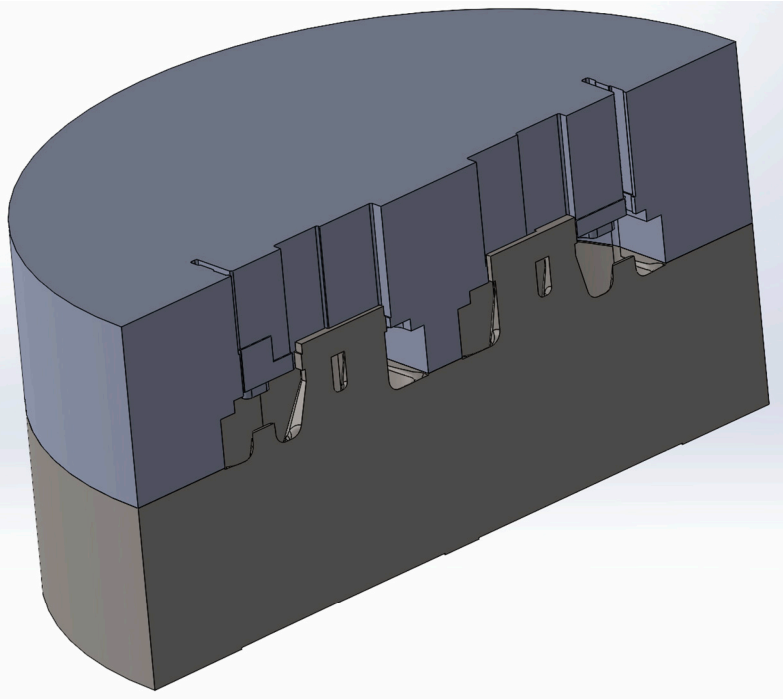

Figure 4. Model of the dual-cavity die. From top to bottom: the welding region, the bearing region, and in between the flow channels.

5. Simulation Results

Thermo-mechanical finite element simulations were successfully completed for both extrusion dies under identical process conditions. The results are presented in terms of velocity fields, pressure distributions, temperature contours and die stress (von Mises) maps. For all presented results, the loading is assumed to be applied in 1000 equal time steps within the usual Newton–Raphson iterative procedure adopted by finite element packages. This information will not be repeated in the figures of this chapter.

5.1. Profile A

The simulated extrusion process for profile A required a total ram force of 13.65 MN, corresponding to a maximum extrusion pressure of about 535 MPa. Pressure peaks were concentrated near the die entrance and bearing transition zone.

The smooth pressure gradient and lack of localized pressure spikes suggest efficient load transfer and low flow resistance.

The overall temperature variation across the profile cross-section did not exceed 1.4%, indicating balanced heat generation due to plastic deformation and friction.

The von Mises stress distribution in the die body shows a maximum stress level of approximately 56.6 MPa, located near the bearing choke region. These stress levels are far below the yield strength of the tool steel at operating temperature, indicating a substantial safety margin and minimal risk of plastic deformation.

The results shown in this section are indicative of the expected ones (Figures 5–8). Details depend on the specific parameters used and are not presented due to space limitations.

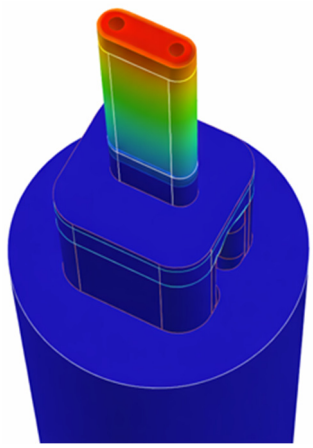

Figure 5. Velocity contours (close view of Figure 6, similar scale).

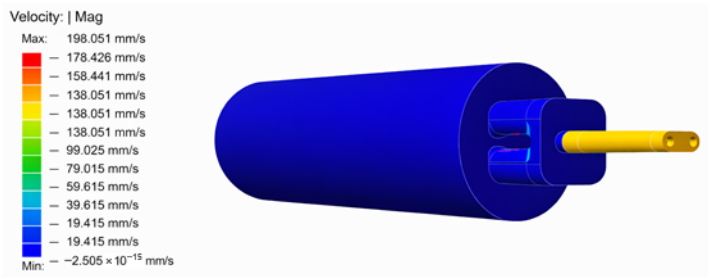

Figure 6. Velocity contours.

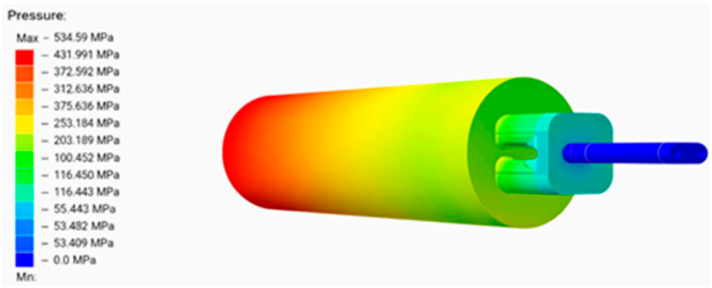

Figure 7. Pressure contours.

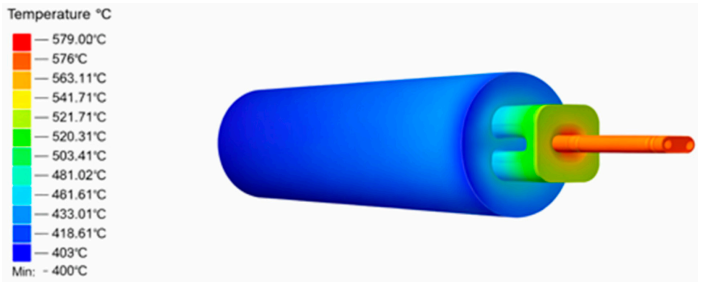

Figure 8. Temperature contours.

5.2. Profile B

The cavity incorporating the flattened bearing geometry exhibited significantly higher exit velocities, with a maximum value of 643 mm/s, more than three times that observed in profile A.

Velocity imbalance between the two exit holes was substantial, reaching deviations of up to +70% in the extrusion direction for one cavity and +28% for the second. These deviations clearly demonstrate that the bearing geometry modification strongly affects flow resistance and material distribution within the die.

The maximum extrusion pressure for profile B reached 489.6 MPa, with localized pressure peaks concentrated near the porthole entrance and the modified bearing region.

The maximum temperature reached approximately 551 °C.

Surface temperature variation across the profile ranged from approximately 1.0% to 2.9%, reflecting the influence of uneven metal flow and differential deformation rates between the two cavities. Although these values remain within acceptable industrial limits, the increased thermal imbalance may affect weld quality and surface consistency in multi-cavity extrusion.

The von Mises stress distribution for profile B indicates a maximum stress level of approximately 62.6 MPa, located at the intersection between the bridge structure and the flattened bearing region. Results are shown in Figures 9–12.

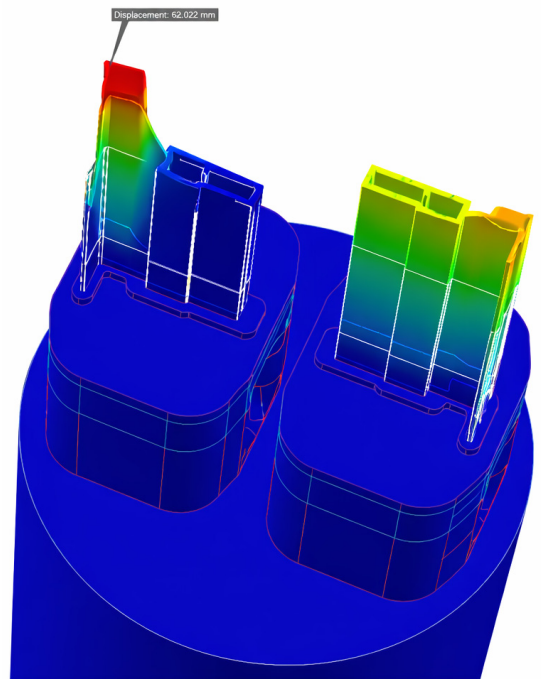

Figure 9. Details of the analysis.

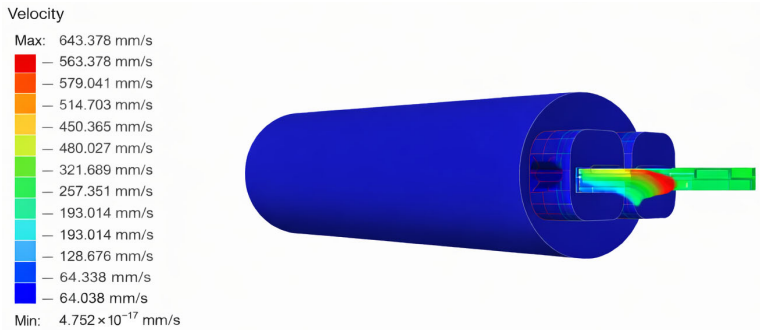

Figure 10. Velocity contours.

Concerning the finite element analysis meshing features of the software and reasonable accuracy in order to track the nonlinear procedure, an incremental iterative procedure was used. It should be noted that the billet, despite having a larger volume, has fewer elements in comparison with the elements and the volume of the pockets. This is a reasonable feature of the FEM software (2025 version).

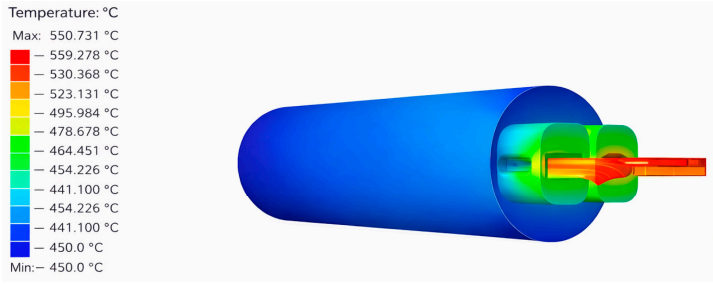

Figure 11. Temperature contours.

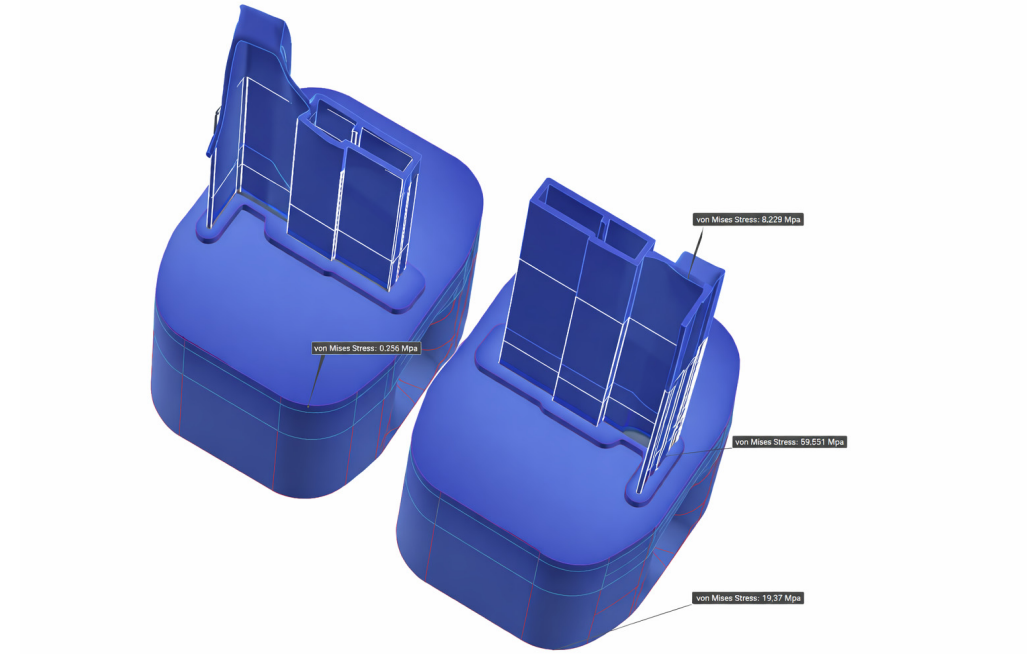

Profile Shape Predictions

The velocity distribution at the exit surface is used for determining if the mass flow is balanced. In addition, this data is used to predict profile shape and compute extrusion profile length.

Boundary Name : ExitHole1
Flow Imbalance in the Extrusion Direction (%) = +70.22 to −64.20
Velocity in X-Direction is large - Will cause the profile to deflect.
Velocity in Y-Direction is large - Will cause the profile to deflect.

Boundary Name : ExitHole2
Flow Imbalance in the Extrusion Direction (%) = +28.18 to +10.95
Velocity in X-Direction is large - Will cause the profile to deflect.
Velocity in Y-Direction is large - Will cause the profile to deflect.

Figure 12. Profile shape predictions and information provided by Altair Inspire Extrude Metal Software (version 2025).

In particular, mesh refinement was intentionally concentrated in regions characterized by strong thermo-mechanical gradients, including:

- Bearing zones;
- Welding chamber regions;
- Bridge–mandrel interfaces;
- Die exit areas.

Element size varied approximately between 0.3 mm and 1.2 mm depending on the local geometric complexity. Adaptive remeshing was activated during the solution procedure in order to maintain element quality under large plastic deformation and continuous material flow.

For the single-cavity configuration (profile A), the final computational model consisted of approximately 350,000–420,000 finite elements.

For the dual-cavity configuration (profile B), increased geometric complexity required a denser discretization, resulting in approximately 1.1 million elements and about 336,000 nodes, ensuring adequate resolution of asymmetric flow behavior between the two extrusion channels.

Mesh densification was therefore applied selectively rather than globally, allowing accurate capture of velocity gradients, pressure peaks, and thermal variations while maintaining reasonable computational cost.

Although experimental measurements were not available, the physical realism of the numerical results was assessed through comparison with well-established industrial ranges reported in aluminum extrusion literature.

Typical extrusion pressures for AA6xxx alloys range between 400 MPa and 800 MPa depending on extrusion ratio and profile complexity. The predicted pressures in this study (≈490–535 MPa) fall within this expected range.

Steady-state extrusion temperatures for AA6060 alloys commonly lie between 450 °C and 580 °C. The simulated temperature fields remain fully inside this interval, indicating realistic thermo-mechanical conditions.

Industrial exit velocities typically range from approximately 100 mm/s to several hundred mm/s, particularly in multi-cavity dies where local flow imbalance may occur. The obtained velocities (≈198 mm/s for profile A and up to ≈643 mm/s for profile B) are therefore consistent with documented extrusion behavior.

Die stresses reported in extrusion simulations are generally well below the yield strength of H13 tool steel (<100 MPa during stable operation). The calculated stresses of approximately 56–63 MPa agree with expected industrial operating conditions.

Based on these comparisons, the numerical predictions are considered representative of realistic extrusion behavior. Consequently, the conclusions of this work should be interpreted as simulation-based insights into relative flow tendencies and die performance rather than experimentally validated process limits.

6. Discussion

Profile A produced highly uniform pressure and velocity distributions, validating the effectiveness of the simple geometry in promoting balanced flow.

Profile B exhibited a significant flow imbalance (±70% at exit) owing to the bearing modification. This supports findings that even minor geometric variations in bearing and mandrel regions can substantially affect flow behavior.

This reinforces the principle that die bearing geometry dominates flow uniformity, a key design insight frequently noted in the aluminum extrusion literature.

While both profiles fell within typical industrial load ranges, profile B's load distribution was less uniform and showed higher local peaks.

The threefold increase in maximum exit velocity for profile B (≈643 mm/s) compared to profile A (≈198 mm/s) underscores how bearing alterations accelerate material flow in specific paths, creating imbalances.

This behavior is consistent with simulation studies of aluminum extrusion, which state that velocity non-uniformity is a major source of defects (profile distortion, weld seam weaknesses) and is influenced by die geometry and process parameters (e.g., ram speed, billet temperature).

Both profiles achieved acceptable temperature ranges (close to 450–580 °C) for the alloy type, but profile B showed a larger surface temperature variation (~2.9%) vs. profile A (~1.4%).

This confirms that geometric imbalances (flow differences) translate into thermal imbalances, which eventually may affect metallurgical and surface quality.

Although the maximum extrusion pressures obtained for profile A (~535 MPa) and profile B (~490 MPa) are of comparable magnitude, the resulting velocity fields differ significantly. This apparent inconsistency arises from the fundamentally different flow-control mechanisms governing single-cavity and multi-cavity extrusion dies.

Extrusion pressure represents a global process quantity mainly determined by the overall extrusion ratio, billet temperature, and average deformation resistance of the material. Consequently, similar pressure levels may be obtained even when local flow conditions differ substantially.

In contrast, exit velocity distribution is primarily controlled by local flow resistance within the die, which is strongly influenced by bearing geometry, channel symmetry, and flow path complexity. Profile A consists of a single cavity with uniform bearing geometry, leading to homogeneous flow resistance and therefore balanced velocity distribution.

Profile B, however, represents a dual-cavity configuration with asymmetric bearing conditions. The intentional flattening of the bearing in one cavity locally reduces frictional resistance and effective flow length. Even small geometric variations in bearing height or curvature can significantly modify local metal flow resistance, causing preferential material acceleration toward the path of least resistance.

As a result, the material redistributes internally without requiring a substantial increase in global extrusion pressure. The press continues to operate at nearly the same load, while the metal flow reorganizes locally, producing large velocity differences between the exit channels.

This behavior is consistent with established aluminum extrusion theories, where velocity imbalance is governed mainly by local bearing resistance rather than overall extrusion pressure. Multi-cavity dies are therefore highly sensitive to geometric asymmetries, and relatively small pressure variations may correspond to large differences in exit velocity and profile stability.

The maximum die stresses obtained from the simulations (56.6 MPa for profile A and 62.6 MPa for profile B) remain significantly lower than the high-temperature yield strength of typical extrusion tool steels such as H13, which generally exceeds 900 MPa under operating conditions. From a purely static strength perspective, both die configurations therefore exhibit a large safety margin against plastic deformation or immediate structural failure.

However, extrusion dies rarely fail due to static overloading. In industrial practice, tool degradation is primarily governed by thermo-mechanical fatigue mechanisms arising from repeated extrusion cycles. During production, the die undergoes cyclic heating from contact with the hot billet followed by partial cooling between extrusion strokes. These repeated thermal gradients generate cyclic expansion and contraction of the tool material, promoting surface crack initiation commonly referred to as heat checking.

Although the computed stress levels are low, localized stress concentrations observed near bearing transitions and bridge intersections—particularly in profile B—may act as potential fatigue initiation sites under long-term cyclic operation. The dual-cavity configuration introduces slightly higher stress localization and larger thermal gradients due to flow imbalance, which can accelerate crack nucleation compared to the more uniform single-cavity design.

Therefore, while static stresses indicate safe operation, long-term die life is expected to be controlled by thermal fatigue resistance rather than peak stress magnitude. Proper die preheating, controlled cooling, nitriding treatments, and optimized bearing geometry remain critical measures to mitigate thermo-mechanical fatigue during industrial extrusion.

Furthermore, small increases in temperature locally reduce material strength due to thermal softening effects. Consequently, regions operating at slightly higher temperatures

tend to accelerate material flow, reinforcing the velocity imbalance between extrusion channels. This coupling between temperature and flow resistance is particularly critical in multi-cavity dies, where uniform exit velocity is required to maintain dimensional stability. From an industrial perspective, such thermal non-uniformity may influence several production aspects, including surface finish consistency, dimensional tolerances, and residual stress development after cooling and stretching operations. Even temperature differences within a few percent may therefore contribute to profile distortion, unequal exit lengths, or variations in mechanical properties between simultaneously extruded profiles.

Beyond refined computational modeling techniques, future investigations may use computational data produced by a suitable parametric investigation in order to train an artificial neural network and provide a Reduced Order Model based on Artificial Intelligence (ROM-AI) that predicts results quickly, in the sense of a Digital Twin, e.g., see [15].

Author Contributions: Conceptualization, D.S. and G.E.S.; methodology, D.S.; software, D.S.; validation, D.S. and G.E.S.; formal analysis, D.S.; investigation, D.S.; writing—original draft preparation, D.S.; writing—review and editing, D.S. and G.E.S.; visualization, D.S.; supervision, G.E.S. All authors have read and agreed to the published version of the manuscript.

Funding: This research received no external funding.

Data Availability Statement: The data presented in this study are available on request from the first author due to proprietary rights of the Company that provided the information.

Acknowledgments: The authors would like to sincerely thank Panagiotis Tounis, CEO of MATREX Extrusion Dies (Thessaloniki, Greece), for providing the industrial drawings and technical information used in this work. The industrial drawings were provided by MATREX Extrusion Dies with permission for academic use and public dissemination. Their contribution was invaluable in enabling the realistic modeling and analysis of industrial aluminum extrusion dies for academic research purposes. The numerical simulations presented in this thesis were performed using Altair Inspire Extrude Metal, which was accessed through Altair Engineering's official student licensing program. We gratefully acknowledge Altair Engineering for providing free academic access to advanced simulation tools that support education and research in metal forming and manufacturing processes.

Conflicts of Interest: The authors declare no conflicts of interest.

References

1. Laue, K.; Stenrer, H. *Extrusion: Processes, Machinery, Tooling*; American Society for Metals, Metals Park: Novelty, OH, USA, 1981.
2. Altan, T.; Oh, S.-I.; Gegel, H.L. *Metal Forming: Fundamentals and Applications*; American Society for Metals, Metals Park: Novelty, OH, USA, 1983.
3. Qamar, S.Z.; Sheikh, A.K.; Arif, A.F.M. *Modelling and Analysis of Aluminum Extrusion: Process, Tooling and Defects*; LAP Lambert Academic Publishing: Saarbrücken, Germany, 2011.
4. Aluminum Extrusion Counsil. *Aluminum Extruders Council: Al*; AEC, Aluminum Extrusion Counsil: Wauconda, IL, USA, 2023. Available online: www.aec.org (accessed on 15 March 2026).
5. Saha, P.K. Aluminum Extrusion Technology. In *ASM Handbook*, 2nd ed.; ASM International: Almere, The Netherlands, 2025.
6. Sheppard, T. *Extrusion of Aluminium Alloys*; Springer: Berlin/Heidelberg, Germany, 1999.
7. Ma, X. Surface Quality of Aluminium Extrusion Products. Ph.D. Thesis, University of Twente, Enschede, The Netherlands, 2011. [CrossRef]
8. Qamar, S.Z.; Arif, A.F.M.; Sheikh, A.K. An investigation of shape complexity in metal extrusion. In Proceedings of the International Conference on Advances in Materials and Processing Technologies AMPT, Dublin, Ireland, 8–11 July 2003; pp. 1178–1183.
9. Qamar, S.Z.; Sheikh, A.K.; Arif, A.F.M.; Pervez, T. Defining shape complexity of extrusion dies: A reliabilistic view. *Mater. Manuf. Processes* **2007**, *22*, 804–810. [CrossRef]
10. Wang, Y.; Wells, M.A. The Effect of the Bridge's Angle during Porthole Die Extrusion of Aluminum AA6082. *Metals* **2023**, *13*, 605. [CrossRef]

11. Truong, T.-T.; Hsu, Q.-C.; Tong, V.-C. Effects of Solid Die Types in Complex and Large-Scale Aluminum Profile Extrusion. *Appl. Sci.* **2020**, *10*, 263. [CrossRef]
12. Hovden, S.; Kronsteiner, J.; Arnold, A. Parameter study of extrusion simulation and grain structure prediction for 6xxx alloys with varied Fe content. *Mater. Today Commun.* **2024**, *38*, 108128. [CrossRef]
13. Saha, S.C.; Kumar, S. Finite Element Simulation of Aluminum Extrusion Process: A Review. *Int. J. Mater. Form.* **2011**, *4*, 157–174.
14. van Rens, B.J.E. Finite Element Simulation of the Aluminum Extrusion Process: Shape Prediction for Complex Profiles. Ph.D. Thesis, TU/e Mechanical Engineering, Technische Universiteit Eindhoven, Eindhoven, The Netherlands, 1999. [CrossRef]
15. Spathopoulos, S.C.; Stavroulakis, G.E. Springback Prediction in Sheet Metal Forming, Based on Finite Element Analysis and Artificial Neural Network Approach. *Appl. Mech.* **2020**, *1*, 97–110. [CrossRef]

Disclaimer/Publisher's Note: The statements, opinions and data contained in all publications are solely those of the individual author(s) and contributor(s) and not of MDPI and/or the editor(s). MDPI and/or the editor(s) disclaim responsibility for any injury to people or property resulting from any ideas, methods, instructions or products referred to in the content.