AgriEngineering

MDPI

Review

Mechanical Harvesting of Olive Orchards: An Overview on Trunk Shakers

Gaetano Messina †, Matteo Sbaglia † and Bruno Bernardi *

Dipartimento di Agraria, Università degli Studi Mediterranea di Reggio Calabria, Località Feo di Vito, 89122 Reggio Calabria, Italy; gaetano.messina@unirc.it (G.M.); matteo.sbaglia@unirc.it (M.S.)

* Correspondence: bruno.bernardi@unirc.it

† These authors contributed equally to the article.

Abstract: Olive cultivation is still concentrated within the Mediterranean basin, although the last thirty years have seen an expansion into geographical areas outside it. Traditional olive groves, with large planting distances and centuries-old trees, still predominate. However, more and more space is being given over to modern plantations, which allow an ever-increasing degree of mechanisation, although some legal restrictions, often related to the monumental nature of the plantations, make the conversion of old plantations into new ones not always easy. The extreme case is super-intensive olive growing, where the very concept of olive growing has been rethought. In this context, harvesting is the most time-consuming and costly of the cultivation operations. Without it, or rather without a high degree of mechanisation, it is still not possible to produce high-quality oils. A leading role is always played by the trunk shakers, who are still the undisputed protagonists in this sector. This review looks at trunk shakers in olive groves, showing the latest models, and their strengths and weaknesses, based on the research carried out in recent decades.

Keywords: olive growing; machinery; mechanisation; vibration; technical performance

check for updates

Academic Editor: Travis Esau

Received: 18 November 2024
Revised: 24 January 2025
Accepted: 16 February 2025
Published: 21 February 2025

Citation: Messina, G.; Sbaglia, M.; Bernardi, B. Mechanical Harvesting of Olive Orchards: An Overview on Trunk Shakers. *AgriEngineering* **2025**, *7*, 52. https://doi.org/10.3390/agriengineering7030052

Copyright: © 2025 by the authors. Licensee MDPI, Basel, Switzerland. This article is an open access article distributed under the terms and conditions of the Creative Commons Attribution (CC BY) license (https://creativecommons.org/licenses/by/4.0/).

1. Introduction

In the Mediterranean basin, olive cultivation has historically played a leading productive role in the agro-food sector, linked to the landscape and hydrological protection [1].

The olive tree derives its domestication from its wild ancestor, the oleaster (*Olea europaea* ssp. europaea var. sylvestris), according to archaeological and genetic sources, dating from about 6000 years ago in the Middle East in an area between Turkey and Syria [2–4]. Phoenicians and Greeks likely played an important role in the spread of the olive tree (introduced by Greeks in Marseille 2500 years ago together with new methods of cultivation) [5–7]. Subsequent changes in olive growing and demand for its main products, olive oil and table olives, have been uneven, with periods of expansion and contraction associated with demographic changes and political factors [7]. Nowadays, olive growing has expanded outside the Mediterranean basin, also "reaching" America and Australia [8].

The latest discoveries in the field of nutrition, which consider extra virgin olive oil to be a harbinger of many health benefits [9,10], have led to a renewed interest in olive growing, encouraging research and technological development to invest and apply more in this sector, which represents both the traditions and the future of many agricultural realities in the Mediterranean countries [11,12]. The future of olive growing therefore depends on the sector's ability to improve existing technologies and propose new ones, not only to meet the needs of the crop, but also to help farms meet the challenges of climate change [13,14].

Harvesting is the most time-consuming and costly of the cultivation operations [15,16]. Using traditional labour-intensive methods with sticks and nets, harvesting accounts for between 50 and 80% of the cost of olive production [17]. It is too costly to be economically viable and time-consuming, which is incompatible with producing high-quality oils [18]. Another difficulty can be finding workers during the harvest season. [19,20]. Such problems risk encouraging non-harvesting and abandonment of olive groves in the presence of low yields and unfavourable soil conditions for harvesting [14,21,22]. However, the possibility of mechanising harvesting and other agronomical operations depends on the characteristics of the plantations in terms of spacing and slope of the cultivated areas [23]. In this perspective, Mediterranean countries such as Spain, Italy, and Greece are characterised by a certain heterogeneity in their olive-growing landscape [24,25]. There are small olive groves in steeply sloping areas, such as those in Greece and Italy [26–28], which are different in structure, layout, and management from those in the Spanish regions of Andalusia and Catalonia, where super-intensive olive growing is practised [18,29–32]. Slopes of more than 20% in marginal olive groves complicate mechanisation, unless tracked vehicles are used and special access roads are prepared, and in any case are time-consuming and reduce harvester capacity [33]. In addition, the risk of summer drought and consequent water stress has led to the establishment of low-density olive groves in Mediterranean areas [34], increasing the value of arid and marginal land in the recent past and promoting the valorisation of local cultivars [11,13,19]. On the other hand, olive groves on non-sloping land with a higher density (more than 300 trees ha^{-1}) and with planting distances of 5–7 m × 5–7 m are well suited to mechanisation and the use of trunk shakers for harvesting, as are super-intensive olive groves with a very high density (1100–2500 trees ha^{-1}) with distances of 3.5–4.0 m between rows and 1.2–1.6 m in the row, suitable for continuous harvesting using modified grape harvesters on some particularly suitable cultivars [22,35–38].

Olive harvesting mechanisation began in the late 1940s to 1960s with the introduction of pneumatic aids and nets, replacing hand tools, ladders, and baskets to reduce work time and safety risks [16]. This led to the development of tractor-mounted trunk shakers [39,40]. The machine offers excellent manoeuvrability and agility, with later innovations enhancing speed, harvesting precision, minimising tree damage, and optimising oscillations for more effective olive detachment [41].

The environmental factors that most influence the efficiency of mechanical harvesting by trunk shaking are related to the characteristics of the plant, such as the preferably semi-rigid structure of the branches, the characteristics of the fruit, the mass of which determines the resistance to vibration-induced detachment, and finally, as mentioned above, the spatial and slope characteristics of the olive-growing areas. With regard to the first aspect, although the machines are designed to adapt to the characteristics of the plants, the plants should also be set up for more efficient harvesting [42]. The relationship between tree architecture and harvesting technology is determined by the mechanical harvesting systems available, which have different vibration patterns [43]. The behaviour of the tree under vibration is related to the spatial and temporal arrangement of the trunk, branches, and shoots [36]. A tree with a single trunk, free of lateral branches for 1 m, facilitates the grip of the vibrator, while the effective transmission of vibrations is facilitated by a suitable skeletal structure, a higher centre of gravity of the canopy, and an adequate ratio between height and lateral extent. Pruning therefore plays an important role in adapting trees to mechanised harvesting [44].

For plants whose drupes are intended for oil production, the use of trunk shakers does not alter the quality characteristics compared to manual harvesting but has indirect positive effects [45–47]. In fact, by making it possible to mechanise the harvesting of practically all varieties and by concentrating this operation in the period considered optimal for the

production objective pursued, this makes it possible to obtain a product of a quality that is in line with the commercial strategies of the market [15]. Identifying the possibilities offered by harvesting mechanisation allows for the determination of the conditions in which the performance of the machines guarantees product quality and safety at work during harvesting.

This review focuses on the role of trunk shakers in olive-growing farm management form by illustrating the state-of-the-art trunk shaker models, their strengths and weaknesses, and their applications in olive growing in research carried out in recent decades. The structure of the review is as follows: Section 2 deals with the operating principles of trunk shakers; Section 3 contains descriptions of the trunk shaker models most used, focusing on applications in olive growing from the early 2000s until now; and Section 4 contains discussions about the present—as well as future—challenges in the presented framework.

2. Operating Principles of Trunk Shakers

Shakers are machines capable of inducing a dynamic effect on the plant using forced vibrations of appropriate frequency and amplitude by suitably positioning a special clamping device on the trunk or primary branches of the tree. This vibrating action, transmitted from the trunk to the branches and then to the fruiting branches, makes it possible to overcome the resistant force that keeps the drupe anchored to its stalk, causing it to detach.

As reported by Affeldt et al. [48] and Vieri [49], the development of shakers in olive orchards began as early as the 1940s with tractor-mounted units, while machines for the shake-harvesting of tree fruits were proposed for use in U.S. fruit and nut crops in the early 1920s. The early shaker used in olive growing was a "cable-arm shaker", which consisted of a simple flexible wire rope. It often broke branches and was therefore very limited in use. This was followed by the "shock-arm shaker", in which a crank train mechanism produced a rectilinear reciprocating motion, with the arm serving as the active element in the vibration of the tree. The shaking action was therefore unidirectional and of constant amplitude, but the rigid connection between the vibrating head and the arm mounted on the tractor meant that vibrations were also transmitted to the tractor. Eccentric mass shakers date back to the 1960s. The symbol of this innovation was the SR12 machine [50], which combined a trunk shaker with a reversed umbrella-shaped collector with an olive recovery and cleaning system. The drive unit is a tracked excavator with a turntable. The intercepting unit consists of a temporary olive storage tank with a volume of approximately 250 kg of olives, connected to an aspirator–stripper installed at the rear of the excavator, which empties the umbrella storage tank and cleans the olives. Subsequent attempts at innovation have aimed at improving the speed of movement and positioning of the harvesting organs, reducing both damage to the tree and oscillations that can be effective in detaching olives [41].

The development of shakers then came to a standstill. Bark damage in the area of shaker attachment on trees became a serious concern. However, in the 1990s, several manufacturers began to develop increasingly efficient machines suitable for different types of farming.

The main components include a shaking head, characterised by the presence of vibration mechanisms, which is connected, through anchoring and stabilisation elements, to the transport arm and the respective hydraulic drive systems. The efficiency and success of the system depend on the precise coordination of these components.

The shaking head consists of a clamping device (gripper) with a central body, inside of which there are one or more unbalanced masses, powered by a hydraulic motor used to drive components that require rotary motion, which generates the vibration (Figure 1a).



Figure 1. (**a**) Trunk shaker's gripping organ (clamp); (**b**) pivoting arm of variable length; (**c**) self-propelled trunk shaker; (**d**) trunk shaker coupled to a tractor.

A hydraulic motor is a mechanical actuator that converts hydraulic pressure and flow into torque and angular displacement (rotation), imparting motion to the working components powered by an energy source. The hydraulic system is completed by the hydraulic pumps (driven by the power take-off or, in the case of self-propelled machines, by the transmission system), which are responsible for pushing hydraulic oil through the circuits, creating the pressure necessary to drive the hydraulic motor and other actuators. It includes hydraulic tubes, pumps, valves, and actuators that direct fluid to the shaker arm (Figure 1b).

Clamping pads, coated with yielding material in contact with the trunk, complete the gripper structure. The clamping pads are important to avoid damaging the plant; above them, several sheets of plastic materials are typically interposed so that rubbing occurs between them and not on the bark. Shaker heads with one or three clamping bearings can be used on small trunks (0.4 m). The latter better transmits the vibrations to the tree, reducing the risk of bark damage, but is even more closely related to the dimensions of the trunks [34]. Two clamping bearings can be used on trunks of variable sizes (over 0.6 m).

The anchoring system of the shaking head to the mechanical arm used to move it is typically made of chains or springs. These components help maintain the stability of the shaker head during operation, ensuring that it applies uniform and constant shaking to the trunk and isolates the shaking head from the rest of the machine during operation.

The transport arm mounted on the machine used (tractor or self-propelled vehicle) (Figure 1c,d) supports the shaking head during transport and operation, keeping it stable so that it can apply vibration effectively without compromising the safety of the tree or equipment. The arm allows the head to be positioned so that the clamping jaws can properly act on the trunk. This ensures that the vibration is applied correctly, promoting fruit separation without damaging the plant. The transport arm is connected to the hydraulic system, which allows the head to be raised, lowered, and tilted according to operational needs. In this way, the operator can easily adjust the orientation of the head during operation. The transport arm also helps to isolate the head from the rest of the machine, reducing the transmission

of vibrations that could interfere with other mechanical components of the machine or compromise operational stability.

A control system allows the operator to monitor and adjust the settings of the shaker head. It typically includes control panels or joysticks on the harvesting machine to adjust the power, intensity, and movement of the shaker arms.

The moving parts of the shaker head require regular lubrication to reduce wear and friction, ensuring smooth operation and extending the lifespan of the equipment. Lubrication systems can be automatic or manual, with grease points located on the shaker arms, vibration components, and other moving parts.

At present, trunk shakers operate, basically, according to two basic criteria: orbital or multidirectional action [51]. Orbital shakers consist of an eccentric mass rotating at high speed in a clamp capable of gripping the trunk and applying a forced vibration (Figure 2) [52]. In the case of multidirectional vibratory motion, two vibrating masses rotating in opposite directions drive the shaker (the trajectory of the motion takes place, at successive times, in directions that vary concerning the line of application of the arm itself), thanks to which it is possible to obtain a wide range of oscillations on the "plant-olive" system, with greater efficiency of olive detachment (Figure 3).

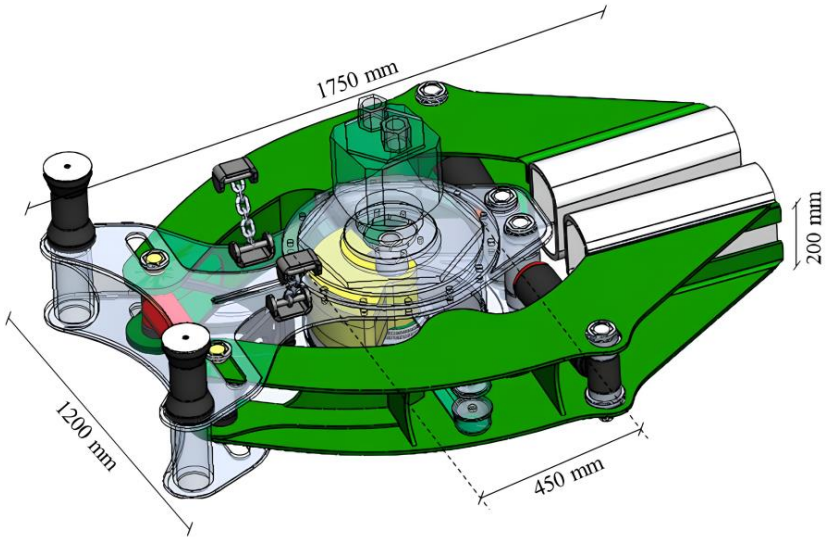

Figure 2. Orbital trunk shaker [52].

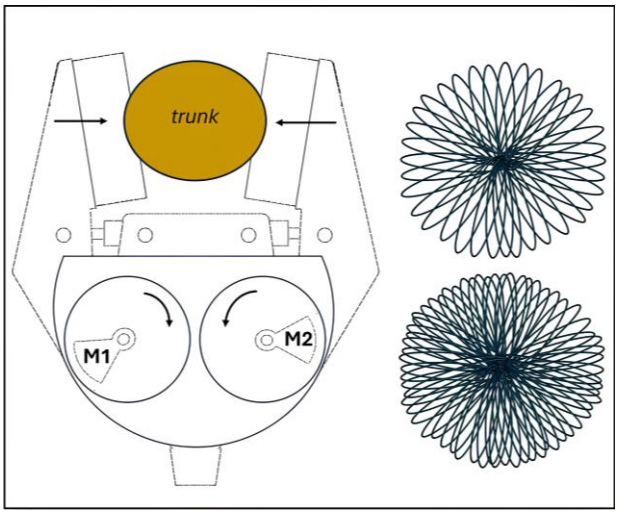

Figure 3. Multidirectional trunk shaker (**on the left**). Examples of orbits generated (**on the right**).

In the beginning, the trunk shaker was based on a unidirectional transmission system with a thrust crank attached to the rotating mass. However, this system generated a vibration that was transmitted to the entire arm (and therefore the entire machine) and not just to the vibration head, so it was abandoned.

The action of the trunk shaker is based on the principle of inducing a dynamic action (vibration) on the trunk, branches, or twigs to cause the olives to detach from the stems. Most modern shakers exploit the principle of inertia: the vibrating head of the shaker, located at the end of an articulated arm and consisting of a jaw protected by two special rubber rollers by the rotation of eccentric masses, vibrates, generating inertia stresses of varying intensity that are transmitted to the trunk or branch to which the head is applied. This determines the fall of olives, which are intercepted by nets arranged under the canopy. The amount of product harvested is a function of ripeness [53].

Many researchers have studied the design of shakers and their optimisation, and several solutions have been indicated around optimal vibration frequencies, averaging between 10 and 40 Hz, and a small zero-to-peak vibration (0.1 to 10 cm) on the trunk in the horizontal (x-y) plane. To reach these results, various aspects were analysed, such as plant vibration frequencies [54–56], vertical plane and roots [57,58], damping [59,60], clamp–trunk design and coupling [61–64], operating conditions [65], plant structures [66,67], and fruit detachment force/fruit weight ratio [68]. In addition, the use of a robotic system [69] was tested.

Sanchez-Cachinero et al. [52] reported that many parameters affect trees, including mass, stiffness, and damping, which vary along the plant and between trees. This variability makes optimising shakers difficult. Many trees with significant differences are required while waiting for harvesting time and considering damage.

Other characteristics being equal, there are higher yields the stiffer the plant is and the vibration frequency of the trunk shaker approaches the plant's resonance frequency. The latter is a particular frequency value also called natural frequency and is an intrinsic characteristic of the body that varies according to the material and its geometry and thus its inertia [70,71]. If the body is excited with a harmonic forcer with a frequency equal to the resonance frequency, the resonance phenomenon is achieved, from which this frequency takes its name. Under ideal conditions at the resonant frequency, an amplification of the amplitude of the oscillations is obtained without varying the force.

Analysing an individual vibrating mass with a single degree of freedom [62], as reported in Figure 4, is necessary to understand how to obtain the resonance frequency mathematically. The dynamic of the system can be described by the following equation (Equation (1)):

$$M\ddot{x}(t) + C\dot{x}(t) + Kx(t) = f(t) \quad (1)$$

where M = mass, K = elastic constant, C = damping coefficient, f(t) = periodic excitation force (time-dependent), $x(t)$ = mass's displacement (time-dependent), $\dot{x}(t)$ = displacement's derivate, and $\ddot{x}(t)$ = displacement's second derivate, i.e., the mass acceleration. Figure 5 represents the response to the frequency function module and phase, where it is possible to read important information about the natural frequency of the system and the phase shift in the system response compared to the forcing.

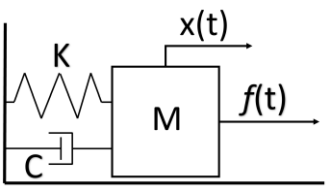

Figure 4. Single-degree-of-freedom system.

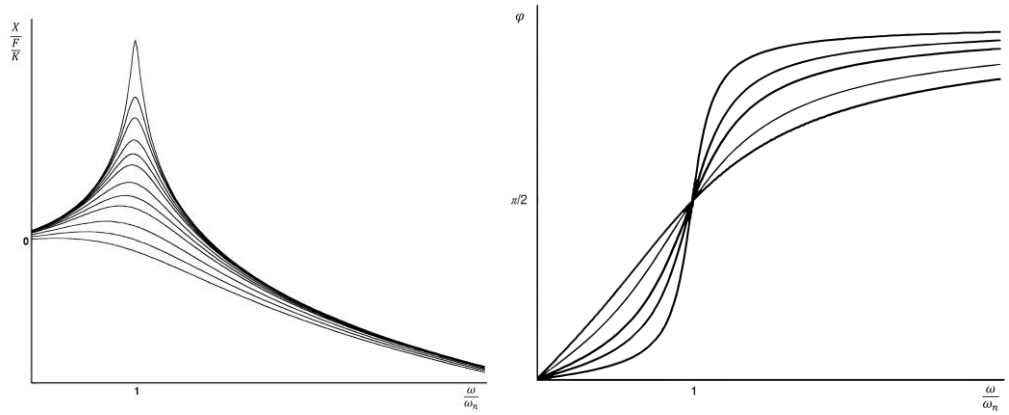

Figure 5. Frequency response function module and phase.

Defining the natural frequency of a complex-shape continuous body mathematically is not simple, and for this reason, modal analysis is used. In the modal analysis, a continuous body is discretized in a finite number of very simple shapes, making it a multi-degree-of-freedom system. It follows that Equation (1) becomes a matrix equation like Equation (2) as shown in [72]:

$$[M]\{\ddot{x}\} + [C]\{\dot{x}\} + [K]\{x\} = \{f(t)\} \quad (2)$$

where [M] = mass matrix, [C] = damping matrix, [K] = stiffness matrix, {f(t)} = periodic excitation force vector of every node, {ẍ} = acceleration vector, $\{\dot{x}\}$ = velocity vector, and {x} = mass displacement vector.

Thus, the natural frequency of the system will not be one but will be n natural frequencies called modes of vibration equal to the number of elements into which the body has been discretized (Figure 6); the lowest of the n natural frequencies is called "fundamental", and all-natural frequencies are multiples of the fundamental frequency.

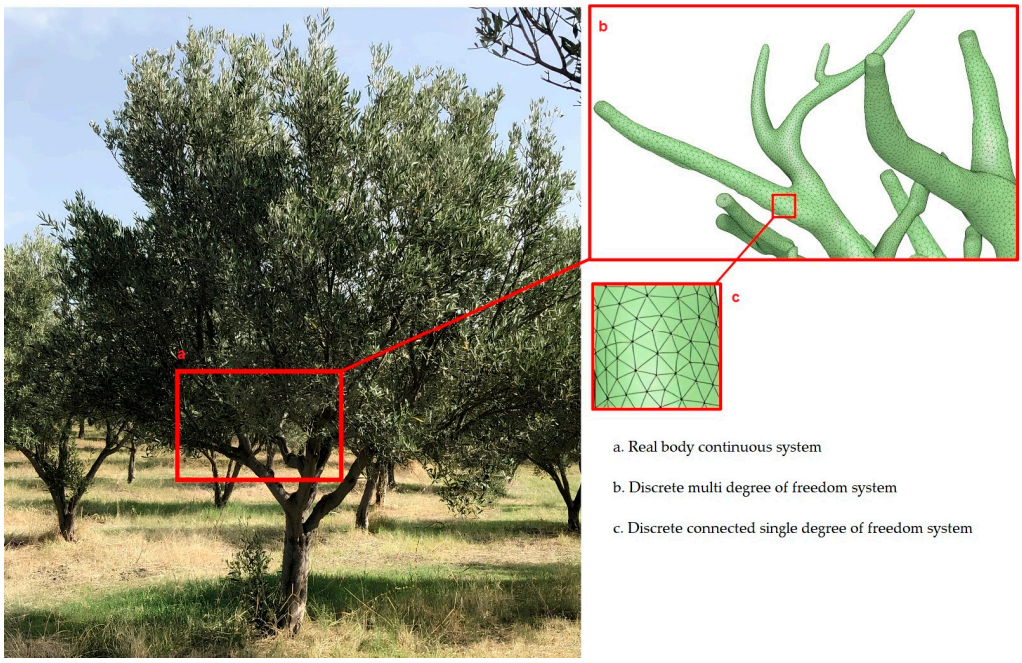

Figure 6. Example of olive tree discretisation.

Each mode of vibration will cause different parts of the body to oscillate differently, changing points of maximum oscillation and points that do not oscillate, called shaft nodes. For each natural frequency, as its value increases, the number of nodes, and the points that

remain stationary during the oscillation, increases. Given the varying characteristics of each plant, the duration of the vibration is very variable when trying to intercept the optimum frequencies of the vibrations, from 8 to 10 s to more than 20 s [53]. However, increasing the time does not increase productivity, but it does cause damage to the equipment.

Fruit detachment force (expressed in Newton, N) influences the mechanical harvest percentage and also depends on the variety and harvest time. It is high when it exceeds 6 N and medium when it is around 3–4 N [63,73,74]. On the other hand, considering the ratio of fruit detachment force to fresh fruit weight (Ng^{-1}), values above 3 make fruit detachment more difficult (with greater difficulty in achieving harvest percentages above 80–85%), while values around 2 make it easier [55]. Depending on the cultivar, mature olive fruits have a wide weight range, mostly between 1 and 15 g, requiring a fruit removal force of 800–1000 g (10 N) [16]. This force decreases significantly as the fruit ripens and at a slower rate thereafter. However, although fruit weight and removal force can be directly measured and the ratio between the two can be calculated, fruit colour is often considered to be the key parameter on which to base harvesting, especially for table olives [75,76].

In terms of clamping, the trunk shaker can work on diameters of more than 80 cm. The power required for this operation is around 60 kW for tractor-mounted machines and up to 100 kW for self-propelled machines. There are two main types of tree shaker, depending on the type of clamping: on the trunk or the branches. The main difference is in the power required: lower for application to the branches, higher for application to the trunk. The increase in power developed depends on the size of the eccentric masses that generate the vibration. This increases the weight of the shaker, which can reach 600 to 800 kg [51]. For these reasons, manufacturers have increasingly turned to shakers similar to high-powered shakers but equipped with vibrating heads of smaller masses, usually varying between 200 and 300 kg. Reducing the weight of the cylinder head makes it possible to decrease power losses due to less mass in oscillation and thus increase the rate of power, delivered by the drive unit distributed to the tree to be shaken. In large shakers, much of the energy, on the other hand, is used to displace the header mass. Some widespread use has also been found for some shakers with smaller mass heads (80–150 kg) in which the effectiveness of action is determined more by the amount of vibratory energy supplied to the plant than by the frequency vibration.

Trunk shakers require powerful motors to drive them, but have the advantage of fast action; the vibration frequency is high (3000 beats min^{-1}) with modest amplitudes (0.005 m). On the other hand, branch shakers require less energy, but are less efficient than the previous ones; the vibration frequency does not exceed 1200 beats min^{-1} and the amplitudes of the vibrations vary up to 0.05 m [43].

Another important objective was to reduce motion transmission losses by bringing the centre of vibration closer to the axis of the tree and using cushions that would expose a large contact surface area with the bark of the olive tree and allow good motion transmission without creating damage. Under the most suitable conditions, the working capacity of trunk shakers can reach 20–50 plants $hour^{-1}$, with productivity about 5–6 times higher than that of harvesting systems with mechanical harvesting aids [42,74]. The most efficient harvesting sites use shaking machines and nets previously spread on the ground at the base of the trees to catch the product. The number of nets used varies, generally between four and six, and they require a large number of workers to move and empty them, which has a significant impact on both labour use and site operating times [51]. In general, the time required for net placement exceeds that of the corresponding shakers by 20–60%, confirming that the complementary operations (which follow the removal of the fruit from the plant) limit the labour productivity of the harvesting site, which is on average around 3–4 trees $worker^{-1}$ [77].

In the last two decades, a further advance in the rationalisation of harvesting time has been the introduction of trunk shakers equipped with built-in reversed umbrella interceptors, which, by avoiding the use of traditional nets, allow significant labour savings and higher labour productivity (Figure 7). The function of the inverted screen is to embrace the tree at trunk level, catching the falling olives (within a maximum diameter of 8 m), which end up in a metal box placed at the base of the screen itself, with an average capacity of 400 kg, where the product is temporarily stored until it is filled. At rest, the screen remains closed at the sides of the vibrator, while during use it is opened by employing a hydraulic system. Emptying into special containers is carried out with the screen closed, by tilting the container onto the opening of a sluice that allows the olives to flow out. All movements are hydraulically controlled and only one operator is needed; a second worker, assigned to the trailer in which the olives are unloaded, can also be used to assist the machine operator in various manoeuvres. When using a trunk shaker equipped with semi-mechanised wrapping nets, the planting distance on the row must not be less than 5 m so as not to hinder the movement of the machine.



Figure 7. The top trunk shaker is equipped with a reversed umbrella mounted on a tractor. Below is a self-propelled trunk shaker with a closed and open reversed umbrella (on the (**left**) and the (**right**), respectively).

The productivity of the harvesting area can reach significantly higher values with the introduction of mechanised interceptors instead of nets [46]. The use of mechanised interceptors is only possible in the presence of regular planting distances and small tree sizes. One of these interceptors, the semi-mechanised wrap-around net, consists of a rectangular frame with two or four wheels, fitted laterally with two longitudinal rollers, parallel to the direction of travel of the tractor, around which two nets are wrapped; each of which can be stretched manually by four workers under the canopy of two trees. The nets are then unwound mechanically on rollers and the olives are emptied into the machine's hopper. With such an interceptor, combined with a shaker, the number of workers required is reduced to six, and an average productivity of 6–7 trees hour^{-1} per worker can be achieved, almost double the productivity of traditional nets [15].

3. Applications of Trunk Shakers in Olive Growing

From the beginning of the 2000s to the present day, several research projects (the following section summarises the research carried out) have been carried out with field trials to improve the use of mechanical harvesting with trunk shakers in olive growing and to define possible solutions to problems relating to a possible reduction in labour and harvesting time, the increase in harvesting efficiency (defined as the ratio between mechanically harvested olives and the total number of olives present on the canopy), the reduction in damage to trees, etc. Ideally, the research carried out should have three objectives: tests to verify the performance of both tractor-mounted and self-propelled trunk shakers; vibration tests to improve machine performance; and tests on trees of different varieties, sizes, planting distances, and pruning management.

Reviewing some of this research, Zion et al. [78] compared a unidirectional trunk shaker, a circular vibrating trunk shaker, and a grape harvester to evaluate different harvesting options in Israeli olive groves. The first shaker is tractor-mounted; the shaker arm is extended towards the tree and the trunk is gripped, activating the eccentric masses for shaking. The second shaker is also tractor-mounted but has a long conveyor belt for wrapping nets with olives. In terms of performance, no significant difference was found between the two shakers, and, in any case, their use did not lead to a reduction in the number of workers (equipped with long sticks to increase the effect of the shaker) needed to maintain high yields of olives.

The possibility of reducing the number of workers employed at the harvesting site (while maintaining high yields) has also been addressed by Amirante et al. [77]. Harvesting trials were conducted in high-density orchards to compare the results of different harvesting methods, including the use of trunk shakers combined with manually moved nets, mechanical interceptors, and inverted umbrellas. The authors looked at the amount of time the machines were used in the moving, hooking, unhooking, and shaking phases of each trunk. The authors also considered the time spent when the machines were not in use during the harvesting and moving of the olive interceptors. The results of the trials showed that the best performance in terms of harvesting efficiency was obtained by using the trunk shaker equipped with a reversed umbrella, with an average harvesting time of 1.33 min per tree and a working capacity of 45 trees h^{-1}.

Famiani et al. [15] aimed to test and evaluate different types of mechanical harvesting systems for large old olive trees, 60–100 years old and 7–9 m high, with a canopy volume of 140–360 m^3. The three mechanical harvesting trials used were (1) a tractor-mounted mechanical beater supported by two hand-held pneumatic combs; (2) a self-propelled trunk shaker; and (3) a tractor-mounted mechanical beater supported by a reversed umbrella mounted on another tractor. The combined use of the reversed umbrella and the mechanical beater increased productivity by reducing labour requirements (two workers) and allowed the mechanisation of both fruit removal and harvesting.

A comparison of different harvesting systems, manual and mechanical, was carried out by Sola-Guirado et al. [43], who studied the response of traditional olive trees to different harvesting systems by testing harvesting efficiency, debris production, vibration patterns, and the location of unattached fruits in the canopy. In addition to manual harvesting systems using sticks, handheld branch shakers, and handheld comb shakers, a tractor-mounted orbital trunk shaker and a tractor-drawn citrus canopy shaker were used. Manual or handheld harvesting (98%) achieved the highest harvesting efficiency. However, the efficiency obtained with the trunk shaker was high (90%) and mechanical shaking produced less debris than manual harvesting with sticks or long poles (8.5% of the total detached fresh fruit mass) achieved by Cicek et al. [79].

Colmenero-Martinez et al. [80] developed an automatic trunk detection system to be implemented on a trunk shaker designed to work in intensive olive groves. The automatic system, through an infrared sensor, mounted on a trunk shaker coupled to a tractor, consists of a control algorithm, control logic, and a display to automate the trunk detection. During the tests, the following variables were evaluated: colour, material, diameter, and location of the target within the sensor's field of view, with a success rate of 91%. The automatic detection system, in addition to improving work capacity, could reduce the problem of debarking due to human error. The ability and experience of the operator to drive the harvester and clamp the trunk shaker without causing damage, as well as the physiology and geometry of the plant, often influence the work efficiency of the machine [81] (Figure 8).



Figure 8. Self-propelled shaker in action on olive trees of different ages and dimensions: young (**on the left**), medium-aged (**in the centre**), and old (**on the right**). Note the differences in the capacity of the gripper to wrap around the trunk.

Bernardi et al. [81] aimed to analyse the dynamic response of olive trees to the vibrations of the trunk shaker, testing two different materials for the head clamp pads: vulcanised rubber and PVC granules embedded in a layer of elastic material. Field tests were carried out using an orbital trunk shaker and measurement of forced vibrations using a triaxial piezoelectric accelerometer (Figure 9). The results did not show any noticeable advantages in terms of harvesting efficiency, but the use of this material may be more appropriate in early harvesting conditions to reduce the likelihood of trunk damage.



Figure 9. An accelerometer placed on the olive tree's trunk.

Other researchers have studied [82–86], both in the laboratory and in the field, the vibrations produced by trunk shakers, in particular the frequencies and duration of the vibrations that should be transmitted to the olive tree to obtain the highest percentage of falling fruit, while at the same time protecting the trees from bark damage and/or branch breakage. In these cases, the main parameters, vibration and frequency, are measured by attaching accelerometers to the head shaker and on tree trunks and branches.

Leone et al. [82] used an orbital trunk shaker to evaluate the optimal frequency, acceleration, and shaking time that could maximise the percentage of fruit detachment. To monitor the second parameter according to the different shaking times and vibration frequencies, a reversed umbrella was placed to harvest the detached olives. The best vibration frequency to obtain a higher fruit removal rate was between 23 and 27 Hz, depending on the cultivar (Frantoio, Picholine, Leccino, and Cima di Melfi), and the three-dimensional acceleration value was between 70.41 and 99.25 m s^{-2}, with an optimal shaking time of less than 10 s.

Castro-García et al. [83] analysed the dynamic behaviour of trunk shakers to detect resonance phenomena that cause bark damage in olive trees during harvesting. Resonance occurs during trunk vibration when the excitation frequency is close to one of the natural frequencies of the different organs or the whole tree [84]. Therefore, the compression of the dynamic behaviour of the excited mode on the tree during vibrational action is considered important for the design of proper harvesting practices. To this end, the authors analysed the modal parameters (natural frequency, damping ratio, and mode shape) of different commercial orbital shakers commonly used by olive growers in Spain, testing them according to size, trunk clamping system, and tractor suspension system. They found that the higher acceleration produced by the trunk shaker in resonance caused significantly increased damage to the tree, and the resonance phenomena were observed at different frequencies for each trunk shaker.

Castro-García et al. [84] deepened the dynamic analysis of olive trees in the trunk shakers frequency range in intensive orchards. The test was performed by shaking trees, distinguished based on trunk and canopy diameter, with an electromagnetic shaker, using an extensometer load cell to measure the applied force, while the acceleration signals were measured using a triaxial accelerometer. The results identified the first two modes of vibration of trees with natural frequencies of 20.2 and 37.7 Hz. The first two modes are particularly important as they account for approximately 80% of the tree's response.

D'Agostino et al. [85] focused on understanding what happens to the stem–fruit system when subjected to the vibrations of a trunk shaker generating multidirectional vibrations. Vibrations were measured both on main and secondary branches by placing several accelerometers at varying distances. The results showed how vibrations spread over the shaft structure following preferential directions and not uniformly.

Bentaher et al. [86] also studied the dynamic response of the Tunisian cultivar Chemlali to two types of trunk shaker (orbital and multidirectional, respectively) by proposing a finite element numerical modelling in which the tree architecture data were used to reconstruct a 3D elastic structure using the numerical modelling software COS-MOSM-(Geostar). The response of the tree at the level of the olives' peduncles allowed the evaluation of the response of the model to the two types of trunk shaker and two points of excitation force (trunk and primary branch). Similarly, Hoshyarmanesh et al. [72] determined the optimal parameters of mechanised olive harvesting with trunk shakers in pruned orchards to maximise performance and productivity. For this purpose, the authors used finite element analysis to simulate the harvesting productivity of a real 3D structure. A 3D model of a medium-sized tree was created using Autodesk Inventor Pro and consisted of branches, main branches, sub-branches, and olive trunk/branch joints. Several parameters, such

as the effect of vibration frequency, loading direction (linear and orbital), temperature, and loading height on olive trunk joint failure were simulated and analysed. The results showed that the maximum quantity harvested was over 90% with a frequency of 20 Hz to productivity equal to 293 kg h^{-1} (12 tree h^{-1}), highlighting the usefulness of accurate 3D analysis in mechanised olive harvesting.

Similarly, other authors [62,87] aimed at optimising the design parameters of trunk shakers, highlighting the need to consider the agronomic conditions (tree architecture, canopy density, pruning), the machine operating parameters (clamping position, clamping force), and the interaction between all these parameters, since they significantly influence the harvesting process. With regard to pruning as a determining factor in the efficiency of transmitted vibrations, Tombesi et al. [73] tested a tractor-mounted trunk shaker on trees pruned at different intervals (annually, every two years, and after three years) and different intensities. The trunk shaker gave an average fruit removal of 87% and higher values (93%) for olive trees pruned annually or every two years with medium and heavy intensity, and for those pruned heavily every three years.

The research by Camposeo et al. [88] aimed to determine the transmission of vibrations on large old trees before and after pruning. The authors considered that pruning (by removing hanging branches and branches forming dichotomies) could improve the performance of mechanical harvesting. Tests were carried out using two different modes of vibration application (using a trunk shaker and hitting the tree with a steel rod at 60 cm from the ground).

Tombesi et al. [63] demonstrated the importance of removing the internal suckers to improve vibration transmission and harvesting effectiveness. Tests carried out in an intensive olive orchard (cultivars Leccino and Frantoio), using two orbital and multidirectional trunk shakers, showed an increase in harvesting effectiveness from 83.4% to 95.6% compared to trees without internal suckers, and the maximum acceleration transmitted to the trunk and branches increased by 33.1% and 46.6%, respectively.

Sola-Guirado et al. [62] investigated the tree's response to vibrations generated by the trunk shaker (multidirectional), taking into account the response of the underground zone. For this scope, the authors placed triaxial piezoelectric accelerometers on the trunk shaker head, in the aerial zone of the tree and the underground zone; two sensors were placed at 1/3 and 2/3 of the coarse root length, corresponding to 0.38 m and 0.85 m from the trunk, respectively. The results showed that the vibrator produced a vibration of 18 Hz and an acceleration of approximately 77 ms^{-2}. It was also shown that the dynamic resistance was lower near the trees (both vibrated and non-vibrated) and higher between the trees (at 1.60 m and 2.80 m from the tree).

Ghonimy et al. [89] tested an analytical methodology to study the effect of different parameters on the performance of a trunk shaker: shaking displacement, fruit detachment force, fruit mass, trunk length, damping ratio, unbalanced mass of the tree shaker and excitation shaking frequency. The trunk shaker worked on 12-year-old olive trees (cv. Picual), selecting six different trunk diameters (0.78, 0.84, 1.01, 1.43, 1.58 and 1.86 m) and five levels of attachment height (from 0.4 to 0.8 m). The machine was operated at a frequency of 18 Hz and 12 s for tree. The results showed that the theoretical shaking power was 12.8 kW (the actual required shaking power ranged from 7.1 to 17.8 kW), with an average of 12.6 kW considered as a function of variations in trunk diameter and attachment height.

Some research has focused on harvesting trials carried out on different cultivars in young and old olive groves, measuring harvesting efficiency with trunk shakers and the force required to detach the fruit. Visco et al. [90] tested the efficiency of mechanical harvesting and fruit detachment force on the Italian cultivars 'Frantoio', 'Leccino', and 'Moraiolo' on 60–70-year-old plants, in different harvesting periods, to determine fruit detachment force,

oil content, and the efficiency of mechanical harvesting with trunk shakers. The best results in terms of harvesting efficiency were obtained in 'Frantoio' and 'Moraiolo' (over 80%), with a working capacity of 11–21 trees per hour, depending on the shape of the olive canopy and the arrangement of the branches. The same authors [91] carried out a similar test on young trees (11–12 years old) and obtained harvesting efficiencies of over 90% for the cultivars Leccino, Frantoio, and Pendolino with a working capacity of 30–40 trees per hour.

Other similar tests were carried out by Blanco-Roldán et al. [53], who studied the detachment process of olive fruits by trunk shaking in traditional plantations (trees 60–65 years old, at a distance of 12 m, under rainfed conditions). The authors focused on the influence of the period within the harvesting season, the cultivar, the number of shaking repetitions, and the shaking time on the removal efficiency of the fruits. This study led to the following conclusions: a time between 10 and 13 s is necessary to achieve the removal of 90% of the fruits susceptible to collection by shaking the trunk, while times longer than 16 s, using one continuous and two consecutive vibrations, do not increase the removal efficiency. In addition, vibrations induced in two successive short periods were more effective than continuous vibration only at the beginning and middle of the harvest, but not at the end.

Farinelli et al. [55] tested trunk shakers considering the differences in canopy density, growth habit, tree vigour, fruit detachment force, and fruit weight of several cultivars (Arbequina, Frantoio, Kalamata, Leccino, Manzanilla de Sevilla, Moraiolo, Picholine, Picholine Marocaine, and Sorani). The results clearly showed a linear relationship between the ratio of fruit detachment force/fruit weight and harvesting efficiency. This ratio represents a useful harvest index for planning the best harvest in intensive olive orchards. Farinelli et al. [92] also evaluated several international cultivars (Arbequina, Kalamata, Leccino, Manzanilla de Sevilla, Picholine, Picholine Marocaine, and Sorani) based on their adaptation to environmental conditions and their response to trunk shaker harvesting. The detachment force was measured on about 50 olives using a dynamometer and the percentage of fruit with a detachment force of less than 3 N was determined. On the other hand, the yield was determined by weighing the harvested olives and the olives left on the tree. The results showed that the percentage of mechanical harvesting was very high (91%) in Kalamata, Sorani, Picholine, and Leccino and high (83%) in Picholine Marocaine and Manzanilla.

Research and field trials on trunk shakers have covered not only orchards and cultivars designed to harvest olives for olive oil production but also table olives. One of the main challenges for table olive growers interested in switching to mechanical harvesting is to reduce the damage to the fruit during harvesting. Of particular importance in table olive production are all those components of the production process, both genetic and environmental, as well as cultivation techniques, which can enhance specific qualities of the fruit. Due to consumer preferences, severely damaged olives cannot be marketed [93]. Therefore, to develop strategies to reduce olive damage, it is important to identify the main factors that influence the susceptibility of fresh fruit to damage during harvesting [94,95]. Both the impact of the machine on the tree and the stage of ripeness at harvest are important. Of course, varietal differences also affect fruit characteristics such as heat resistance, lower disease susceptibility, size, yield, and even impact resistance [96–98]. As far as mechanical harvesting as a cause of damage is concerned, the solution is to reduce the frequency of vibration, thereby preserving the integrity and fruit quality.

With regard to the susceptibility of olives to mechanical damage, a distinction can be made between drupes for olive oil and table olives. As reported by Jiménez-Jiménez et al. [99], in table olives harvested with trunk shakers in intensive olive groves, mechanical harvesting produced a level of bruising 12 times higher than that obtained by manual

harvesting. More than half of the damage to the olives was caused by the impact of falling branches. Therefore, when designing harvesting systems for table olives, special attention must be paid to fruit–tree interaction, avoiding pruning canopy shapes, and training systems that could increase fruit impact during harvesting [100]. These conclusions were confirmed by Homayouni et al. [101], who emphasised that, due to the damping effect of the olive canopy, trunk shaking must be of higher intensity and longer duration than in nut trees to achieve an acceptable fruit removal rate. These higher frequencies cause more fruit damage.

On the other hand, in drupes for olive oil, several studies have been carried out to evaluate the effects of different harvesting systems on the basic qualitative parameters of virgin olive oils, such as free acidity, peroxide value, and spectrophotometric absorptions in ultraviolet [102–105]. The quality of the oils extracted from the harvested olives met the requirements set by European law for extra virgin olive oils [42,46,74,106], even if, from a sensorial point of view, trunk shakers with a reversed umbrella can be a more efficient solution for mechanical harvesting in southern Italy to avoid the scent of oil obtained from fruits collected with earth.

The objective of the study conducted by Castro-Garcia et al. [56] was to identify potential solutions to enhance the mechanical harvesting of table olives with the use of diverse orbital trunk shakers. The experiments were performed in three distinct orchard types: a traditional orchard, a traditional orchard adapted to mechanical harvesting, and an intensive orchard (cultivar Manzanilla). The results indicated that the mean harvesting efficiency with trunk shakers was 74%. Tests for achieving harvesting efficiency above 85% necessitated an acceleration of 183.4 m s^{-2} at a frequency of 28.1 Hz, but this resulted in increased damage to the fruits, with the damage being 3.5 times greater than that which would be caused by manual harvesting.

In a study by Homayouni et al. [101], the efficacy of a canopy shaker and a trunk shaker in harvesting table olives was compared. The canopy shaker comprises an eccentric wheel equipped with a series of rods that contact the tree branches, thereby striking and shaking the entire canopy and facilitating the removal of fruit [107]. A comparison of the vibration frequency of the two harvesters revealed that the canopy shaker generated a lower vibration frequency (3.5 Hz) than the trunk shaker (15.5 Hz) in small boughs and higher amplitudes, which resulted in less damage to the fruit. The findings indicated that both machines exhibited comparable low harvest efficiencies and no significant differences. However, the combination of both shaking methods demonstrated a notable improvement in harvest efficiency (75% being the optimal result) and a discernible enhancement in fruit quality.

Similarly, Zipori et al. [93] conducted a comparative analysis of manual and mechanical harvesting techniques, evaluating the efficacy of trunk and canopy shakers on four distinct cultivars of table olives (Manzanilla, Hojiblanca, Souri, and Nabali Mouhassan). During the field trial, the trunk shaker was employed in isolation, in conjunction with rod beating, and with the application of an abscission agent, as illustrated by Birger et al. [108]. The most optimal harvest efficiency was achieved through the utilisation of the trunk shaker and rod beating (80–95%), with the final product quality of olives belonging to the varieties Hojiblanca, Souri, and Nabali Mouhassan exhibiting a similarity to those manually picked.

In a study conducted by Ferguson et al. [109], a trunk shaker, adapted from pistachio and prune harvesting machinery, and a prototype canopy contact harvester, adapted from wine grape harvesting machinery, were tested in several olive groves, including one that had been mechanically pruned (Manzanilla). The results of the harvesting efficiency trials, which yielded an average of 80–90%, demonstrated that the adaptation of olive groves with mechanical pruning did not reduce the average annual yield. Furthermore, it was shown

that these groves can be harvested mechanically at competitive costs and speeds with those of manual harvesting.

Tables 1 and 2 show the main characteristics of the trunk shakers used in the reviewed research. Table 3 shows photos and power requirements of some trunk shakers (where the model used could be traced).

Table 1. The main characteristics of the applications of tractor-mounted trunk shakers in the research cited in this review.

Reference	Model	Type of Vibration	Anchor Point	Auxiliary Equipment
[78]	Dotan DT10 Tornado T3	Unidirectional Orbital	Trunk Trunk	Sticks Nets Interceptor machine
[77]	-	-	Trunk	Nets Interceptor machine Reversed umbrella
[43,99]	NOLI VBFHG	Orbital	Trunk	Nets
[80]	Prototype	Orbital	Trunk	-
[82]	Mistral D11	Orbital	Trunk	Reversed umbrella
[83]	-	Orbital	Shaker post system (simulation)	-
[84]	-	-	Trunk	-
[86]	-	Orbital/Multidirectional	Trunk/Branches	-
[72]	-	Unidirectional/Orbital	Trunk (simulation)	-
[87]	Prototype	-	Branches	Nets
[73]	-	Orbital/Multidirectional	Trunk	Nets
[88]	-	-	Trunk (simulation)	-
[66]	Prototype	Orbital/Multidirectional	Trunk	-
[85]	Verdegiglio VMA88	-	Trunk	-
[89]	FSI Feucht Obsttechnik	-	-	-
[90,91]	Tornado T3	Orbital	Trunk/Branches	-
[53]	Halcon M203	-	Trunk	-
[68]	-	-	Trunk	-
[61]	-	Orbital	Trunk	-
[101]	-	-	Trunk	Canopy shaker
[93]	Dotan DT10	Unidirectional	Trunk	Rod beating

Table 2. The main characteristics of the applications of self-propelled trunk shakers in the research cited in this review.

Reference	Model	Type of Vibration	Anchor Point	Auxiliary Equipment
[15]	SICMA	-	Branches	Nets
[58]	Sha Dedalus	Multidirectional	Trunk/Branches	-
[92]	-	-	Trunk	Reversed umbrella
[109]	-	-	Trunk	Canopy contact harvester

Table 3. Images and power requirements of the main used trunk shakers cited in this review.

Model Manufacturer [Reference]	Image	Type Power Requirement
F3 SICMA (Italy) [15]		Self-propelled 88.3 kW
VBFHG NOLI (Spain) [43,99]		Tractor-mounted 77.8 kW
D11 Mistral (Italy) [82]		Tractor-mounted 48 kW
VMA88 Verdegiglio (Italy) [85]		Tractor-mounted 50 kW
Dedalus De Masi (Italy) [58]		Self-propelled 74.5 kW
FSI Feucht Obsttechnik (Germany) [89]		Tractor-mounted 60 kW

Table 3. *Cont.*

Model Manufacturer [Reference]	Image	Type Power Requirement
M203 Halcòn (Spain) [53]		Tractor-mounted 76 kW
Tornado T3 Berardinucci (Italy) [78,90,91]		Tractor-mounted 35–45 kW

4. Recommendations and Future Perspectives

Trunk shakers are a commonly used harvesting machine for olives, serving as the primary method for detaching fruit. Today, there is a wide range of commercial models available, both tractor-drawn and self-propelled, with different pickup systems, geometry, pickup materials, clamping force of the clamps, etc. Moreover, there has been significant advancement in the components of trunk shakers, particularly in the domains of mechanics, hydraulics, and control systems [80]. However, their effectiveness is still closely related to several factors linked to the crop (plantation age, variety, phenological state, irrigation, fertilisation, pruning). Such machines find their optimal range of use in intensive olive groves with regular planting patterns and densities of 500–700 trees per hectare (Figure 10).



Figure 10. Intensive olive grove (**on the left**); trunk shaker at work in the grove (**on the right**).

The cultivar plays a significant role in the mechanical harvesting yield of trunk shakers, due to factors such as the length of the peduncle, the presence of single or multiple fruits per inflorescence, and other characteristics like the shape and elasticity of the branches, the upright or pendulous habit of the tree, and the simultaneous or delayed ripening of the fruit [92].

To facilitate harvesting with shakers, the trunk of the olive tree must be more than 10 cm in diameter [110], and a distance of 3 m between plants if sheets or nets are employed

as interceptors; a distance of 4 metres is advised when utilising a trunk shaker in conjunction with a reversed umbrella.

The canopy must also be considered. Training difficulties in clamp attachment can be observed due to the setting of the first branch stage [111,112]. A form with a rigid structure, regular development of the branch axis, and thinning of the canopy has been shown to increase harvest yields [85,88]. Reciprocal adaptation between machine and plant is also necessary because the efficacy of the shaking machines is also contingent upon the geometric characteristics of the plant. The harvesting period can influence the percentage of product detached from the tree and the risks of damage to the vegetation to the force of detachment and the size of the olives. The most suitable time interval for efficient mechanised harvesting can be derived from the ripening calendar of each cultivar, which is known.

Trunk shakers can be used early, on 6–8-year-old trees, to up to 60–70 years if the trunks remain healthy and regular, as decayed wood dampens the transmission of vibrations and does not guarantee sufficient mechanical resistance at the anchor point [17]. On one hand, the use of such machines is essential in modern intensive orchards. However, improper execution of the vibration operation, such as excessive timing, incorrect pickup, wear of attachment materials (Figure 11), oversized heads (Figure 12), etc., or the occurrence of certain conditions, such as early harvests when the tree is in a very active vegetative state, or harvests conducted after rainy days, can lead to a high risk of bark stripping on the trees (Figure 13), sometimes resulting in significant damage. Olive bark resistance to radial stresses is 34–41 kg cm^{-1} and to tangential stresses 10–11 kg cm^{-1} [113]. Weak and partially devitalised branches are also susceptible. The fall of leaves is caused by high-frequency vibrations, especially above 40 Hz and of long duration, especially in bare canopies [17]. In the root, both the angle of the first-order lateral roots and the biomass of the stump were significantly increased by the mechanical harvesting method [114]. The machine's performance heavily relies on the operator's skill, particularly in preventing issues like trunk debarking, incorrect shaking parameters, or safety concerns.



Figure 11. Attachment materials and their wear level.

It is not recommended to use prolonged vibrations (more than 10 s) [53,115], and if the tree's yield and the fruit drop percentage require it, it is better to perform two or, at most, three short vibrations rather than one long vibration, as this strategy improves the fruit drop percentage and reduces the likelihood of damaging the trunk. The focus point remains the need for the plants to be structurally set up to facilitate the insertion of the vibration head and the movement of the tractor or self-propelled machine between the plants, which is essential for the success of this harvesting system. This highlights the need for modern orchards, structurally designed to promote the attachment of the head, the development of vibrations, and their maintenance, along with frequent pruning and sucker

removal operations [116]. This paradigm is taken to the extreme in modern super-intensive orchards, where it is no longer the machine that must adapt to the plant, but rather the plant that must adapt to the machine [38].



Figure 12. Difficulty in using oversized heads during work.



Figure 13. Bark stripping on the trunk caused by the shaker head.

In traditional orchards, with very wide or irregular planting layouts, dense canopies, or centennial trees, it is indeed difficult to attach to the trunk, especially in ancient orchards (Figure 14). If the canopy is not properly managed, it becomes challenging to secure an attachment on the branches, which in these cases presents itself as the only viable solution (Figure 15). As for the canopy, trunk shakers have shown good performance with canopy volumes of up to 40–50 m^3 [17], which is easily achievable with almost all cultivars. Canopies should be open, well exposed to light, with 3–4 diagonal branches, without changes in direction, and with stiff secondary and tertiary branches, well covered with fruiting branches and with olives localised in the medium-to-high part of the canopy. The strength of the fruit set is an important factor and depends on the variety and the time of harvest. However, considering the ratio of this force to the weight of the fruit (Ng^{-1}): if it is around 2, good yields are obtained, while values above 3 cause more difficulties [17].

Also, the possibility of harvesting olives by machine and obtaining high-quality olive oil from traditional groves would allow the preservation of historic agricultural landscapes of significant social and environmental importance, the value of which extends beyond that of the product itself [117]. The enhancement of the road network and the expansion of contracting services for small and medium-sized agricultural enterprises, which frequently lack the financial resources to mechanise harvesting independently, could prove an effective solution to this problem [118].



Figure 14. Example of trees in an ancient olive grove.



Figure 15. Example of issues in attaching the trunk shaker to the branches of ancient olive trees.

In consideration of the foregoing, a SWOT analysis is reported (Figure 16). The strengths make the trunk shaker a popular choice for modern olive production, especially for large-scale farms. Despite the weaknesses, many commercial olive growers find that the advantages of using a trunk shaker outweigh the disadvantages, especially in large orchards. By taking advantage of these opportunities, olive growers can increase their competitiveness in the marketplace, improve their operational efficiency, and build a more sustainable future for their orchards. Finally, threats underline the importance of careful consideration when adopting trunk shakers, as growers need to balance the costs, benefits, and potential risks associated with using this technology in their specific orchard environment.

From this perspective, the field of olive harvesting requires more automation to overcome the current limitations. There is no single strategy suitable for all types of orchards [80]. The coexistence of plants of different ages and training systems, farm management factors, and territorial and socio-economic factors make the cost of olive oil highly dependent on this factor. In many cases, the strong attachment of olive growers to their traditions is still the reason for the maintenance of olive groves, and they do not consider the importance of research or investment in machinery and equipment, which are essential for the necessary productive conversion.

For the near future, it is difficult to imagine a completely alternative system to trunk shakers. In recent years, there has been a concerted effort to address this issue by revisiting and updating the concept of machines such as Oli-Pickers [119,120], leading to the development of canopy shakers that apply vibration directly to the fruit-bearing branches [107–121]. However, the problems related to the dimensions of these machines and the management of the canopy are not secondary. In addition, Sola Guirado et al. [122] developed an over-the-row harvester based on the concept of simultaneous harvesting systems which can

work simultaneously: a trunk shaker and two canopy shakers. These systems require tree training adapted to the type of machine to improve efficiency and reduce damage.



Figure 16. Trunk shaker SWOT analysis.

Furthermore, partial mechanical harvesting with alternative machines, such as canopy contact or side-by-side trunk shakers was evaluated by Marino et al. [22], in those systems that can be called 'pedestrian olive systems', for marginal areas and moderately sloped hills (up to 15%), where mechanisation is not possible. Side-by-side trunk shakers consist of two machines with inclined, padded frames that traverse either side of a row of trees to be harvested. One machine has a shaking head located under the catching frame. This catching frame overlaps the trunk and delivers the fruit to a conveyor system carried by the other machine, which also carries a catching frame, elevator, blower, and bin or bulk carrier.

5. Conclusions

Introducing new technologies to improve olive harvesting could be a strategic need for the modernisation and sustainability of the sector. Ongoing experimental progress suggests the potential for computer vision systems, robotics, automation and electrification in agriculture, though in-field automation in olive orchards, to date, remains limited despite continuing developments [80]. Computer vision systems face challenges in identifying fruit, shapes, sizes, oil contents, colours, and position [123]. Helping farmers make decisions at harvest time is essential. The use of advanced modelling techniques based on artificial intelligence and digital device technology can help achieve this goal [124]. Robotic systems could guarantee significant progress in autonomous collection [69]. As reported by Zheng et al. [125] and Sanchez-Cachinero et al. [52], the use of a robotic system, e.g., to control shaker head movement, could also avoid the human factor, reducing losses of time and fuel. Bringing automation to agriculture would introduce advanced technology, and soon, sensors initially designed for other sectors could be the first step toward implementing robotic harvesting systems. In automation, electrification can play a key role, following the trend in the automotive industry towards the development of hybrid and battery–electric on-road vehicles [126]. In addition to the benefits of fuel savings and emission reduction, electrification can also lead to a reduction in maintenance costs due to the decreased mechanical complexity of the machines themselves.

Laboratory research often fails to account for the full range of complexities found in real-world conditions. The challenge for the future is to successfully integrate detection and control algorithms, together with equipment, into practical environments that will allow farmers to monitor their groves with unprecedented accuracy, ensuring that they are harvested at the optimum time. However, it is also clear that tradition will never be completely left behind. The olive tree is a symbol of resilience, a mirror of the farmer who engages in olive cultivation, whether driven by passion or as their primary business.

Author Contributions: Conceptualization, B.B.; writing—original draft preparation, G.M., M.S. and B.B.; writing—review and editing, G.M., M.S. and B.B.; visualisation, G.M., M.S. and B.B.; project administration, B.B. All authors have read and agreed to the published version of the manuscript.

Funding: This research was partially realised in the framework of the project 1381058-R "Optimización de la tecnología de vibración para la mejora de la eficiencia de la recolección mecanizada de árboles frutales". Proyectos de I + D + i en el marco del Programa Operativo FEDER Andalucía 2014–2020 and "Dottorato di Ricerca in Scienze Agrarie, Alimentari e Forestali (XXXIX ciclo) dell'Università Mediterranea di Reggio Calabria".

Conflicts of Interest: The authors declare no conflicts of interest.

References

1. Anastasiou, E.; Balafoutis, A.T.; Fountas, S. Trends in Remote Sensing Technologies in Olive Cultivation. *Smart Agric. Technol.* **2023**, *3*, 100103. [CrossRef]
2. Kaniewski, D.; Van Campo, E.; Boiy, T.; Terral, J.F.; Khadari, B.; Besnard, G. Primary domestication and early uses of the emblematic olive tree: Palaeobotanical, historical and molecular evidence from the Middle East. *Biol. Rev.* **2012**, *87*, 885–899. [CrossRef] [PubMed]
3. Besnard, G.; Khadari, B.; Navascués, M.; Fernández-Mazuecos, M.; Bakkali, A.E.; Arrigo, N.; Baali-Cherif, D.; Brunini-Bronzini de Caraffa, V.; Santoni, S.; Vargas, P.; et al. The complex history of the olive tree: From late quaternary diversification of mediterranean lineages to primary domestication in the northern Levant. *Proc. R. Soc. B Biol. Sci.* **2013**, *280*, 20122833. [CrossRef] [PubMed]
4. Zohary, D.; Spiegel-Roy, P. Beginnings of fruit growing in the Old World. *Science* **1975**, *187*, 319–327. [CrossRef]
5. Foscolou, A.; Critselis, E.; Panagiotakos, D. Maturitas Olive oil consumption and human health: A narrative review. *Maturitas* **2018**, *118*, 60–66. [CrossRef]
6. Breton, C.; Terral, J.F.; Pinatel, C.; Médail, F.; Bonhomme, F.; Bervillé, A. The origins of the domestication of the olive tree. *Comptes Rendus Biol.* **2009**, *332*, 1059–1064. [CrossRef]
7. Rallo, L.; Caruso, T.; Diez, C.; Campisi, G. Olive Growing in a Time of Change: From Empiricism to Genomics. In *The Olive Tree Genome*; Springer: Cham, Switzerland, 2016; pp. 55–64, ISBN 978-3-319-48887-5.
8. FAOSTAT. Available online: https://www.fao.org (accessed on 1 June 2024).
9. Servili, M.; Sordini, B.; Esposto, S.; Urbani, S.; Veneziani, G.; Di Maio, I.; Selvaggini, R.; Taticchi, A. Biological activities of phenolic compounds of extra virgin olive oil. *Antioxidants* **2014**, *3*, 1–23. [CrossRef]
10. Finicelli, M.; Squillaro, T.; Galderisi, U.; Peluso, G. Polyphenols, the Healthy Brand of Olive Oil: Insights and Perspectives. *Nutrients* **2021**, *13*, 3831. [CrossRef]
11. Messina, G.; Modica, G. The Role of Remote Sensing in Olive Growing Farm Management: A Research Outlook from 2000 to the Present in the Framework of Precision Agriculture Applications. *Remote Sens.* **2022**, *14*, 5951. [CrossRef]
12. Messina, G.; Modica, G. Twenty Years of Remote Sensing Applications Targeting Landscape Analysis and Environmental Issues in Olive Growing: A Review. *Remote Sens.* **2022**, *14*, 5430. [CrossRef]
13. Fraga, H.; Moriondo, M.; Leolini, L.; Santos, J.A. Mediterranean Olive Orchards under Climate Change: A Review of Future Impacts and Adaptation Strategies. *Agronomy* **2020**, *11*, 56. [CrossRef]
14. Duarte, F.; Jones, N.; Fleskens, L. Traditional olive orchards on sloping land: Sustainability or abandonment? *J. Environ. Manag.* **2008**, *89*, 86–98. [CrossRef] [PubMed]
15. Famiani, F.; Farinelli, D.; Rollo, S.; Camposeo, S.; Di Vaio, C.; Inglese, P. Evaluation of different mechanical fruit harvesting systems and oil quality in very large size olive trees. *Span. J. Agric. Res.* **2014**, *12*, 960–972. [CrossRef]
16. Ferguson, L.; Rosa, U.; Castro-Garcia, S.; Lee, S.M.; Guinard, J.X. Development of Mechanical Harvesting of California Olives. *Hortscience* **2010**, *45*, S21.
17. International Olive Council. *Production Techniques in Olive Growing*, 1st ed.; International Olive Council: Madrid, Spain, 2007.

18. Connor, D.J.; Gómez-del-Campo, M.; Rousseaux, M.C.; Searles, P.S. Structure, management and productivity of hedgerow olive orchards: A review. *Sci. Hortic.* **2014**, *169*, 71–93. [CrossRef]
19. Palese, A.M.; Pergola, M.; Favia, M.; Xiloyannis, C.; Celano, G. A sustainable model for the management of olive orchards located in semi-arid marginal areas: Some remarks and indications for policy makers. *Environ. Sci. Policy* **2013**, *27*, 81–90. [CrossRef]
20. Khan, A.A.; Islam, M.A.; Saad, A.; Raza, S.M.; Ali, I.; Sheraz, K.; Usman, M.; Ali, M.M.; Ali, M. Prospects and Scope of Olive Mechanization: A Review. *Zoo Bot.* **2023**, *1*, 79–93. [CrossRef]
21. Efe, R.; Soykan, A.; Sönmez, S.; Cürebal, I. Quantifying the effect of landuse change on olive tree cultivation in the vicinity of Edremit between 1979 and 2006 using GIS and RS techniques. *Fresenius Environ. Bull.* **2008**, *17*, 696–704.
22. Marino, G.; Macaluso, L.; Grilo, F.; Marra, F.P.; Caruso, T. Toward the valorization of olive (*Olea europaea* var. *europaea L.*) biodiversity: Horticultural performance of seven Sicilian cultivars in a hedgerow planting system. *Sci. Hortic.* **2019**, *256*, 108583. [CrossRef]
23. Roma, E.; Catania, P. Precision Oliviculture: Research Topics, Challenges, and Opportunities - A Review. *Remote Sens.* **2022**, *14*, 1668. [CrossRef]
24. Perujo Villanueva, M.; Colombo, S. Cost analysis of parcel fragmentation in agriculture: The case of traditional olive cultivation. *Biosyst. Eng.* **2017**, *164*, 135–146. [CrossRef]
25. Gómez, J.A.; Sobrinho, T.A.; Giráldez, J.V.; Fereres, E. Soil management effects on runoff, erosion and soil properties in an olive grove of Southern Spain. *Soil Tillage Res.* **2009**, *102*, 5–13. [CrossRef]
26. Brunori, E.; Salvati, L.; Antogiovanni, A.; Biasi, R. Worrying about 'Vertical Landscapes': Terraced Olive Groves and Ecosystem Services in Marginal Land in Central Italy. *Sustainability* **2018**, *10*, 1164. [CrossRef]
27. Modica, G.; Praticò, S.; Di Fazio, S. Abandonment of traditional terraced landscape: A change detection approach (a case study in Costa Viola, Calabria, Italy). *L. Degrad. Dev.* **2017**, *28*, 2608–2622. [CrossRef]
28. Fleskens, L. A typology of sloping and mountainous olive plantation systems to address natural resources management. *Ann. Appl. Biol.* **2008**, *153*, 283–297. [CrossRef]
29. De Gennaro, B.; Notarnicola, B.; Roselli, L.; Tassielli, G. Innovative olive-growing models: An environmental and economic assessment. *J. Clean. Prod.* **2012**, *28*, 70–80. [CrossRef]
30. Guerrero-Casado, J.; Carpio, A.J.; Tortosa, F.S.; Villanueva, A.J. Environmental challenges of intensive woody crops: The case of super high-density olive groves. *Sci. Total Environ.* **2021**, *798*, 149212. [CrossRef]
31. Rallo, L.; Barranco, D.; Castro-García, S.; Connor, D.J.; del Campo, M.G.; Rallo, P. High-density olive plantations. *Hortic. Rev. (Am. Soc. Hortic. Sci.)* **2013**, *41*, 303–383. [CrossRef]
32. Lodolini, E.M.; Polverigiani, S.; Giorgi, V.; Famiani, F.; Neri, D. Time and type of pruning affect tree growth and yield in high-density olive orchards. *Sci. Hortic.* **2023**, *311*, 111831. [CrossRef]
33. Aiello, G.; Vallone, M.; Catania, P. Optimising the efficiency of olive harvesting considering operator safety. *Biosyst. Eng.* **2019**, *185*, 15–24. [CrossRef]
34. Lo Bianco, R.; Proietti, P.; Regni, L.; Caruso, T. Planting Systems for Modern Olive Growing: Strengths and Weaknesses. *Agriculture* **2021**, *11*, 494. [CrossRef]
35. Tous, J.; Romero, A.; Hermoso, J.F.; Msallem, M.; Larbi, A. Olive orchard design and mechanization: Present and future. *Acta Hortic.* **2014**, *1057*, 231–246. [CrossRef]
36. Sola-Guirado, R.R.; Aragon-Rodriguez, F.; Castro-Garcia, S.; Gil-Ribes, J. The vibration behaviour of hedgerow olive trees in response to mechanical harvesting with straddle harvester. *Biosyst. Eng.* **2019**, *184*, 81–89. [CrossRef]
37. Mairech, H.; López-Bernal, Á.; Moriondo, M.; Dibari, C.; Regni, L.; Proietti, P.; Villalobos, F.J.; Testi, L. Is new olive farming sustainable? A spatial comparison of productive and environmental performances between traditional and new olive orchards with the model OliveCan. *Agric. Syst.* **2020**, *181*, 102816. [CrossRef]
38. Giametta, G.; Bernardi, B. Olive grove equipment technology. Straddling trees: Mechanized olive harvests. *Adv. Hort. Sci.* **2010**, *24*, 64–70.
39. Vieri, M. Olive picking tests with a shaker module and a harvesting umbrella, mounted on a rotating platform excavator. *Adv. Hortic. Sci.* **2002**, *16*, 240–245.
40. Vieri, M. Traditional olive crop mechanization in areas with a high landscape value. Results of tests with new olive picking equipment. *Adv. Hortic. Sci.* **2002**, *16*, 235–239.
41. Cetinkaya, C.; Polat, R.; Ozalp, A.F. Investigation of the vibration effect of using single or double eccentric mass in the trunk shakers used in fruit harvesting. *Eng. Sci. Technol. Int. J.* **2022**, *35*, 101228. [CrossRef]
42. Bernardi, B.; Falcone, G.; Stillitano, T.; Benalia, S.; Strano, A.; Bacenetti, J.; De Luca, A.I. Harvesting system sustainability in Mediterranean olive cultivation. *Sci. Total Environ.* **2018**, *625*, 1446–1458. [CrossRef]
43. Sola-Guirado, R.; Castro-Garcia, S.; Blanco-Roldán, G.; Jiménez-Jiménez, F.; Castillo, F.; Gil-Ribes, J. Traditional olive tree response to oil olive harvesting technologies. *Biosyst. Eng.* **2014**, *118*, 186–193. [CrossRef]
44. Castillo-Ruiz, F.J.; Sola-Guirado, R.R.; Castro-Garcia, S.; Gonzalez-Sanchez, E.J.; Colmenero-Martinez, J.T.; Blanco-Roldán, G.L. Pruning systems to adapt traditional olive orchards to new integral harvesters. *Sci. Hortic.* **2017**, *220*, 122–129. [CrossRef]

45. Dag, A.; Kerem, Z.; Yogev, N.; Zipori, I.; Lavee, S.; Ben-David, E. Influence of time of harvest and maturity index on olive oil yield and quality. *Sci. Hortic.* **2011**, *127*, 358–366. [CrossRef]
46. Di Vaio, C.; Marallo, N.; Nocerino, S.; Famiani, F. Mechanical harvesting of oil olives by trunk shaker with a reversed umbrella interceptor. *Adv. Hortic. Sci.* **2012**, *26*, 176–179. [CrossRef]
47. Taiti, C.; Masi, E.; Flamminii, F.; Di Mattia, C.; Mancuso, S.; Marone, E. Does the Harvest Type Affect Olive Health? Influence of the Harvesting System and Storage Time on the Chemical, Volatile and Sensory Qualities of Extra Virgin Olive Oils. *Plants* **2023**, *12*, 3843. [CrossRef]
48. Affeldt, H.A.; Brown, G.K.; Gerrish, J.B. A new shaker for fruit and nut trees. *J. Agric. Eng. Res.* **1989**, *44*, 53–66. [CrossRef]
49. Vieri, M. Progressi della meccanizzazione (nella Olivicoltura), Giornata di studio "Evoluzione in atto per l'Olivicoltura". In Proceedings of the Atti Accademia dei Georgofili; Accademia dei Georgofili: Florence, Italy, 2006; pp. 447–466.
50. Vitali, G. Una nuova macchina per la raccolta delle olive. *Macchine e Motori Agricoli.* **1967**, *XXV*, Giugno.
51. Fiorino, P. *Olea. Trattato di Olivicoltura*; di Media, E.-E.A.N.B., Ed.; Edagricole-Edizioni Agricole di New Business Media srl: Bologna, Italy, 2018; ISBN 978-88-506-4938-9.
52. Sanchez-Cachinero, P.; Luque-Mohedano, R.; Sola-Guirado, R.R. Computational Model for the Dynamic Characterisation of a Trunk Shaker. *Agriculture* **2022**, *12*, 2158. [CrossRef]
53. Blanco-Roldán, G.L.; Gil-Ribes, J.A.; Kouraba, K.; Castro-García, S. Effects of trunk duration and repetitions on removal efficiency for the harvesting of oil olives. *Appl. Eng. Agric.* **2009**, *25*, 329–334. [CrossRef]
54. Alzoheiry, A.; Ghonimy, M.; Rahman, E.A.E.; Abdelwahab, O.; Hassan, A. Improving olive mechanical harvesting using appropriate natural frequency. *J. Agric. Eng.* **2020**, *51*, 148–154. [CrossRef]
55. Castro-Garcia, S.; Castillo-Ruiz, F.J.; Jimenez-Jimenez, F.; Gil-Ribes, J.A.; Blanco-Roldan, G.L. Suitability of spanish "manzanilla" table olive orchards for trunk shaker harvesting. *Biosyst. Eng.* **2015**, *129*, 388–395. [CrossRef]
56. Catalano, P.; Fucci, F.; Giametta, F.; La Fianza, G.; Bianchi, B. Vibration analysis using a contactless acquisition system. In Proceedings of the Sensing Technologies for Biomaterial, Food, and Agriculture (SeTBio) 2013, Yokohama, Japan, 23–26 April 2013; Kondo, N., Ed.; SPIE Digital Library: Bellingham, WA, USA, 2013; Volume 8881, pp. 1–7. [CrossRef]
57. Abdel-Fattah, H.M.; Shackel, K.A.; Slaughter, D.C. Methodology for determining almond shaker displacement and frequency. *Appl. Eng. Agric.* **2003**, *19*, 141–144. [CrossRef]
58. Sola-Guirado, R.R.; Bernardi, B.; Castro-García, S.; Blanco-Roldán, G.L.; Benalia, S.; Fazari, A.; Brescia, A.; Zimbalatti, G. Assessment of aerial and underground vibration transmission in mechanically trunk shaken olive trees. *J. Agric. Eng.* **2018**, *49*, 191–197. [CrossRef]
59. Spatz, H.-C.; Theckes, B. Oscillation damping in trees. *Plant Sci.* **2013**, *207*, 66–71. [CrossRef]
60. Horvath, E.; Sitkei, G. Damping properties of plum trees shaken at their trunks. *Trans. ASAE* **2005**, *48*, 19–25. [CrossRef]
61. Brown, G.K.; Ranch, M.H.; Timm, E.J. Improved Clamp Pad for Trunk Shakers. *Trans. ASAE* **1988**, *31*, 677–682. [CrossRef]
62. Adrian, P.A.; Fridley, R.B. Dynamics and Design Criteria of Inertia-Type Tree Shakers. *Trans. ASAE* **1965**, *8*, 12–14. [CrossRef]
63. Amirante, P.; Catalano, P.; Giametta, A.; Leone, A.; Montel, G. Vibration Analysis of an Olives Mechanical Harvesting System. *Eng. Agric. Food Sci. Agric. Eng. Int. CIGR J.* **2007**, *9*, 1–10.
64. Parameswarakumar, M.; Gupta, C.P. Design Parameters for Vibratory Mango Harvesting System. *Trans. ASAE* **1991**, *34*, 14. [CrossRef]
65. Horvath, E.; Sitkei, G. SE—Structures and Environment: Energy Consumption of Selected Tree Shakers under Different Operational Condition. *J. Agric. Eng. Res.* **2001**, *80*, 191–199. [CrossRef]
66. Tombesi, S.; Poni, S.; Palliotti, A.; Farinelli, D. Mechanical vibration transmission and harvesting effectiveness is affected by the presence of branch suckers in olive trees. *Biosyst. Eng.* **2017**, *158*, 1–9. [CrossRef]
67. Castro-Garcia, S.; Aragon-Rodriguez, F.; Arias-Calderón, R.; Sola-Guirado, R.R.; Gil-Ribes, J.A. The contribution of fruit and leaves to the dynamic response of secondary branches of orange trees. *Biosyst. Eng.* **2020**, *193*, 149–156. [CrossRef]
68. Farinelli, D.; Tombesi, S.; Famiani, F.; Tombesi, A. The fruit detachment force/fruit weight ratio can be used to predict the harvesting yield and the efficiency of trunk shakers on mechanically harvested olives. *Acta Hortic.* **2012**, *965*, 61–64. [CrossRef]
69. Babanatsas, T.; Glavan, D.O.; Babanatis Merce, R.M.; Borzan, M.; Radu, I.; Maris, S.A. Harvesting olive tree using accurate vibrations generated by a robotic system. *IOP Conf. Ser. Mater. Sci. Eng.* **2018**, *393*, 012083. [CrossRef]
70. Thomson, W.T. *Theory of Vibration with Applications*; CRC Press: Boca Raton, FL, USA, 1981; ISBN 9780203718841.
71. Ginsberg, J.H. *Mechanical and Structural Vibrations: Theory and Application*; John Wiley & Sons: Hoboken, NJ, USA, 2001.
72. Hoshyarmanesh, H.; Dastgerdi, H.R.; Ghodsi, M.; Khandan, R.; Zareinia, K. Numerical and experimental vibration analysis of olive tree for optimal mechanized harvesting efficiency and productivity. *Comput. Electron. Agric.* **2017**, *132*, 34–48. [CrossRef]
73. Tombesi, A.; Boco, M.; Pilli, M.; Farinelli, D. Influence of canopy density on efficiency of trunk shaker on olive mechanical harvesting. *Acta Hortic.* **2002**, *586*, 291–294. [CrossRef]
74. Bernardi, B.; Falcone, G.; Stillitano, T.; Benalia, S.; Bacenetti, J.; De Luca, A.I. Harvesting system sustainability in Mediterranean olive cultivation: Other principal cultivar. *Sci. Total Environ.* **2021**, *766*, 142508. [CrossRef]

75. Benalia, S.; Bernardi, B.; Blasco, J.; Fazari, A. Assessment of the Ripening of Olives Using Computer Vision. *Chem. Eng. Trans.* **2017**, *58*, 355–360. [CrossRef]
76. Sola-Guirado, R.R.; Bayano-Tejero, S.; Aragón-Rodríguez, F.; Bernardi, B.; Benalia, S.; Castro-García, S. A smart system for the automatic evaluation of green olives visual quality in the field. *Comput. Electron. Agric.* **2020**, *179*, 105858. [CrossRef]
77. Amirante, P.; Tamborrino, A.; Leone, A. Olive harvesting mechanization systems in high density orchards. *Acta Hortic.* **2012**, *949*, 351–358. [CrossRef]
78. Zion, B.; Bechar, A.; Regev, R.; Shamir, N.; Weissblum, A.; Zipori, Y.; Dag, A. Mechanical harvesting of olives-an operations study. *Isr. J. Plant Sci.* **2011**, *59*, 71–84. [CrossRef]
79. Cicek, G.; Sumer, S.K.; Kocabiyik, H. Effect of different harvest methods on olive yield and work capacity. *Afr. J. Agric. Res.* **2010**, *5*, 3246–3250. [CrossRef]
80. Colmenero-Martinez, J.T.; Blanco-Roldán, G.L.; Bayano-Tejero, S.; Castillo-Ruiz, F.J.; Sola-Guirado, R.R.; Gil-Ribes, J.A. An automatic trunk-detection system for intensive olive harvesting with trunk shaker. *Biosyst. Eng.* **2018**, *172*, 92–101. [CrossRef]
81. Bernardi, B.; Castro-García, S.; Blanco-Roldán, G.L.; Benalia, S.; Fazari, A.; Zimbalatti, G. A comparison between two materials for head-clamping pads of olive tree shakers: First trials. *Acta Hortic.* **2018**, *1199*, 403–408. [CrossRef]
82. Leone, A.; Romaniello, R.; Tamborrino, A.; Catalano, P.; Peri, G. Identification of vibration frequency, acceleration, and duration for efficient olive harvesting using a trunk shaker. *Trans. ASABE* **2015**, *58*, 19–26. [CrossRef]
83. Castro-García, S.; Gil-Ribes, J.A.; Blanco-Roldán, G.L.; Agüera Vega, J. Mode shapes evaluation of trunk shakers used in oil olive harvesting. *Am. Soc. Agric. Biol. Eng.* **2007**, *50*, 727–732. [CrossRef]
84. Castro-García, S.; Blanco-Roldán, G.L.; Gil-Ribes, J.A.; Agüera-Vega, J. Dynamic analysis of olive trees in intensive orchards under forced vibration. *Trees-Struct. Funct.* **2008**, *22*, 795–802. [CrossRef]
85. D'Agostino, A.; Giametta, F.; Giametta, G.; Mauro, S.; Zimbalatti, G. Preliminary tests to assess the dynamics of the vibrations transmitted on olive trees by mechanized harvest by shakers. *Acta Hortic.* **2008**, *791 Pt 1*, 285–295. [CrossRef]
86. Bentaher, H.; Haddar, M.; Fakhfakh, T.; Mâalej, A. Finite elements modeling of olive tree mechanical harvesting using different shakers. *Trees-Struct. Funct.* **2013**, *27*, 1537–1545. [CrossRef]
87. Golpira, H.; Loghavi, M. Vibration Mode for Effective Mechanical Harvesting of Shengy Olive. *J. Agric. Mach.* **2022**, *12*, 33–41. [CrossRef]
88. Camposeo, S.; Vicino, F.; Vivaldi, G.A.; Pascuzzi, S. Re-shaping pruning improves the dynamic response of centuries-old olive trees to branch-shaker vibrations application. *Front. Plant Sci.* **2023**, *14*, 1155120. [CrossRef]
89. Ghonimy, M.; Ibrahim, M.M.; Helmy, H.S.; Alzoheiry, A. Power requirements for olive mechanical harvesting using trunk shaker. *Sci. Rep.* **2024**, *14*, 25585. [CrossRef] [PubMed]
90. Visco, T.; Molfese, M.; Cipolletti, M.; Corradetti, R.; Tombesi, A. The influence of variety and harvesting period on the efficiency of mechanical harvesting of adult olive trees in Abruzzo, Italy. *Acta Hortic.* **2008**, *791 Pt 1*, 431–434. [CrossRef]
91. Visco, T.; Molfese, M.; Cipolletti, M.; Corradetti, R.; Tombesi, A. The influence of training system, variety and fruit ripening on the efficiency of mechanical harvesting of young olive trees in Abruzzo, Italy. *Acta Hortic.* **2008**, *791 Pt 1*, 425–429. [CrossRef]
92. Farinelli, D.; Ruffolo, M.; Boco, M.; Tombesi, A. Yield efficiency and mechanical harvesting with trunk shaker of some international olive cultivars. *Acta Hortic.* **2012**, *949*, 379–384. [CrossRef]
93. Zipori, I.; Dag, A.; Tugendhaft, Y.; Birger, R. Mechanical harvesting of table olives: Harvest efficiency and fruit quality. *HortScience* **2014**, *49*, 55–58. [CrossRef]
94. Biton, I.; Namdar, D.; MAni, Y.; Ben Ari, G. Table Olives: Toward Mechanical Harvesting. In *Olive Cultivation*; IntechOpen: London, UK, 2016; Volume 11, ISBN 0000957720.
95. Rosa, U.; Ferguson, L.; Gliever, C.; Glozer, K.; Crisosto, C.; Krueger, B.; Diaz-Silva, R.; Pursell, D.; Galbraith, J.; Castro-Garcia, S.; et al. Fruit injury from mechanical harvester for California Black Ripe Prrocessed table olive. *Acta Hortic.* **2009**, 337–348. [CrossRef]
96. Lavee, S.; Avidan, B.; Ben-Ari, G. Trends in Breeding New Olive Varieties in Israel for Quality and Economic Management. *Agric. Sci.* **2014**, *5*, 701–709. [CrossRef]
97. Nissim, Y.; Shloberg, M.; Biton, I.; Many, Y.; Doron-Faigenboim, A.; Zemach, H.; Hovav, R.; Kerem, Z.; Avidan, B.; Ben-Ari, G. High temperature environment reduces olive oil yield and quality. *PLoS ONE* **2020**, *15*, e0231956. [CrossRef]
98. Nissim, Y.; Shlosberg, M.; Biton, I.; Many, Y.; Doron-Faigenboim, A.; Hovav, R.; Kerem, Z.; Avidan, B.; Ben-Ari, G. A High Temperature Environment Regulates the Olive Oil Biosynthesis Network. *Plants* **2020**, *9*, 1135. [CrossRef]
99. Jiménez-Jiménez, F.; Castro-García, S.; Blanco-Roldán, G.L.; González-Sánchez, E.J.; Gil-Ribes, J.A. Isolation of table olive damage causes and bruise time evolution during fruit detachment with trunk shaker. *Span. J. Agric. Res.* **2013**, *11*, 65–71. [CrossRef]
100. Takeda, F.; Krewer, G.; Andrews, E.L.; Mullinix, B.; Peterson, D.L. Assessment of the V45 Blueberry Harvester on Rabbiteye Blueberry and Southern Highbush Blueberry Pruned to V-Shaped Canopy. *Horttechnology* **2008**, *18*, 130–138. [CrossRef]
101. Homayouni, T.; Maharlooei, M.; Toudeshki, A.; Ferguson, L.; Ehsani, R. Simultaneous Trunk and Canopy Shaking Improves Table Olive Harvester Efficiency versus Trunk Shaking Alone. *Horticulturae* **2023**, *9*, 640. [CrossRef]

102. Tombesi, A.; Famiani, F.; Proietti, P.; Guelfi, P. Efficiency of different olive harvesting methods and effects on the trees and oil quality. *Ezzaitouna Rev. Sci. Oléic. Oléotec.* **1996**, *2*, 93–101.
103. Dag, A.; Ben-Gal, A.; Yermiyahu, U.; Basheer, L.; Nir, Y.; Kerem, Z. The effect of irrigation level and harvest mechanization on virgin olive oil quality in a traditional rain-fed 'Souri' olive orchard converted to irrigation. *J. Environ. Sci. Health B* **2008**, *88*, 1524–1528. [CrossRef]
104. Inglese, P.; Famiani, F.; Galvano, F.; Servili, M.; Esposto, S.; Urbani, S. Factors affecting extra-virgin olive oil composition. *Hortic. Rev.* **2011**, *38*, 83–147.
105. Abenavoli, L.M.; Proto, A.R. Effects of the diverse olive harvesting systems on oil quality. *Agron. Res.* **2015**, *13*, 7–16.
106. Famiani, F.; Farinelli, D.; Urbani, S.; Al Hariri, R.; Paoletti, A.; Rosati, A.; Esposto, S.; Selvaggini, R.; Taticchi, A.; Servili, M. Harvesting system and fruit storage affect basic quality parameters and phenolic and volatile compounds of oils from intensive and super-intensive olive orchards. *Sci. Hortic.* **2020**, *263*, 109045. [CrossRef]
107. Sola-Guirado, R.R.; Ceular-Ortiz, D.; Gil-Ribes, J.A. Automated system for real time tree canopy contact with canopy shakers. *Comput. Electron. Agric.* **2017**, *143*, 139–148. [CrossRef]
108. Birger, R.; Abd-ElHadi, F.; Ronen, A.; Cohen, E.; Ankorion, Y.; Najjar, A.; Moreno, J. Olive HarvestVant, a new harvest-aid formulation for improving fruit abscission and mechanical harvesting. *Acta Hortic.* **2008**, *791 Pt 1*, 257–263. [CrossRef]
109. Ferguson, L.; Garcia, S.C. Transformation of an ancient crop: Preparing California "manzanillo" table olives for mechanical harvesting. *Horttechnology* **2014**, *24*, 274–280. [CrossRef]
110. Pannelli, G. Cultivation models for olive groves and mechanisation of harvesting: Technical and economic considerations. *Adv. Hortic. Sci.* **2010**, *24*, 21–28.
111. Pannelli, G.; Gucci, R. La gestione della chioma. In *Collana Divulgativa dell'Accademia-Volume V*; Accademia Nazionale dell'Olivo e dell'Olio, Ed.; Accademia Nazionale dell'Olivo e dell'Olio: Perugia, Italy, 2012; pp. 1–19.
112. Caruso, T.; Proietti, P. Modelli d'impianto, forme di allevamento e criteri di potatura per la nuova olivicoltura. In *Collana Divulgativa dell'Accademia-Volume IV*; Accademia Nazionale dell'Olivo e dell'Olio, Ed.; Accademia Nazionale dell'Olivo e dell'Olio: Perugia, Italy, 2012; pp. 1–22.
113. Adrian, P.A.; Fridley, R.B. Shaker-Clamp Design in Relation to Allowable Stresses of Tree Bark. *Trans. ASAE* **1964**, *7*, 232–234. [CrossRef]
114. Sorgonà, A.; Proto, A.R.; Abenavoli, L.M.; Di Iorio, A. Spatial distribution of coarse root biomass and carbon in a high-density olive orchard: Effects of mechanical harvesting methods. *Trees* **2018**, *32*, 919–931. [CrossRef]
115. Sola-Guirado, R.R.; Sánchez-Cachinero, P.; Tombesi, S. Configurable trunk shaker for the mechanical harvesting of different fruit branches. *J. Vib. Control.* **2024**, *30*, 2050–2058. [CrossRef]
116. Castro-Garcia, S.; Farinelli, D.; Ferguson, L.; Gil-Ribes, J.A.; Famiani, F. Olive Harvesting. In *The Olive: Botany and Production*; CABI: Wallingford, UK, 2023; pp. 478–509. [CrossRef]
117. Di Fazio, S.; Modica, G. Historic Rural Landscapes: Sustainable Planning Strategies and Action Criteria. The Italian Experience in the Global and European Context. *Sustainability* **2018**, *10*, 3834. [CrossRef]
118. Guzmán, G.; Boumahdi, A.; Gómez, J.A. Expansion of olive orchards and their impact on the cultivation and landscape through a case study in the countryside of Cordoba (Spain). *Land Use Policy* **2022**, *116*, 106065. [CrossRef]
119. Bernardi, B.; Benalia, S.; Fazari, A.; Zimbalatti, G.; Stillitano, T.; De Luca, A.I. Mechanical harvesting in traditional olive orchards: Oli-picker case study. *Agron. Res.* **2016**, *14*, 683–688.
120. Almeida, A.; Peça, J. Assessment of the Oli-Picker Harvester in Northeast Portugal. *Acta Hortic.* **2012**, *949*, 359–364. [CrossRef]
121. Sola-Guirado, R.R.; Jimenez-Jimenez, F.; Blanco-Roldan, G.L.; Castro-Garcia, S.; Castillo-Ruiz, F.J.; Gil-Ribes, J.A. Vibration parameters assessment to develop a continuous lateral canopy shaker for mechanical harvesting of traditional olive trees Span. *J. Agric. Res* **2016**, *14*, 204.
122. Sola-Guirado, R.R.; Sánchez-Cachinero, P.; Blanco-Roldán, G. Simultaneous trunk and branch shaking in an over-the-row olive harvester. *Biosyst. Eng.* **2023**, *231*, 92–103. [CrossRef]
123. Benalia, S.; Bernardi, B.; Cubero, S.; Leuzzi, A.; Larizza, M.; Blasco, J. Preliminary trials on Hyperspectral imaging implementation to detect Mycotoxins in dried figs. *Chem. Eng. Trans.* **2015**, *44*, 157–162. [CrossRef]
124. Anello, M.; Mateo, F.; Bernardi, B.; Giuffrè, A.M.; Blasco, J.; Gómez-Sanchis, J. Convolutional neural networks to assess bergamot essential oil content in the field from smartphone images. *Ind. Crops Prod.* **2024**, *220*, 119233. [CrossRef]
125. Zheng, Y.; Liu, J.; Wang, D.; Yang, R. Laser scanning measurements on trees for logging harvesting operations. *Sensors* **2012**, *12*, 9273–9285. [CrossRef]
126. Scolaro, E.; Beligoj, M.; Estevez, M.P.; Alberti, L.; Renzi, M.; Mattetti, M. Electrification of Agricultural Machinery: A Review. *IEEE Access* **2021**, *9*, 164520–164541. [CrossRef]

Disclaimer/Publisher's Note: The statements, opinions and data contained in all publications are solely those of the individual author(s) and contributor(s) and not of MDPI and/or the editor(s). MDPI and/or the editor(s) disclaim responsibility for any injury to people or property resulting from any ideas, methods, instructions or products referred to in the content.