AgriEngineering

Article

Design Thinking for the Development of an Affordable Pea Sheller: Addressing Co-Design in Rural Areas

Ivonne Angelica Castiblanco Jimenez [1,2,*] and Joan Paola Cruz Gonzalez [1]

[1] Industrial Engineering Department, Escuela Colombiana de Ingenieria Julio Garavito, Ak 45 205-59, Bogota 110111, Colombia; joan.cruz@escuelaing.edu.co
[2] Department of Psychology, University of Turin, Via Verdi 8, 10124 Turin, Italy
* Correspondence: ivonne.castiblanco@escuelaing.edu.co

Abstract

Manual pea shelling is a labor-intensive task facing small-scale farmers in rural areas, requiring substantial physical effort and limiting productivity. This study employed a Design Thinking methodology to co-design an affordable, automatic pea sheller addressing the specific needs of resource-constrained farmers. The methodology comprised five phases: empathizing with farmers through interviews, defining technical specifications from user requirements and benchmarking analysis, ideating preliminary concepts through collaborative brainstorming, prototyping using 3D-printed food-grade materials, and testing with end-users under real operating conditions. The developed sheller features counter-rotating rollers operating at optimized speed with dual compartments for grain and shell separation. Experimental validation demonstrated good extraction efficiency with minimal grain damage, while field testing confirmed substantial time reduction compared to manual shelling and strong user acceptance. The fully 3D-printable design enables affordable, customizable production suitable for small-scale operations, demonstrating how user-centered co-design can create accessible agricultural technology that addresses both technical performance and socioeconomic constraints in rural communities.

Keywords: design thinking; co-design; pea sheller; agricultural technology; 3D printing; small-scale farmers; rural communities

check for updates

Academic Editor: Gabriel Henrique Horta de Oliveira

Received: 4 September 2025
Revised: 19 October 2025
Accepted: 21 October 2025
Published: 1 November 2025

Citation: Castiblanco Jimenez, I.A.; Cruz Gonzalez, J.P. Design Thinking for the Development of an Affordable Pea Sheller: Addressing Co-Design in Rural Areas. *AgriEngineering* **2025**, *7*, 360. https://doi.org/10.3390/agriengineering7110360

Copyright: © 2025 by the authors. Licensee MDPI, Basel, Switzerland. This article is an open access article distributed under the terms and conditions of the Creative Commons Attribution (CC BY) license (https://creativecommons.org/licenses/by/4.0/).

1. Introduction

Peas (*Pisum sativum*, L.) are an important source of protein, fiber, and micronutrients, and their cultivation and consumption are widespread in many countries [1,2]. However, the manual peeling of peas is a tedious and time-consuming task that requires significant manual labor, increasing production costs and reducing the cost-effectiveness for small farmers and rural distributors. Moreover, the manual process of peeling peas can be a barrier to their consumption, particularly among low-income households who may not have the time or resources to peel and prepare peas. In this context, the development of an affordable pea sheller device can enhance the efficiency of this process, reducing labor costs and increasing the availability and accessibility of peas in rural areas. At the same time, this can reduce production costs, increase profitability for small farmers, and make peas more affordable for consumers.

While several automatic peeling machines are available on the market, these devices present significant barriers for adoption by small farmers and households in rural areas. Research has consistently shown that few farm households in developing countries can

invest in agricultural machinery due to substantial capital requirements and lack of access to credit [3]. Commercial pea shellers typically fall into two categories: industrial-scale machinery designed for large-scale processing operations, and manual devices that still require substantial physical effort and time [4–6]. Industrial machines, while highly efficient, are prohibitively expensive for smallholder farmers. For instance, a power-operated green-pea sheller developed in India, with a processing capacity of 107 kg/h and 97.5% shelling efficiency, costs approximately USD 360 [7], which remains economically unfeasible for individual small-scale farmers or households that process modest quantities. These systems typically require a stable electricity supply, technical expertise for operation and maintenance, and processing capacities far exceeding the needs of small-scale operations [3–5]. Manual alternatives, such as hand-operated roller devices [4] or pedal-activated systems [6], while more affordable, still demand considerable physical effort and time, failing to significantly reduce the labor burden compared to traditional hand-shelling methods. Research on technology adoption has identified multiple barriers that small-scale farmers face simultaneously, including a lack of capital, limited access to technical training, weak supply chains, and the complexity of equipment [8]. Furthermore, existing devices often lack consideration for the specific ergonomic needs and constraints of users in rural contexts, particularly women who perform the majority of post-harvest processing tasks. The importance of designing products oriented towards women in agricultural activities cannot be overlooked, as it plays an essential role in bridging the gender gap in the agricultural sector. Women make up a substantial portion of the global agricultural workforce and play a critical role in food production and rural economies, often facing challenges and constraints due to gender disparities [9–11]. In this context, designing products that consider their needs and preferences is crucial for ensuring equal participation. This gap between available technologies and the actual needs of small-scale farmers presents a significant opportunity for innovation through user-centered design (UCD) approaches that can deliver affordable, accessible, and contextually appropriate solutions.

This study addresses the pressing need for an affordable design oriented to the specific requirements of small-scale farmers. The development of such a device presents a novel technological advancement and holds importance in fostering sustainable agricultural practices, improving productivity, and ensuring equitable access to agricultural machinery. To achieve this goal, considering the unique challenges small farmers face, a UCD approach was adopted, precisely Design Thinking (DT) and co-creation. This article highlights the significance of advancing agricultural technology and the potential positive impacts of co-design on small farmers and broader society.

This article is structured as follows: Section 2 contains the DT methodology definition and the tools selected for each phase; Section 3 presents the implementation of the methodology, following the principles of the DT; the problem definition and background analysis will be explored in the “empathize” and “define” phases. The following stages, namely, the “ideate” and “prototype” phases, will focus on concept design and prototyping. And in the last “test” phase, the developed prototype will be evaluated to assess its functionality and user satisfaction. Finally, Sections 4 and 5 present the results and conclusions.

2. Methodology and Tools

UCD places end-users at the forefront of product development, ensuring that the final solution meets their needs, preferences, and limitations [12]. In the context of small-scale farmers in rural areas, designing accessible agricultural equipment to operate, maintain, and repair is critical [13]. Involving the target users throughout the development process will increase user satisfaction, improve productivity, and enhance technology acceptance.

In this sense, DT, a human-centered problem-solving approach, provides a particularly suitable framework for developing an automatic pea sheller for rural communities. The selection of DT as our research methodology is grounded in several theoretical foundations that align with the specific challenges of designing agricultural technology for resource-constrained environments. First, DT's emphasis on empathy and deep user understanding addresses the critical gap identified in agricultural technology development, where solutions often fail due to insufficient consideration of local contexts, cultural practices, and user capabilities [14,15]. Second, the iterative and collaborative nature of DT enables the integration of tacit knowledge from farmers-knowledge that is difficult to articulate but essential for creating contextually appropriate solutions [16,17]. Third, DT's prototyping philosophy allows for rapid, low-cost experimentation, which is particularly valuable when working with communities where resources are limited and the risk of technology rejection is high [18,19]. Unlike conventional engineering approaches that may prioritize technical optimization over user acceptance, DT systematically balances technical feasibility with desirability and viability, ensuring that innovations are not only functional but also culturally acceptable and economically sustainable for the target population [14,20]. This approach has been successfully validated in similar agricultural contexts, demonstrating improved adoption rates and sustained use of co-designed technologies compared to top-down interventions [16,17].

DT emphasizes empathy, collaboration, iteration, and a focus on user needs throughout the design process. This methodology comprises five phases: empathize, define, ideate, prototype, and test [14]. These phases enable researchers and designers to gain a deep understanding of the users' needs, generate innovative ideas, develop prototypes, and refine the design based on user feedback.

On the other hand, the social responsibility of engineering design is paramount, demanding addressing several key aspects to ensure equitable and sustainable outcomes [21–23]. First, affordability and accessibility are fundamental considerations, requiring the design to be cost-effective and attainable for individuals with limited financial resources. Second, improving livelihoods through increased efficiency and productivity is essential, as the technology should alleviate labor-intensive tasks and empower farmers to allocate resources towards income-generating activities. Co-design involves the integration of end-users' perspectives from the outset of the ideation process by incorporating them into multidisciplinary teams [24], these principles are vital in ensuring ease of operation for individuals with limited technical expertise and promoting inclusivity [25,26]. Moreover, safety and health considerations must also be integrated, minimizing risks associated with the operation and addressing potential health risks. In our context, by employing DT, the resulting pea sheller can effectively address the requirements of small farmers while integrating the community into the co-design and development process.

DT methodology has proven helpful in various fields related to agriculture and sustainability [14,15,18–20]. Researchers and practitioners have recognized its potential to address complex challenges and foster innovative solutions in these domains. For instance, a study by Yi et al. [16] applied DT to develop sustainable food systems by engaging stakeholders, including farmers and consumers, to co-create solutions for new product innovations related to *Pandanus amaryllifolius* (pandan) with a local farm collective in Thailand. Similarly, another research article by Stratakis et al. [17] demonstrated the application of design thinking in the development of sustainable agricultural technologies, focusing on users' needs and integrating intelligence environments. These examples highlight the versatility and effectiveness of design thinking in driving sustainable change and creating solutions that align with environmental, social, and economic objectives.

We considered previously validated studies on DT [16,17,19], and following their recommendations, we selected a set of tools reported in Table 1 for every phase of the methodology.

Table 1. DT Methodology phases and tools.

	Objective	Tools
Empathize	Define the context and users and discover their perceptions and needs.	• Context exploration: explore the current sector, users, and challenges.
Define	Summarize the problem based on the gathered insights and express the users' requirements as technical specifications.	• Benchmarking: investigate techniques and systems currently being used to solve the problem. • Needs analysis and definition of preliminary technical specifications.
Ideate	Generate shared ideas to solve the problem.	• Brainstorming: work collaboratively with key users to develop shared ideas to solve the problem and address their needs. • Sketches: generate sketches with the key users that represent their ideas into preliminary concepts. • Concept scoring: evaluate the preliminary concepts using a weighted selection.
Prototype	Concretize the idea.	• Computer-Aided Design: create a CAD concept with which users can engage to transform preliminary ideas into visual models. • Prototype: create a physical prototype after assessing the CAD concept.
Test	Evaluate the prototype and provide feedback.	• Evaluation of specifications and physical prototype • Analysis of the user's perceptions.

3. Implementation

The following section will show the implementation of each one of the DT phases described in Table 1 (empathize, define, ideate, prototype, and test) and the application of the selected tools.

3.1. Empathize

During the product design and development process, user integration can benefit the future acceptance of new technologies [27]. In the empathize phase, we began by analyzing and defining the context of our case and interacting with the potential users to know their needs.

Context Exploration

A small farmer is an individual or household engaged in agricultural activities with relatively small landholding sizes and limited resources compared to large-scale commercial farmers [28]. In rural areas, a significant majority, accounting for approximately 85% of farmers, are involved in agricultural activities on land holdings of less than 2.0 hectares (ha).

Moreover, a considerable proportion, estimated at around 75%, of individuals experiencing poverty reside in rural areas [29]. Within this specific demographic, small farmers face limited access to productive assets and income sources within society [29,30].

Small farmers and households in rural areas have limited access to affordable and mechanized post-harvest processing equipment and operate within distinct socio-economic and infrastructural conditions. In this sense, the pea sheller should be designed with durability and affordability in mind, considering budget constraints. Considerations of portability and ease of maintenance are crucial, as rural areas often lack sophisticated repair facilities or readily available technical expertise. Moreover, considering the multi-purpose nature of household activities in rural areas, the pea sheller design should be versatile enough to integrate into their daily routines, potentially serving as a kitchen appliance for its specific pea peeling functionality.

The customer analysis was conducted among a group of small farmers from Colombia. In this country, the cultivation of peas holds substantial importance, ranking as the second most cultivated crop after beans. In Colombia, peas are primarily grown for fresh consumption as a vegetable, while the demand for dry beans is predominantly fulfilled through imports, primarily from Canada [31]. Peas are considered one of the primary products of the Colombian small and medium farmer economy, especially in the Andean zone. Its production is very simple and also very profitable; with only 1 kg of seed sown, 125 kg of fresh peas in pods can be harvested. This crop is outstanding in several regions of the Colombian territory, especially in the cold and medium climate, located in the Cundinamarca and Boyacá highlands and the departments of Nariño and Tolima, between 2200 and 3000 m above sea level [26].

The selection of Cundinamarca and Boyacá as study regions was strategically determined by several factors that make them representative of broader pea-growing contexts in Colombia and similar highland agricultural zones. These regions share common characteristics with other major pea-producing areas in terms of altitude (2200–3000 m.a.s.l.), climate conditions (cold to temperate highland climate with average temperatures between 8–16 °C), and agricultural practices predominantly carried out by smallholder farmers operating on plots of less than 2 hectares. The farming communities in these regions face similar challenges to those in other Colombian pea-growing departments, such as Nariño and Tolima, including limited access to mechanized post-harvest equipment, reliance on manual labor for processing, and constrained financial resources [32,33]. Furthermore, the socioeconomic profile of farmers in Cundinamarca and Boyacá, characterized by small landholdings, family-based labor, and direct involvement of women in agricultural activities, mirrors the demographic composition found in other Andean pea-growing regions across Latin America, including areas in Peru, Ecuador, and Bolivia where similar crops are cultivated under comparable conditions. While we acknowledge that specific cultural practices and market access may vary across regions, the fundamental challenges related to manual pea shelling, time constraints, and the need for affordable, accessible technology remain consistent across these highland farming contexts. This regional representativeness strengthens the potential applicability of our co-designed solution to similar agricultural communities beyond the immediate study area.

For the customer analysis, we chose face-to-face interviews over surveys, considering the target audience, who may have limited access to technology or may be reluctant to answer questionnaires; moreover, it allowed us to establish direct contact and build rapport with the participants. To capture a broad range of perspectives and insights regarding the challenges and needs of users from similar agricultural contexts, a total of 83 small farmers and households (61 women and 22 men) were interviewed across the Cundinamarca and Boyacá regions. All the individuals reported consuming and farming peas, 68% of the

users reported that due to the higher price, they are most likely to buy pods and expend time performing the manual process of shelling peas. Notably, more than 90% reported their interest in purchasing a household appliance to simplify this process if the price is low. After analyzing the responses to the question of the preference for a manual vs. an automatic device, users expressed their interest in an automatic one only if costs are kept low. In general, users considered shelling peas a repetitive and tiring task and manifested their interest in a household appliance that handles this labor. Some reasons for using this appliance include avoiding manual operation, time-saving, and cleanliness.

From the information gathered, we identified some of our users' main expectations:

- Noise mitigation system: It is important to consider the electrical operation of the product; therefore, it must be ensured that the appliance does not generate excessive noise that could affect the person handling the product.
- Pods waste collector: The product should include a compartment designed to collect husk waste, avoid disorder in the workspace, and optimize the available space.
- Lightweight: To ensure the product is portable, the materials used in its production should be considered without compromising the quality and resistance.
- Easy to clean: The mechanism must be designed so that water does not affect its operation, thus maintaining the cleanliness of the compartments once the product has been used.
- Automatic operation: The product must have a mechanism to speed up the shelling process.

3.2. Define

Based on the insights gained from the empathize phase, once we identified the main expectations of the users, we expressed the users' needs as a requirement. In addition, during this phase, it is beneficial to investigate current pea sheller mechanisms available in the market through a benchmarking approach.

3.2.1. Mechanism Benchmarking

A benchmark study can be defined as the exploration of existing processes with similar functionality to that of the system under study [34]. It is conducted with products found in the market that have already been developed, which can be compared in terms of functionality, materials, and technology. In this context, benchmarking with similar products is essential as it provides valuable insights into existing solutions within the same category. Our analysis specifically focused on evaluating and comparing products that align with the users' needs, enabling us to identify best practices, potential improvements, and opportunities for innovation in designing the pea sheller for our target users. After performing the benchmark analysis, we identified three leading devices within this field, selected due to the similarity in their mechanisms' operation and relevance to the target market (Table 2). These devices represent the two primary categories of pea shelling solutions currently available: manually operated systems for household use and industrial-scale automated machinery.

Table 2. Mechanism Benchmarking.

Specifications	System		
	[A] CZ24353U1 [4]	**[B] US6960131B2 [5]**	**[C] US1831772A [6]**
Target market (household/industrial)	Household	Industrial	Household
Shelling mechanism	Pressure rollers	Cylindrical rotating drum/satellite beaters	Moving blades
Feeding and process orientation	Horizontal	Horizontal	Circular motion
Final product storage	Container	Container	N/A
Shell deposition	N/A	N/A	N/A
Feeding system	Manual	Vibrating belt	Manual
Activation type	Handle	Handle	Pedals

Among the manual household devices, the first product analyzed [A] (CZ24353U1) is oriented to the family market and employs pressure rollers with manual activation through a hand crank mechanism. While this design offers affordability and simplicity, it presents several significant limitations for rural small-scale farmers. The manual operation requires continuous physical effort, with users typically processing only 1–2 kg of pods per hour, representing minimal improvement over traditional hand-shelling methods. The device also lacks an automatic feeding system, requiring constant attention and manual insertion of each pod, which limits productivity and prevents users from multitasking during processing. The absence of separate compartments for waste disposal and grain collection creates disorder in the workspace and complicates post-processing cleanup. Additionally, the hand-crank mechanism can cause repetitive strain injuries during extended use, particularly problematic for women who perform the majority of post-harvest processing tasks in rural communities.

Similarly, product [C] (US1831772A), also designed for the household market, utilizes rotating blades activated by foot pedals rather than hand cranks. While the pedal-activation mechanism theoretically frees the hands for feeding pods, the design suffers from analogous limitations. The rotating blade system requires precise pod positioning to avoid grain damage, demanding considerable user skill and attention. The circular motion processing orientation, combined with the absence of separate collection compartments for shells and grains, results in mixed output that requires additional manual sorting. Furthermore, the pedal-operated mechanism, while novel, demands sustained leg effort that can be equally fatiguing during prolonged operation, and the device's reliance on user coordination between foot and hand movements increases the learning curve and reduces accessibility for elderly users or those with limited mobility.

In contrast to these manual devices, product [B] (US6960131B2) represents industrial-scale machinery employing a vibrating belt conveyor system and cylindrical rotating drum with satellite beaters for high-volume processing. While this device achieves high throughput and efficiency suitable for commercial operations, its applicability to small-scale farmers is severely constrained by multiple factors. The device's substantial physical dimensions and weight, typically 1.5–3 m in length and several hundred kilograms, make it impractical for household environments with limited space and impossible to relocate or store easily. Moreover, the high capital investment required for commercial pea shellers of this category (typically USD 3000-USD 10,000) places them far beyond the economic reach of

individual small farmers or households. The processing capacity of 100+ kg/h far exceeds the typical needs of small-scale operations, which process only 5–20 kg per session, making the investment economically unjustifiable. Industrial shellers also require a stable electrical power supply, often 220–380 V three-phase power, which is frequently unavailable or unreliable in rural areas of developing countries. Furthermore, the mechanical complexity of conveyor systems, rotating drums, and satellite beaters necessitates technical expertise for operation, maintenance, and repair—resources that are scarce in rural communities lacking access to specialized technicians or replacement parts.

The comparative analysis of existing devices reveals a fundamental gap in the market for pea shelling technology appropriate for small-scale farmers and rural households. Manual devices [A] and [C], while affordable and simple, fail to significantly reduce labor burden or processing time compared to traditional methods, undermining their value proposition for users seeking meaningful efficiency improvements. Conversely, industrial machinery [B], despite its high efficiency, presents insurmountable barriers related to cost, infrastructure requirements, technical complexity, and scale mismatch. This dichotomy, between ineffective manual tools and inaccessible industrial machinery, creates a critical need for an intermediate solution that combines automation to reduce physical effort and processing time, affordability to ensure economic accessibility for resource-constrained users, appropriate scale matching the processing volumes of small farms and households (5–20 kg per session), simple operation requiring minimal technical expertise, and low infrastructure requirements compatible with rural electrical systems or alternative power sources. None of the benchmarked devices adequately addresses the specific constraints and requirements of small-scale farmers in rural areas of developing countries, where limited financial resources, unreliable infrastructure, and lack of technical support create unique challenges. This gap establishes the need for a new design specifically oriented to this user segment, which motivated the user-centered, co-design approach adopted in this study.

3.2.2. Needs Analysis and Definition of Preliminary Technical Specifications

The customers' needs, previously collected through surveys, were analyzed and complemented with the insights from the benchmarking. After a focus group analysis, we identify the main product requirements. Table 3 highlights the identified needs, the description, and the resulting technical specifications formulated to guarantee the fulfillment of the product objectives.

The technical specifications presented in Table 3 were determined through systematic integration of user requirements identified during the empathize phase, limitations observed in benchmarked devices, and engineering feasibility constraints. The compact size requirement emerged directly from user feedback emphasizing portability and limited storage space in rural households, while benchmarking revealed that industrial devices' large dimensions (1.5–3 m) were impractical for this context. The specification for an automatic roller mechanism operating at 40 rpm was established through preliminary engineering analysis of pod mechanical properties and validated during prototype development. As detailed in Section 3.4, comparative testing at different rotational speeds (20–60 rpm) confirmed that 40 rpm achieves optimal grain extraction efficiency while minimizing mechanical damage. The selection of food-grade Nylon 6.6 for grain-contact components responds to user expectations for hygiene and safety identified during interviews, regulatory standards for food-contact materials, and environmental sustainability through recyclability. The specification for two separate compartments oriented in opposite directions directly addresses user complaints about existing devices lacking waste separation (observed in benchmarked products A and C), which created workspace disorder. These specifications

subsequently informed the design of preliminary concepts presented in Section 3.3, which explored different technical approaches to meeting these determined requirements.

Table 3. User needs and requirements.

Requirement	Description	Specification
Size	The product should not occupy significant space within the area available to the user.	The sheller should be of average size for home use and small farmers.
Mechanism and Activation	The mechanism must ensure that the shelling process does not compromise the integrity or quality of the final product. It must be automatic.	The roller mechanism will operate at 40 rpm, enabling the proper extraction of the pod without causing any damage due to pressure. Furthermore, this mechanism will be powered by an electric motor to facilitate the task.
Final product storage	The storage compartment for storing grains outside the pod must meet strict hygienic standards, employing a food-grade material that is both safe for human consumption and easy to handle.	The disintegrator material will be Nylon 6.6, which is suitable for food handling and will not compromise the quality of the final product.
Shell disposal	To ensure proper waste management, the sheller should be equipped with a distinct compartment designated for the storage of residual materials.	The sheller will have two compartments arranged in opposite directions to collect the empty husk and the grains.

3.3. Ideate

During the Ideate phase, we worked closely with a reduced group of small farmers (8 women and 5 men), particularly interested in the co-design process, to generate creative ideas and potential solutions. This phase encouraged open-mindedness and collaboration, allowing us to explore diverse perspectives. Through brainstorming and sketching, we collectively generated two concepts to address the identified challenges. By involving small farmers in this phase, we ensured that their valuable insights and experiences shaped the ideation process, resulting in practical and relevant solutions to their specific needs. The co-design process was conducted by the engineering team in partnership with the small farmers, whose primary occupations are farming activities. Accordingly, our primary focus in the ideation phase was not on producing highly technical drawings but on enabling co-creation and engaging the end users.

3.3.1. Brainstorm for Ideation

In collaborative problem-solving, convergence is important as the team focuses on the best ideas. Brainstorming helps generate ideas and share thoughts [35]. After analyzing different possibilities, we used brainstorming to consolidate two ideas, depicted through simple sketches, providing a visual representation of the preliminary concepts. These sketches served as a visual reference point, helping the team improve and develop the most promising ideas into viable preliminary concepts.

It is important to note that these preliminary sketches (Figure 1) intentionally maintain their hand-drawn character as they authentically represent the collaborative co-design process with the farming community. Rather than presenting polished technical drawings at this initial ideation stage, we preserved the visual documentation of the brainstorming sessions to emphasize the participatory nature of the design process and the direct input from end-users who are not trained engineers. This approach aligns with participatory

design principles where initial concepts emerge from collaborative dialogue rather than top-down technical specifications. The selected concept was subsequently developed into three-dimensional CAD models (Figure 2) with technical drawings (Figure 3) and functional prototypes (Figure 4), ensuring technical compliance while maintaining the community's ownership of the ideation process. This progression from participatory sketches to professional technical documentation demonstrates both the authenticity of community engagement and the engineering rigor applied throughout the development process.

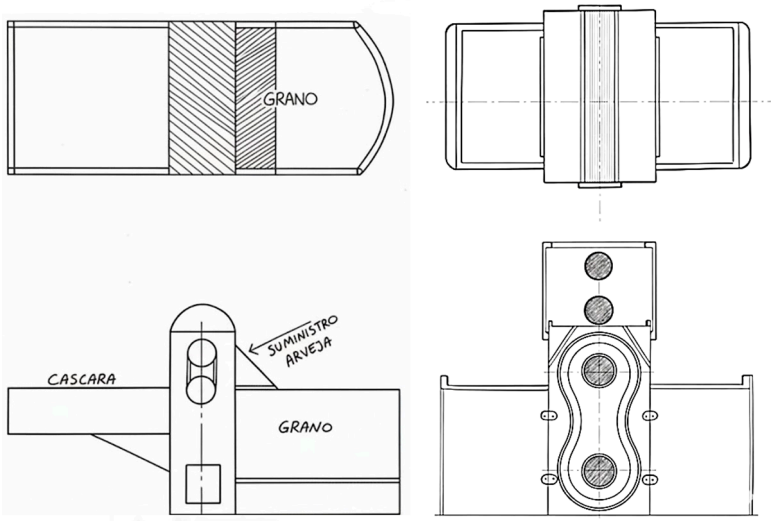

Figure 1. Preliminary concept sketches co-created during collaborative brainstorming sessions with farming communities. These hand-drawn sketches authentically document the participatory ideation process. (**a**) Concept C1: Electrical sheller with horizontal roller system and dual compartments. (**b**) Concept C2: Battery-operated sheller with vertical roller system. CAD renderings and technical drawings of the selected concept are presented in Figures 2 and 3.

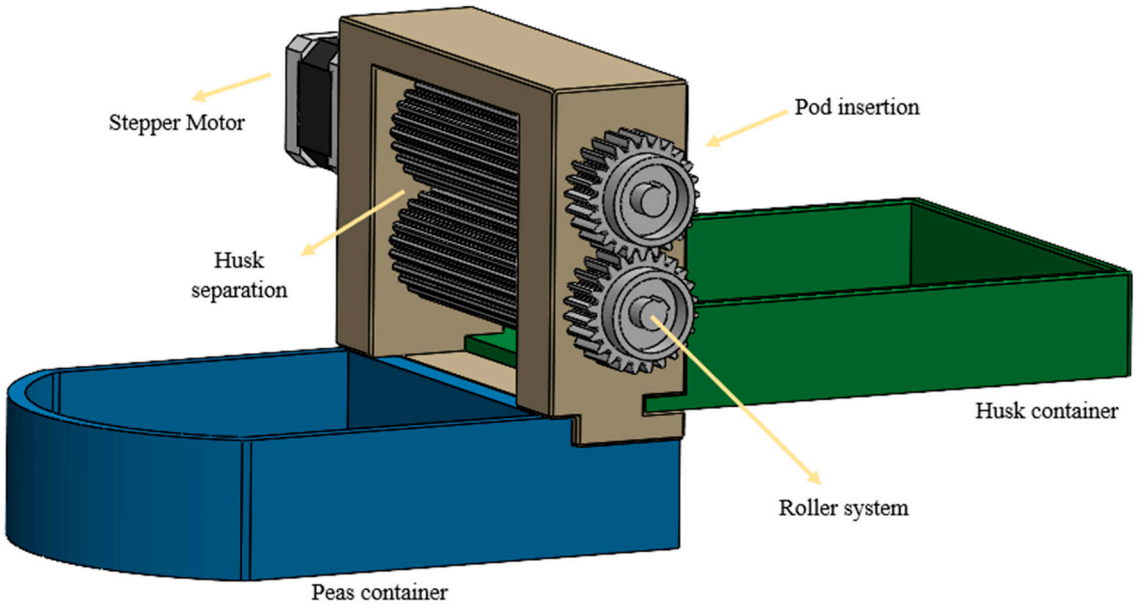

Figure 2. Three-dimensional CAD model of the selected pea sheller concept developed from participatory design sessions. The model illustrates the counter-rotating roller mechanism, pod insertion system, dual collection compartments, and motor placement.

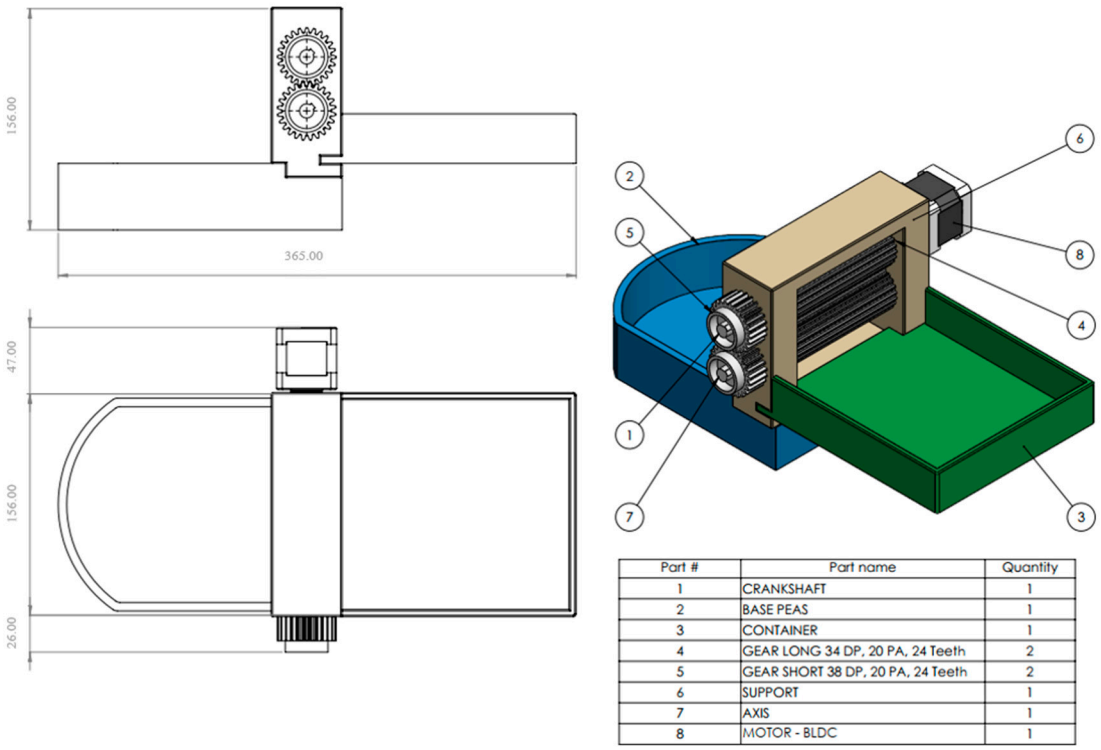

Part #	Part name	Quantity
1	CRANKSHAFT	1
2	BASE PEAS	1
3	CONTAINER	1
4	GEAR LONG 34 DP, 20 PA, 24 Teeth	2
5	GEAR SHORT 38 DP, 20 PA, 24 Teeth	2
6	SUPPORT	1
7	AXIS	1
8	MOTOR - BLDC	1

Figure 3. Pea sheller prototype assembly and component list. The figure shows the general arrangement for illustrative purposes; not intended as a production engineering drawing. "#" denotes item number.



Figure 4. The 3D-printed functional prototype created using food-grade Nylon 6.6 material. The images illustrate the complete assembly with visible roller mechanism and dual compartments (**left**), and the device in operation, processing pea pods with separated grain collection (**right**).

In the first sketch (Figure 1a), the sheller (C1) features a manual feeding system on the right side, then the pods pass through a horizontal roller system, where the rollers, once activated, separate the grain from its enclosing husk while ensuring the peas' integrity. This preliminary concept includes an upper tray for collecting the husks and a lower tray for storing the grain. Since it has two different compartments, the waste can be safely removed during the process. It is powered by an electric motor connected to a power outlet.

The second sketch (Figure 1b) differs from the first one, mainly because the sheller (C2) has an upper vertical tray where the peas are deposited and processed; however, removing waste during the process is not possible. Additionally, there are two onside compartments

designed to collect the peas, which can be removed for cleaning purposes. This concept is powered by batteries.

The specific features of each preliminary concept were determined through collaborative brainstorming with the farming community, translating the technical specifications from Table 3 into alternative design configurations. Concept C1 was designed with power outlet activation to provide consistent operation without ongoing battery replacement costs, addressing the economic constraints identified during user interviews. High-density polyethylene (HDPE) was selected for its food-grade safety, durability, and affordability, suitable for the target budget. The horizontal roller motion configuration was chosen based on its proven effectiveness in benchmarked devices and compatibility with gravity-assisted grain separation into the lower compartment. Concept C2 explored battery-powered operation to maximize portability and independence from electrical infrastructure, using aluminum for lightweight properties that facilitate mobility. The vertical roller motion in C2 was designed to leverage gravity for pod feeding through the system. Both concepts incorporated separate compartments for peas and shells to meet the waste separation requirement specified in Table 3, with different spatial configurations reflecting alternative approaches to the same functional objective. A summary of the preliminary concept features is presented in Table 4.

Table 4. Preliminary concepts features.

	Power Supply	Motion Type	Mechanism	Peas Storage	Shells Storage	Material
Preliminary concept C1: Electrical sheller	Power outlet	Electric engine	Horizontal roller motion	Compartment	Compartment	High-density polyethylene (HDPE)
Preliminary concept C2: Battery operated	Battery	Battery-powered engine	Vertical roller motion	Compartment	Vertical Tray	Aluminum

As these initial concepts were generated during the brainstorming phase, it is crucial to establish their relevance and assess them based on the predetermined requirements. Thus, in the following phase, we will evaluate their specifications using a concept scoring approach. The evaluation process allowed us to objectively assess the feasibility and alignment of the concepts with the identified criteria, enabling us to make informed decisions on which ideas to develop.

3.3.2. Concept Scoring

Once the preliminary concepts are presented, we will use the concept scoring technique [36] to prioritize each concept based on the predetermined requirements and relevant criteria, defined by the team, to determine which one will proceed to the prototype phase. The selection criteria presented in Table 5 are derived from the user's expectations and requirements documented in the preceding phases, with each criterion directly corresponding to specifications identified in Table 3. Size and weight (20% weight) reflect the user requirement for portability, compact design suitable for limited household spaces, and ease of handling during operation. Mechanism (10%) evaluates the technical approach to meeting the automatic operation requirement while ensuring grain integrity and minimizing physical effort, addressing ergonomic concerns about repetitive strain observed in manual hand-crank devices during benchmarking. Peas storage and shell storage (20% and 10% respectively) assess how each concept addresses the user requirement for separate compartments to maintain workspace order and facilitate ease of cleaning and waste removal. Material (10%) evaluates alignment with food safety requirements and durability

expectations. Budget (30%) receives the highest weight, reflecting the critical importance of affordability for resource-constrained users, as emphasized throughout the empathize phase, where 90% of respondents indicated interest in purchasing only if the price is low. The team collectively determined these weights through deliberation, considering the relative importance of each requirement to the target user segment. A rating scale from 1 to 5 was employed, with 5 indicating complete fulfillment of the criterion and 1 indicating poor performance. Table 5 presents the results of this concept scoring assessment.

Table 5. Concept scoring.

		C1: Electrical Sheller		C2: Battery Operated	
Selection Criteria	**Weight**	**Rating**	**Weighted Score**	**Rating**	**Weighted Score**
Size and weight	20%	4	0.8	2	0.4
Mechanism	10%	4	0.4	3	0.3
Peas storage	20%	5	1	5	1
Shell storage	10%	4	0.4	2	0.2
Material	10%	3	0.3	4	0.4
Budget	30%	4	1.2	2	0.6
Total Score		4.1		2.9	
Rank		1		2	
Continue?		Develop		No	

The rating assignments reflect systematic evaluation by the team considering technical feasibility, user requirements, and resource constraints. For size and weight, C1 received a higher rating (4) than C2 (2) because the horizontal configuration with power outlet attachment allows for a more compact footprint compared to C2's vertical tray system, requiring greater height and battery housing, making it bulkier and less suitable for limited household spaces. Regarding mechanism performance, C1 scored 4 versus C2's 3 because the horizontal roller system ensures better grain integrity through controlled pressure, while C2's gravity-assisted vertical system, though faster, posed a higher risk of grain damage from increased drop height. Both concepts received equal ratings (5) for peas storage as both incorporated adequate compartments meeting user requirements. For shell storage, C1 scored higher (4 versus 2) because its dual opposite-facing compartments allow waste removal during processing, whereas C2's vertical tray configuration retains empty pods with whole pods until process completion, complicating separation. In material assessment, C2 scored higher (4 versus 3) due to aluminum's superior durability and lightweight properties; however, C1's HDPE, while rated lower for material quality, better aligned with budget constraints. The budget criterion, weighted most heavily at 30%, strongly favored C1 (4) over C2 (2) because power outlet operation eliminates ongoing battery costs and HDPE costs significantly less than aluminum, making C1 more economically accessible for resource-constrained users. Additionally, C2's battery dependency raised sustainability concerns regarding battery disposal in rural areas with limited waste management infrastructure, further supporting C1's higher budget rating. These comparative assessments resulted in C1's total weighted score of 4.1 versus C2's 2.9.

Therefore, according to the concept scoring study, preliminary concept C1 was selected for further development and prototyping. While concept C2 demonstrated advantages in material quality and processing speed, concept C1's superior performance in budget (the most heavily weighted criterion at 30%), size, and waste management capabilities, com-

bined with its significant improvement over manual shelling methods, established it as the more suitable option for small-scale farmers' needs within resource-constrained contexts.

3.4. Prototype

In this section, the concept that obtained the highest quantitative score in the concept scoring will be taken into the prototyping process to evaluate the product according to the previously defined specifications. Additionally, perception questions of the product were conducted to verify the reception that the pea sheller may have in the previously identified market segment. With this aim, according to the previous phases' results, we propose a CAD concept followed by a physical prototype.

The concept to be developed is the pea sheller C1; Figure 2 shows the 3D render of the proposed device. The CAD model served as a virtual representation, providing users with a realistic and comprehensive view of the proposed solution. Subsequently, the team created the physical prototype, which offered several advantages. First, the physical prototype facilitated the verification of the actual operation of the sheller, allowing users to observe and assess its functionality firsthand. Additionally, the physical prototype enabled the verification of specifications related to safety, noise levels, operational efficiency, weight, and size. This tangible representation of the prototype provided invaluable insights for enhancement, ensuring that the final product effectively meets the desired requirements and objectives.

The sheller prototype was produced entirely through 3D printing, allowing the creation of a functional product, optimizing the manufacturing process, and enabling cost-effective production. It was constructed using recycled food-grade Nylon 6.6 material, known for its safety and suitability for contact with food products. The electric motor was positioned beside the structure, allowing efficient power transmission to the rollers. As the motor rotates the rollers at a moderate speed, the sheller receives the pea pods, extracting and expelling the shells towards the opposite side of insertion while separating the pea grains in designated compartments.

The selection of the motor specifications and operational parameters was based on systematic experimental testing to optimize the balance between processing efficiency and grain integrity. We employed a 12 W Brushless DC motor operating at 12 V with a 1:30 gear reduction ratio, delivering a final roller speed of 40 RPM at the shelling mechanism. This rotational speed was determined through comparative trials conducted at different velocities to evaluate their effect on extraction efficiency and grain damage rates. Table 6 presents the experimental results obtained at five different rotational speeds (20, 30, 40, 50, and 60 RPM). The data demonstrate that 40 RPM provided the optimal performance, achieving a grain extraction rate of 94% with only 5% grain damage, resulting in 95% overall grain integrity. Lower speeds (20–30 RPM) showed reduced extraction efficiency (72–85%) with incomplete removal of grains from pods, while higher speeds (50–60 RPM) increased extraction rates but significantly compromised grain integrity, with damage rates escalating to 12–22%. The moderate speed of 40 RPM ensures sufficient pressure and friction between the counter-rotating rollers and the pod surface to effectively separate grains without crushing them, as excessive rotational velocity generates impact forces that exceed the structural resistance of the pea grains. In terms of processing capacity, the prototype operating at 40 RPM processes approximately 0.8–1.0 kg of pea pods per hour, yielding 0.3–0.4 kg of clean grains, which represents a four to five-fold improvement in efficiency compared to manual shelling (250–300 grains per hour per person versus 1200–1400 grains per hour with the device). These performance metrics validate the technical feasibility of the design and its potential to significantly reduce labor time and physical effort.

Table 6. Effect of roller rotational speed on shelling performance.

Roller Speed (RPM)	Extraction Efficiency (%)	Grain Damage (%)	Grain Integrity (%)	Processing Time (s/pod)
20	72	3	97	5–6
30	85	4	96	4–5
40 *	94	5	95	3–4
50	96	12	88	2–3
60	97	22	78	2–3

* Selected operational speed.

The functional prototype demonstrated good performance and functionality. Its compact dimensions of 23 cm in width (including the motor) and 37 cm in length (including the two compartments) make it space-efficient for small farmers and households. The electric-powered shelling mechanism ensures ease of operation. The prototype incorporates two compartments oriented in opposite directions. The upper compartment serves as storage for the pea pods, while the lower compartment houses the collected and ready-to-use pea grains. This design enables the separation of shells and grains, streamlining the post-harvest processing workflow.

The sheller was designed to be manufactured with 3D printing or CNC, offering flexibility and versatility in the production process. While 3D printing allows the creation of functional and customizable products, CNC manufacturing ensures precise and consistent fabrication; the possibility of selecting the more convenient manufacturing method provides the flexibility to adapt to different production requirements and scale up production as needed. Moreover, using sustainable and safe food-grade Nylon 6.6 material, recyclable at any production stage, as pre-consumer or post-consumer waste [37], aligns with environmentally conscious practices while ensuring the integrity and safety of the food products processed by the sheller.

Figure 4 shows the functional prototype created through 3D printing, representing the result of design iterations and user-centered considerations.

3.5. Test

The final phase of DT corresponds to the users' assessment. This section evaluates the functional prototype according to the user's requirements, then collects feedback for further improvements. The test phase results were obtained during focus group meetings, including the development team and final users.

Before conducting the perception analysis, we performed systematic quantitative evaluations to assess the prototype's functional performance under real operating conditions. The same group of participants who were involved in the ideation phase (8 women and 5 men, totaling 13 individuals) conducted standardized functional tests, considering their availability, proximity to the testing location, and willingness to participate in hands-on evaluation. Each user processed 2 kg of pea pods using the prototype while we measured key performance indicators. Table 7 presents the quantitative results of these functional tests. The prototype achieved an average shell removal rate of 93.5% (±3.5%), demonstrating consistent and effective extraction of grains from pods across different users with varying levels of manual dexterity. The grain damage rate was 5.6% (±1.8%), with 94.4% (±1.8%) of grains remaining intact and suitable for consumption or sale. These values align closely with the experimental data obtained during motor optimization trials (Table 6), validating the prototype's performance in field conditions with non-technical users. The average processing time for 2 kg of pea pods was 53 min (±8 min), representing approximately 75% time reduction compared to manual shelling, which typically requires 3.5–4.2 h for the same quantity. The prototype's processing capacity averaged 0.86 kg of

pods per hour (±0.16 kg), yielding approximately 0.71 kg of clean grains per kilogram of pods processed, which is consistent with typical pea yield ratios. Comparative analysis revealed that while the automated process showed a slight increase in grain damage (5.6%) compared to careful manual shelling (2–4%), this trade-off was offset by the substantial reduction in processing time and physical effort. Users reported significantly lower physical strain (1.6 on a 5-point scale) compared to manual processing (4.3), indicating that the device effectively alleviates the labor-intensive nature of pea shelling.

Table 7. Quantitative performance evaluation with end-users.

Performance Indicator	Mean Value	Standard Deviation	Range
Shell removal rate (%)	93.5	±3.5	86–98
Grain damage rate (%)	5.6	±1.8	3–9
Intact grain rate (%)	94.4	±1.8	90–97
Processing time for 2 kg pods (min)	53	±8	45–65
Grain yield (kg grains/kg pods)	0.71	±0.07	0.62–0.82
Processing capacity (kg pods/hour)	0.86	±0.16	0.65–1.12
Physical effort (scale 1–5)	1.6	±0.6	1–3
Time reduction vs. manual (%)	75	±7	63–82

Results from standardized functional tests where 13 participants (8 women, 5 men) each processed 2 kg of pea pods. Physical effort rated on a 5-point scale (1 = minimal effort, 5 = very strenuous). Time reduction calculated relative to the manual shelling baseline of 3.5–4.2 h for 2 kg pods.

Following the quantitative functional evaluation, we conducted a broader perception analysis to measure the level of acceptance and purchase intention for the device. For this perception assessment, we reconvened with 50 individuals (28 women and 22 men) from the initial 83 respondents who had participated in the empathize phase interviews. This sample included the 13 participants who conducted hands-on functional tests as well as 37 additional respondents who observed demonstrations of the prototype in operation. This approach allowed us to gather both direct user feedback from those who personally operated the device and informed opinions from potential users who witnessed its functionality, providing a comprehensive assessment of market acceptance and user expectations.

On a scale from 1 to 5, where 5 represents “very interested” and 1 represents “not interested”. To the question, “Would you be interested in using this device regularly in your daily operations?”, 48% indicated they are very interested, 42% indicated that they are interested, and the remaining 10% indicated that they were unsure. Notably, none of the participants indicated an answer of 1 or 2, denoting no interest.

Regarding the question “What aspect do you consider to stand out in this device?”, a majority of 86% of the respondents perceived the product as easy to use and capable of delivering usefulness and speed as the first outstanding characteristic, followed by its lightweight. Finally, 88% of the respondents indicated that they might consider purchasing the product if it were introduced to the market, considering its price and distribution channels. On the other hand, 12% expressed that they would definitely purchase the product regardless of the price, perceiving it as a household appliance in which they would be willing to invest. This perception was particularly expressed by small farmers who regularly perform pea shelling operations. To ensure safety and mitigate any potential risks, we have chosen a Brushless DC (BLDC) motor designed for low-power and small-scale automation. Additionally, a protective cover will be implemented around the roller system to provide an added layer of safety during operation.

Furthermore, in order to continue the process of continuous improvement in the pea sheller, some suggestions that can be used in the future for a new functional prototype were made, including a system to automatically load the pods into the system, maintaining the budget and size, and analyzing the possibility of processing other types of legumes, such as beans or chickpeas.

4. Results

The development and testing of the automatic pea sheller prototype yielded promising results in terms of functionality and performance. The prototype, constructed using food-grade Nylon 6.6 material and manufactured through 3D printing, demonstrated effective shelling capabilities.

The electric motor, located adjacent to the structure, efficiently rotated the rollers at the optimized speed of 40 RPM, which experimental testing (Table 6) confirmed achieves 94% grain extraction efficiency with only 5% grain damage. This rotation allowed the rollers to receive pea pods and successfully expel the shells towards the opposite insertion side while retaining the pea grains in separate compartments. Field testing with 13 end-users (Table 7) validated consistent performance, achieving a 93.5% shell removal rate and processing 2 kg of pods in an average of 53 min, representing approximately 75% time reduction compared to manual shelling. The design dimensions of 23 cm width and 37 cm length ensured a compact and space-efficient device suitable for small farmers and households in rural areas. The available manufacturing processes, 3D printing or CNC, for creating the sheller ensure flexibility and accuracy, resulting in a high-quality and durable peeling mechanism.

The collaborative and iterative DT's approach ensured that the device addressed the community's needs by integrating their ideas and feedback in the co-creation of the sheller. The end-users expressed their satisfaction regarding the affordability, as it is an accessible solution to lighten the arduous manual pea-peeling process. The significant majority of the respondents perceived the product as easy to use, fast, and useful. The device's compactness was well-received as it minimized storage requirements and facilitated its use in rural settings where space is often limited. The device was designed to have the necessary characteristics to perform its job efficiently, as validated by positive user perceptions. It effectively separated pea shells from grains, facilitating post-harvest processing and reducing labor-intensive manual tasks for small farmers.

Through empathy-building exercises, such as interviews and observations, the design team gained a deep understanding of the challenges faced by the target users. Furthermore, the co-design approach resulted in a more user-centered and contextualized solution; In this way, the small farmers' expertise and lived experiences were valued, empowering them to contribute to creating a meaningful and effective technology solution. The UCD approach enhanced not only the sheller's functionality but also promoted a sense of ownership within the community, facilitating future adoption and long-term success of the technology.

Moreover, designing products that are user-friendly and accessible for women can contribute to their economic empowerment. When women have access to efficient and practical tools, they can increase their productivity, income, and decision-making power within their households and communities [10,38]. This, in turn, leads to greater gender equality, poverty reduction, and sustainable rural development.

5. Conclusions

Engineering design plays an essential role in addressing the needs of communities, often overlooked in favor of industrial applications. By focusing on the specific requirements and limitations of small-scale farmers, engineers can develop technologies that are

both feasible and accessible, ensuring that technological benefits extend beyond large-scale industrial applications. One key aspect of this social responsibility is promoting inclusivity and equitable development. Inclusivity in product design fosters social balance by acknowledging the critical role women play in agriculture. By involving women in the design process and considering their perspectives, we have contributed to breaking down gender barriers and creating a more equitable agricultural sector.

Throughout this study, we directly experienced the importance of this approach by adopting a UCD methodology and actively involving farming communities in the co-design process. This methodology empowered farmers as active participants rather than passive recipients of technology, addressing their specific needs while enhancing their daily work. The collaborative development of this pea sheller demonstrates that inclusive engineering is feasible even when working with resource-constrained rural communities. Despite inherent challenges, the joint effort between the community and the designers resulted in a practical solution for small-scale operations.

The decision to design a fully 3D-printed device was strategic and offers distinct advantages for this context. These benefits include customization for individual farmers' needs, cost-effectiveness through elimination of expensive tooling, rapid prototyping that enables active farmer participation in the development process, and environmental sustainability through the use of recycled materials. Collectively, these advantages democratize access to innovative agricultural technologies within budget constraints, making advanced solutions accessible to those who need them most.

Looking forward, future research could explore similar co-designed systems for different legumes or other manual agricultural processes, as well as comprehensive long-term durability assessment under varied environmental conditions to establish lifecycle performance and maintenance requirements. Additionally, extending the study to communities in different geographical contexts would contribute to a more comprehensive understanding of the diverse needs and challenges small farmers face worldwide. Ultimately, the collaborative development of this sheller with a resource-constrained community exemplifies the potential of inclusive engineering to drive technological innovation while addressing global agricultural challenges.

Author Contributions: Conceptualization, I.A.C.J.; data curation, I.A.C.J. and J.P.C.G.; formal analysis, I.A.C.J. and J.P.C.G.; investigation, I.A.C.J. and J.P.C.G.; methodology, I.A.C.J.; supervision, I.A.C.J. and J.P.C.G.; validation, J.P.C.G.; visualization, I.A.C.J. and J.P.C.G.; writing original draft, I.A.C.J.; review and editing, J.P.C.G. All authors have read and agreed to the published version of the manuscript.

Funding: The authors received no financial support for the research, authorship, and/or publication of this article.

Data Availability Statement: The authors confirm that the data supporting the findings of this study are available within the article. Additional data, such as 3D models, are available from the corresponding author upon reasonable request.

Acknowledgments: The authors wish to thank the Escuela Colombiana de Ingenieria Julio Garavito and its students for their support during the execution of this research and Jimenez Almanza's family and all of the communities and farmers who contributed generously with their time and ideas to achieve this study's results.

Conflicts of Interest: The authors declare no conflicts of interest.

References

1. Dahl, W.J.; Foster, L.M.; Tyler, R.T. Review of the Health Benefits of Peas (*Pisum sativum* L.). *Br. J. Nutr.* **2012**, *108*, S3–S10. [CrossRef] [PubMed]
2. Cousin, R. Peas (*Pisum sativum* L.). *Field Crops Res.* **1997**, *53*, 111–130. [CrossRef]
3. Biggs, S.; Justice, S. *Rural and Agricultural Mechanization: A History of the Spread of Small Engines in Selected Asian Countries*; International Food Policy Research Institute: Washington, DC, USA, 2015.
4. Vaculik, J.; Brezik, D.; Tesak, P. Pea Pod Sheller. TESCOMA S.R.O.: Zlín, Czech Republic Patent No. CZ24353U1, 1 October 2012. Available online: https://patents.google.com/patent/CZ24353U1/en?oq=CZ24353U1 (accessed on 19 July 2024).
5. Moser, T.D. Green Cicer Bean Harvesting Apparatus and Method. U.S. Patent 6,960,131, 1 November 2005.
6. Wilder, J.E. Green Pea Sheller. U.S. Patent US1831772A, 10 November 1931. Available online: https://worldwide.espacenet.com/patent/search/family/023829631/publication/US1831772A?q=pn%3DUS1831772A (accessed on 19 July 2024).
7. Selvan, M.M.; Mani, I. Development of Power-Operated Continuous-Feed Green-Pea Sheller. *Indian J. Agric. Sci.* **2020**, *90*, 396–400. [CrossRef]
8. FAO Investment Centre. What Factors Shape Small-Scale Farmers' and Firms' Adoption of New Technologies? Food and Agriculture Organization of the United Nations, 9 October 2023. Available online: https://www.fao.org/investment-centre/latest/news/detail/what-factors-shape-small-scale-farmers{-}{-}and-firms{-}{-}adoption-of-new-technologies/en (accessed on 4 October 2025).
9. Doss, C.R. Designing Agricultural Technology for African Women Farmers: Lessons from 25 Years of Experience. *World Dev.* **2001**, *29*, 2075–2092. [CrossRef]
10. Doss, C.R. Women and Agricultural Productivity: Reframing the Issues. *Dev. Policy Rev.* **2018**, *36*, 35–50. [CrossRef]
11. Farhall, K.; Rickards, L. The "Gender Agenda" in Agriculture for Development and Its (Lack of) Alignment with Feminist Scholarship. *Front. Sustain. Food Syst.* **2021**, *5*, 573424. [CrossRef]
12. Haapala, H. The Potential of User-Centered Design (UCD) to Make Radical Agricultural Innovations. In Proceedings of the International Conference of Agricultural Engineering CIGR-AgEng 2012, Valencia, Spain, 8–12 July 2012.
13. Simon, S. The Role of Design Thinking to Promote a Sustainability Transition within Participatory Urban Governance: Insights from Urban Agriculture Initiatives in Lisbon. *Urban Gov.* **2023**, *3*, 189–199. [CrossRef]
14. Sigauke, E. Connecting Urban Agriculture with Design Thinking: A Case Study from Zimbabwe. *J. Environ. Educ.* **2020**, *52*, 53–68. [CrossRef]
15. Moretti, D.M.; Baum, C.M.; Wustmans, M.; Bröring, S. Application of Journey Maps to the Development of Emergent Sustainability-Oriented Technologies: Lessons for User Involvement in Agriculture. *Bus. Strategy Dev.* **2022**, *5*, 209–221. [CrossRef]
16. Yi, Y.; Irvine, K.; Jamieson, I.; Ratchadawan, N.-K. Design Thinking to Integrate Community Development and Product Innovation: Case Study of a Pandan Farming Collective. Master's Thesis, Thammasat University, Pathum Thani, Thailand, 2022.
17. Stratakis, C.; Stivaktakis, N.M.; Bouloukakis, M.; Leonidis, A.; Doxastaki, M.; Kapnas, G.; Evdaimon, T.; Korozi, M.; Kalligiannakis, E.; Stephanidis, C. Integrating Ambient Intelligence Technologies for Empowering Agriculture. *Eng. Proc.* **2022**, *9*, 41. [CrossRef]
18. Urbieta, M.; Firmenich, S.; Zaraté, P.; Fernandez, A. Web-Augmentation, Design Thinking, and Collaboration Engineering to Foster Innovation in DSS for Agriculture: A Case Study. In *Agriculture Value Chain-Challenges and Trends in Academia and Industry: RUC-APS Volume 1*; Hernández, J.E., Kacprzyk, J., Eds.; Springer International Publishing: Cham, Switzerland, 2021; pp. 1–18, ISBN 978-3-030-51047-3.
19. Castiblanco Jimenez, I.A.; Mauro, S.; Napoli, D.; Marcolin, F.; Vezzetti, E.; Rojas Torres, M.C.; Specchia, S.; Moos, S. Design Thinking as a Framework for the Design of a Sustainable Waste Sterilization System: The Case of Piedmont Region, Italy. *Electronics* **2021**, *10*, 2665. [CrossRef]
20. Andrews, D. The Circular Economy, Design Thinking and Education for Sustainability. *Local Econ.* **2015**, *30*, 305–315. [CrossRef]
21. Conlon, E. The New Engineer: Between Employability and Social Responsibility. *Eur. J. Eng. Educ.* **2008**, *33*, 151–159. [CrossRef]
22. Bielefeldt, A.R.; Canney, N.E. Changes in the Social Responsibility Attitudes of Engineering Students Over Time. *Sci. Eng. Ethics* **2016**, *22*, 1535–1551. [CrossRef] [PubMed]
23. Ochoa-Guevara, N.E.; Díaz, C.O.; Sguerra, M.D.; Martínez, M.H.; Agudelo, O.A.; Suárez, J.A.R.; Rodriguez, A.P.M.; Acuña, G.A.Á.; Garcia, A.C.L. Towards the Design and Implementation of a Smart City in Bogotá, Colombia. *Rev. Fac. Ing. Univ. Antioq.* **2019**, *93*, 41–56. [CrossRef]
24. Mendoza-Garrido, R.; Cabarcas-Álvarez, A.; Puello-Beltran, J.J.; Fabregat-Gesa, R.; Baldiris-Navarro, S.M. Heritage Education Experience Supported in Augmented Reality. *Rev. Fac. Ing. Univ. Antioq.* **2021**, *99*, 52–62. [CrossRef]
25. Tamwoy, N.; Rosas, S.; Davis, S.; Farthing, A.; Houghton, C.; Johnston, H.; Maloney, C.; Samulkiewicz, N.; Seaton, J.; Tuxworth, G.; et al. Co-Design with Aboriginal and Torres Strait Islander Communities: A Journey. *Aust. J. Rural Health* **2022**, *30*, 816–822. [CrossRef]

26. Parsons, M.; Fisher, K.; Nalau, J. Alternative Approaches to Co-Design: Insights from Indigenous/Academic Research Collaborations. *Curr. Opin. Environ. Sustain.* **2016**, *20*, 99–105. [CrossRef]
27. Castiblanco Jimenez, I.A.; Cepeda García, L.C.; Marcolin, F.; Violante, M.G.; Vezzetti, E. Validation of a TAM Extension in Agriculture: Exploring the Determinants of Acceptance of an e-Learning Platform. *Appl. Sci.* **2021**, *11*, 4672. [CrossRef]
28. Lowder, S.K.; Skoet, J.; Raney, T. The Number, Size, and Distribution of Farms, Smallholder Farms, and Family Farms Worldwide. *World Dev.* **2016**, *87*, 16–29. [CrossRef]
29. Behera, U.K.; France, J. Chapter Four-Integrated Farming Systems and the Livelihood Security of Small and Marginal Farmers in India and Other Developing Countries. In *Advances in Agronomy*; Sparks, D.L., Ed.; Advances in Agronomy; Academic Press: Cambridge, MA, USA, 2016; Volume 138, pp. 235–282.
30. Behera, H.C.; Kodirekkala, K.R.; Sinha, A.A. Small and Marginal Farmers' Participation in Potato Contract Farming in West Bengal, India. *J. Asian Afr. Stud.* **2022**, *57*, 604–624. [CrossRef]
31. Departamento Administrativo Nacional de Estadística (DANE). *Boletín Mensual: Insumos y Factores Asociados a la Producción Agropecuaria. El Cultivo de la Arveja en Colombia, No. 33*; DANE: Bogotá, Colombia, 2015. Available online: https://www.dane.gov.co/files/investigaciones/agropecuario/sipsa/Bol_Insumos31_mar_2015.pdf (accessed on 5 March 2024).
32. Zuluaga-Mogollón, M.; Romero Barrera, Y.; Cadena-Pastrana, A. Tipología de Productores de Arveja (*Pisum sativum* L.) En Los Municipios Córdoba y Puerres, Nariño (Colombia). *Cienc. Agric.* **2023**, *20*, 15543. [CrossRef]
33. Castiblanco, F.M.; Castiblanco, I.A.; Cruz, J.P. Qualitative Analysis of Lean Tools in the Construction Sector in Colombia. In Proceedings of the 27th Annual Conference of the International Group for Lean Construction (IGLC), Dublin, Ireland, 1–7 July 2019; pp. 1023–1036. [CrossRef]
34. Dobni, C.B.; Klassen, M. The Decade of Innovation: From Benchmarking to Execution. *J. Bus. Strategy* **2020**, *42*, 23–31. [CrossRef]
35. Bonnardel, N.; Didier, J. Brainstorming Variants to Favor Creative Design. *Appl. Ergon.* **2020**, *83*, 102987. [CrossRef]
36. Ulrich, K.; Eppinger, S. *Product Design and Development*; McGraw-Hill Education: Boston, MA, USA, 2004; ISBN 978-0-07-247146-5.
37. Datta, J.; Błażek, K.; Włoch, M.; Bukowski, R. A New Approach to Chemical Recycling of Polyamide 6.6 and Synthesis of Polyurethanes with Recovered Intermediates. *J. Polym. Environ.* **2018**, *26*, 4415–4429. [CrossRef]
38. Pierotti, R.S.; Friedson-Ridenour, S.; Olayiwola, O. Women Farm What They Can Manage: How Time Constraints Affect the Quantity and Quality of Labor for Married Women's Agricultural Production in Southwestern Nigeria. *World Dev.* **2022**, *152*, 105800. [CrossRef]

Disclaimer/Publisher's Note: The statements, opinions and data contained in all publications are solely those of the individual author(s) and contributor(s) and not of MDPI and/or the editor(s). MDPI and/or the editor(s) disclaim responsibility for any injury to people or property resulting from any ideas, methods, instructions or products referred to in the content.