Journal of Fiber Bioengineering and Informatics 6:4 (2013) 369–381
doi:10.3993/jfbi12201303

Piezoelectric Polymer and Piezocapacitive Nanoweb Based Sensors for Monitoring Vital Signals and Energy Expenditure in Smart Textiles

Soyoung Lee [a], Yujin Ahn [a], Arunanand Prabu [a,b], Kapjin Kim [a,*]

[a] *Department of Advanced Materials Engineering for Information & Electronics, College of Engineering, Kyung Hee University, Yongin-si, Gyeonggi-do 446-701, South Korea*

[b] *Department of Chemistry, VIT University, Vellore, India*

Abstract

"Smart textiles", also known as electronic or e-textiles contain embedded sensors capable of monitoring vital signals such as ECG, EMG, respiratory behaviour and are usually fabricated using rigid semiconductors. In this study, we developed a flexible Physiological Sensing Belt (PSB) by embedding silicone rubber/carbon black/conductive carbon layer coated Polyvinylidene Fluoride (PVDF) film between the elastic textile bands for monitoring respiration and the movement of thigh muscles. With an average peak-to-peak interval of 3 sec, the respiration rate could be evaluated to be 20 min^{-1}. We also developed a novel hybrid sensor using PVDF and Thermoplastic Polyurethane (TPU) electrospun nanofiber webs stacked on each other and capable of measuring both static and dynamic pressure simultaneously within all frequency ranges. Based on the samples used, we were able to measure the walking speed of the subject at 4, 336 steps/h and 0.693 m/step at the speed of 3 km/h and with 6, 656 steps/h and 0.751 m/step at the speed of 5 km/h. Overall, when compared to the existing commercially available pressure sensors, the PVDF and TPU nanofiber web based hybrid sensor developed in our study has advantages of high sensitivity, nanoscale thickness, lower hysteresis curve in pressure-capacitance, and can be easily converged with any fabric or textiles.

Keywords: Polyvinylidene Fluoride; Polyurethane; Electrospinning; Nanofiber Webs; Smart Textiles

1 Introduction

"Smart textiles" is the generic term used when textiles or apparels embedded with sensors generate electric signals which can be used to monitor vital signals such as ECG, EMG, respiration, etc. Smart textile has functions to care of the person's physical conditions and to save life by alarming to a nearby hospital through a smart phone or PC, wirelessly [1, 2]. However, existing sensors for measuring vital signals in smart textiles are based on rigid semiconductors, which have no flexibility and also are incompatibile with the fabric. Conductive Ag/AgCl and other gel-type

*Corresponding author.
Email address: kjkim@khu.ac.kr (Kapjin Kim).

1940–8676 / Copyright © 2013 Binary Information Press & Textile Bioengineering and Informatics Society
December 2013

electrodes used for monitoring ECG or EMG also possess the disadvantage of attaching directly to the skin, resulting in side effects during long-term use [3]. Considering the above limitations with existing sensors, many research groups have recently focused on commercialization of smart textiles embedded with sensors or electrodes based on organic polymers or electrospun nanofiber webs [4-6].

Among the organic materials, Polyvinylidene Fluoride (PVDF) has been widely investigated as a tactile sensor material due to its high piezo-, pyro- and ferroelectric properties. The β-crystalline structure in the PVDF allows tighter packing density and more dipolar alignment giving the polymer its strong piezoelectric properties [7]. On the other hand, Thermoplastic Polyurethanes (TPU) can be used as piezocapacitive sensors for monitoring the loading on limbs or on other body parts. As the weight of a patient is applied to a measuring capacitor, there is a relatively linear increase of capacitance with applied weight which permits the use of simple and low cost electrical circuits to generate a signal that is directly proportional to the applied weight [8]. In spite of this potential, TPUs were overlooked during most of the last decade in favor of PVDF and other piezoelectric materials. Hence in the present study, we developed various types of PVDF and PU based sensors as well as a hybrid sensor involving both PVDF and PU nanowebs which can be applied to smart textiles for monitoring vital signals during resting or exercising.

2 Experimental

2.1 Materials

PVDF (Kynar® 761, M_w=370,000), N, N-dimethylformamide (DMF), acetone and Tetrahydrofuran (THF) were purchased from Samchun Inc., Korea. Three types of TPUs (Estane® R190A, Estane® S190A-43 and Estane® T470A-3) were obtained from Lubrizol, USA. Nickel-copper plated adhesive polyester fabric (J. S Korea Inc., Korea) was used as electrodes for fabricating pressure sensors. All the materials were used as received without any further modification.

2.2 Preparation of Electrospun Nanoweb

PVDF solution was prepared by dissolving 12 wt.-% (w/v) of PVDF in 6:4 (v/v) DMF: acetone mixture at 60 °C for 4 h under continuous stirring, whereas PU solutions were prepared by dissolving 12 wt.-% (w/v) of PU in 6:4 (v/v) DMF: THF mixture at 60 °C under stirring for 24 h. The electrospinning set-up consisted of a syringe pump, needle (23G), high voltage power supply and drum collector. During electrospinning, a positive DC voltage of 20 kV was applied to the PVDF solution at a flow rate of 1.0 ml/h, and in the case of TPU solution, the voltage was set at 17 kV and a flow rate of 1.5 ml/h. For both the solutions, the tip-to-collector distance (TCD) was maintained at 10 cm.

2.3 Fabrication and Measurement of Pressure Sensors

Piezoelectric and piezocapacitive sensors were fabricated by sticking nickel-copper plated polyester fabric to both sides of PVDF and TPU nanofiber webs. The simplified equivalent circuit diagram for detecting the piezoelectric signal is shown in Fig. 1. The output electrical signal generated by

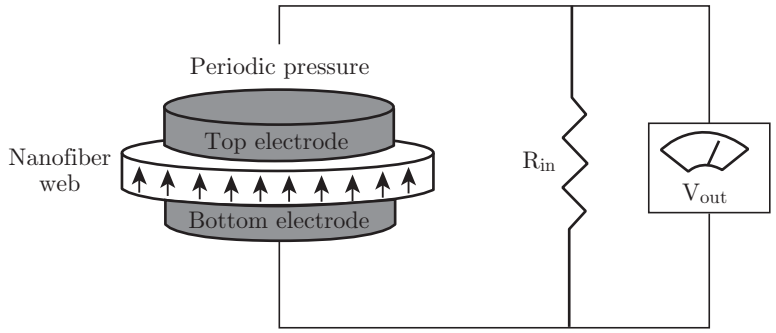

Fig. 1: Equivalent circuit diagram for detecting the piezoelectric signal

imparting sinusoidal pressure on the sensor was acquired in the voltage mode of the preamplifier (Piezo Film Lab Amplifier, Korea) with an input resistor (R_{in}) of 100 MΩ through NIDAQ board and saved in the PC.

Piezocapacitance can be measured using a circuit shown in Fig. 2 by applying a sine wave with an amplitude of 4.7 $V_{p\text{-}p}$ and frequency of 10 kHz to the PU nanoweb sensor connected to resistor (R_1) in series. The output voltage at the point 1 is a sine wave with the same frequency and reduced $V_{p\text{-}p}$ value until t=t_0 in the absence of external pressure. As the constant external force is applied to the PU nanoweb sensor during the interval of t_0 to t_1, a modulated sine wave with the same frequency and increased amplitude due to an increase in the capacitance of the sensor ($C[pF] = \frac{\varepsilon_0 \varepsilon A}{d}$, where the capacitance (C) is inversely proportional to thickness (d)). When the external force is removed at time t_1, the output signal at the point 1 returns

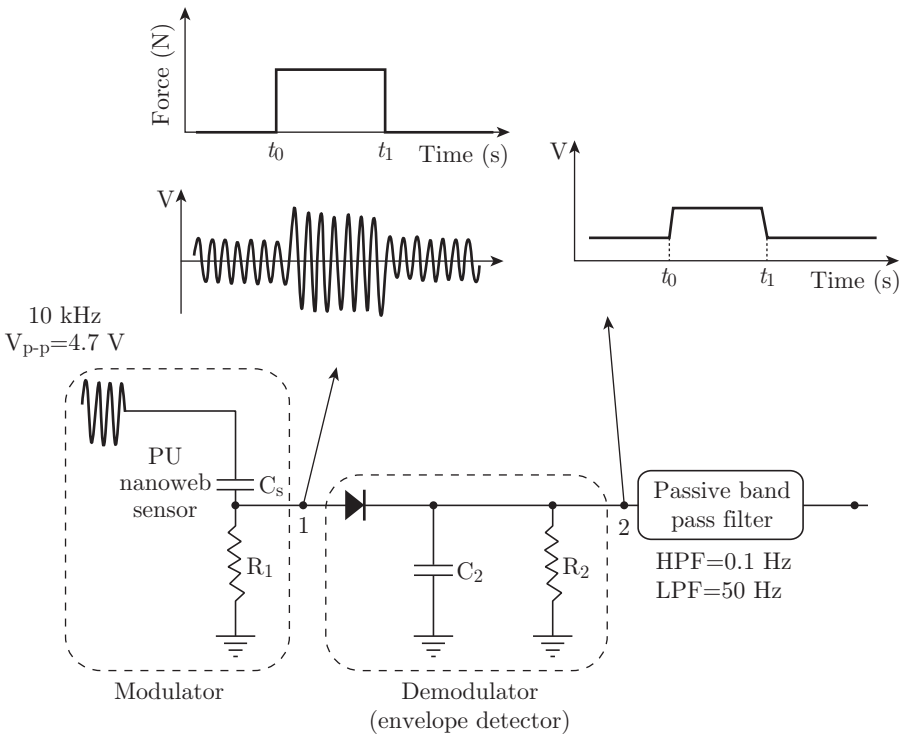

Fig. 2: Equivalent circuit diagram for detecting the piezocapacitive signal

to the signal state observed prior to applying the pressure and the sensor thickness also returns to its original state. While the output signal passes through a demodulator (envelop detector) circuit, from the point 2 one can obtain an output signal which is the positive envelope of the original modulated signal through the appropriate selection of R_2 and C_2. Finally, we obtained the noise filtered output signals by passing the output signal at the point 2 through a passive band pass filter having the cut-off-frequency of 0.1 Hz for High Pass Filtering (HPF) and the cut-off-frequency of 50 Hz for Low Pass Filtering (LPF). When we measured the piezocapacitive signals from 6 piezocapacitive nanoweb sensors installed in a pair of smart shoes during walking or running (Fig. 10), we used a home-made circuit which can measure 6 piezocapacitive signals simultaneously.

3 Results and Discussion

3.1 ECG Measurement Using PVDF Nanoweb Based Dry-type Electrode

Electrocardiogram (ECG) measures the electrical activity from our heartbeat that is generated during contraction and release of a myocardium, and is an important vital signal for monitoring the personal health care. In the present work, we prepared a conductive PVDF nanofiber web fabricated through electrospinning and electroless silver plating methods for using as a dry-type electrode for ECG measurement. The detailed fabrication process is given elsewhere [9]. As shown in Fig. 3, ECG signals from silver-plated PVDF nanofiber web based sensor could be obtained identically and more clearly in comparison to the conventional Ag/AgCl gel electrode during walking at 5 km/h. With an average period of about 0.818 sec between each ECG signal wavelet from Fig. 3 (a), the heart beat rate can be estimated to be about 73 beats per minute. Furthermore, electroless silver-plated PVDF nanofiber web based sensor can detect EMG signals as well as ECG signals by contraction and release of muscles [9].

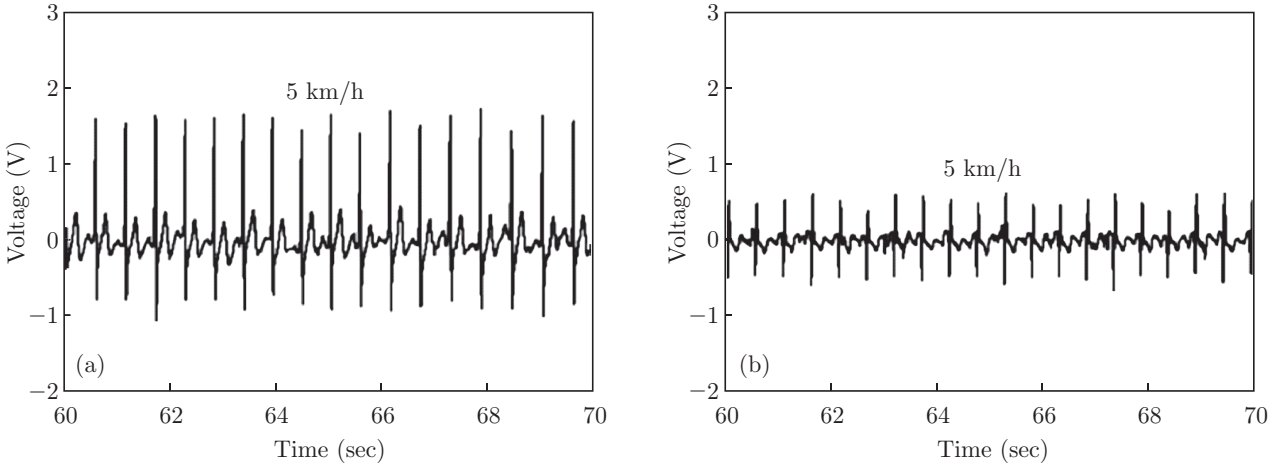

Fig. 3: ECG signals obtained during walking on a flat treadmill (5 km/h) using (a) silver-plated nanoweb sensor after ultrasonic welding and (b) Ag/AgCl gel electrode

3.2 Piezoelectric Thin Polymer Film-based Sensor for Monitoring Vital Health Signals

3.2.1 Respiration Signals and Pulse Wave Velocity Measurement

Respiratory signal involving change in circumference of the chest or the abdomen is also important in vital signals. Respiratory inductance plethysmography belt [10], strain gauge embedded elastic belt [11], and gas pressure sensor attached respiration monitoring belt [12], which can be wrapped around the chest or the abdomen have been developed to monitor respiration, but the size of these sensor belts is too large to be embedded in smart apparels.

In the present study, we prepared a prototype of corona-poled PVDF film sensor with silver-paste layer at the top and bottom sides as shown in Fig. 4 (a), and coated with silicone rubber/carbon black/conductive carbon layer for Electromagnetic Interference (EMI) shielding and increased toughness (Fig. 4 (b) and (c)). Further, the Physiological Sensing Belt (PSB) was fabricated by embedding the coated PVDF film between elastic textile bands (Fig. 4 (d)). Since silicone rubber/carbon black/conductive carbon layer coated PVDF film is sticking to elastic textile bands, changes in the orientation of CF_2 dipoles can generate current by elongating the PVDF

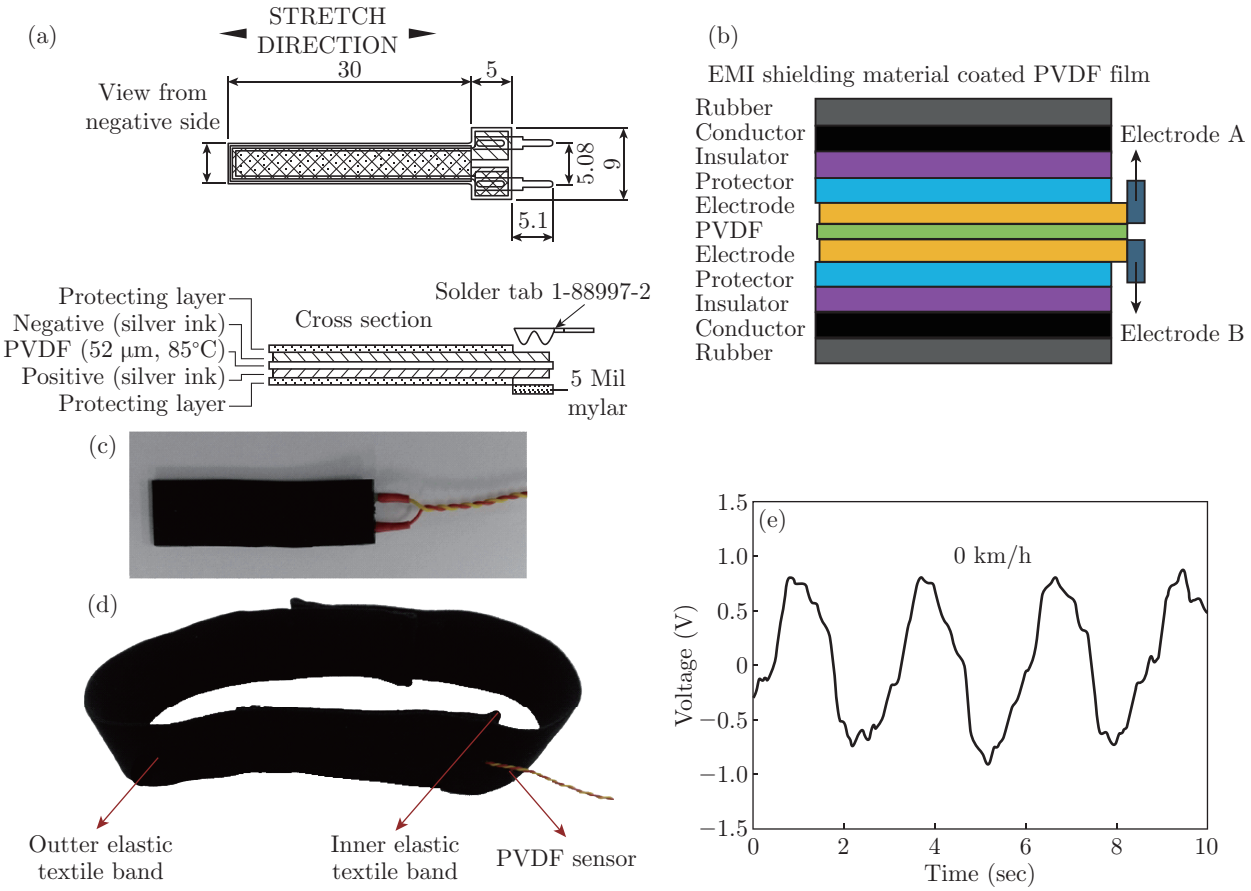

Fig. 4: (a) Front and cross-sectional views of a starting PVDF film, (b) cross-sectional view of silicone rubber/carbon black/conductive carbon layer coated PVDF film, (c) actual photo of object (b), (d) actual photo of PSB with sensor (c) inserted between two elastic textile bands, and (e) respiration signals from PSB tied around the chest at rest

thin film along the longitudinal direction during breathing. Therefore, signals from respiration based on expansion and shrinkage of the chest can be obtained by only wearing the PSB around the chest or the abdomen [13-18]. Fig. 4 (e) shows respiration signal from the PSB around the chest at rest. With an average peak-to-peak interval of 3 sec, the respiration rate is evaluated to be 20 min^{-1}.

PSB can also measure Pulse Wave Velocity (PWV) from pulse transit time from heart to PSB-wrapped parts of body through piezoelectric signals based on expansion and contraction of artery. Fig. 5 indicates time difference when blood reaches from heart to the neck, head, wrist, and ankle. Since neck, head, wrist, and ankle are gradually distant from heart, expanded signals from PSB wrapped around each part appeared in that order. From these plots, suitability of PSB for evaluating vascular elasticity, ageing, and blocking was confirmed without any discomfort [15].

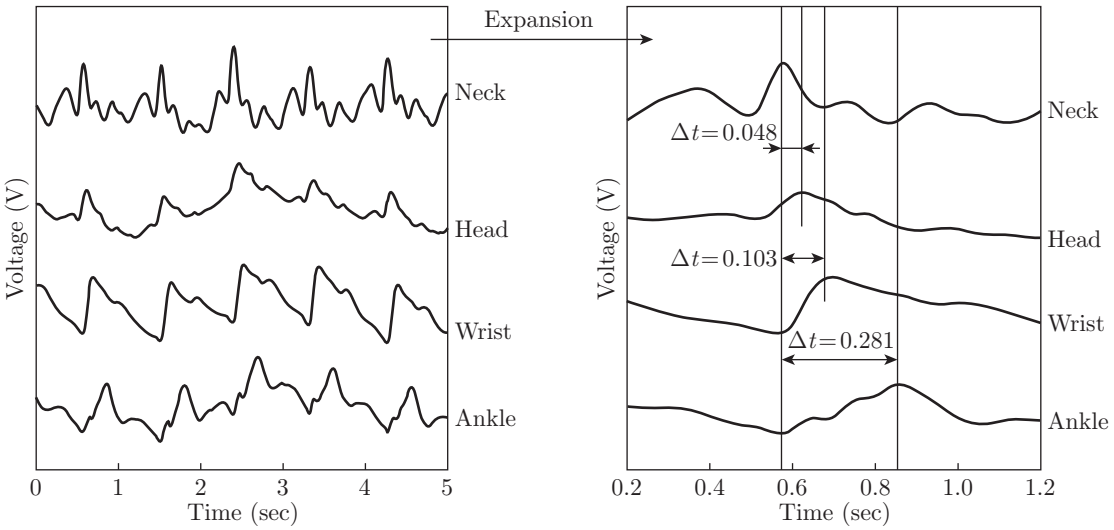

Fig. 5: PWV signals of neck, head, wrist, and ankle from PSB

3.2.2 Signals from Thigh Muscle Using PSB Sensor and Evaluation of Energy Expenditure

Longitudinal elongation of silicon rubber coated PVDF thin film in elastic belt can also detect the movement of thigh muscles and evaluate the energy expenditure of PSB wearer. Pedometer [19], tri-axial accelerometers [20], and CO_2 measuring system during metabolism [21] were used in previous reports for evaluating the physical energy consumed. However, these methods have disadvantages of cost, rigidity, and discomfort.

In our study, piezoelectric signals from PSB strapped around thigh by the movement of thigh muscles were monitored, since thigh muscles deform with every foot step. Furthermore, generated positive and negative piezoelectric signals from PVDF by pressing and releasing can be used to evaluate energy expenditure by calculation the area of piezoelectric signals curve as shown in Fig. 6. Measured piezoelectric signals must be changed in positive value [$|V(t)|$] from rectifying or square-rooting [$\sqrt{V(t)^2}$], since total area under the curve from integration becomes 0. Then, integration value of $\int_0^t |V(t)|dt$ or $\int_0^t \sqrt{V(t)^2 dt}$ can be used to evaluate the energy consumed during time t. Integrated values of rectified piezoelectric signal from PSB showed straight line with increasing time. The possibility to measure energy expenditure was also con-

firmed by calibration with RER (respiratory exchange ratio) obtained from the ratio of exhausted $CO_2(VCO_2)$/consumed $O_2(VO_2)$ [22]. Energy expenditure can be calculated using the equation; Energy expenditure (kcal/min)=[(1.1×PER)+3.9]×VO_2 (L/min). As shown in Fig. 6 (c), the integrated values of rectified piezoelectric signals from the PSB wrapped around the thigh for 5 min at various walking speeds have linear relation to the total energy expenditure calculated from the measured RER and VO_2 values.

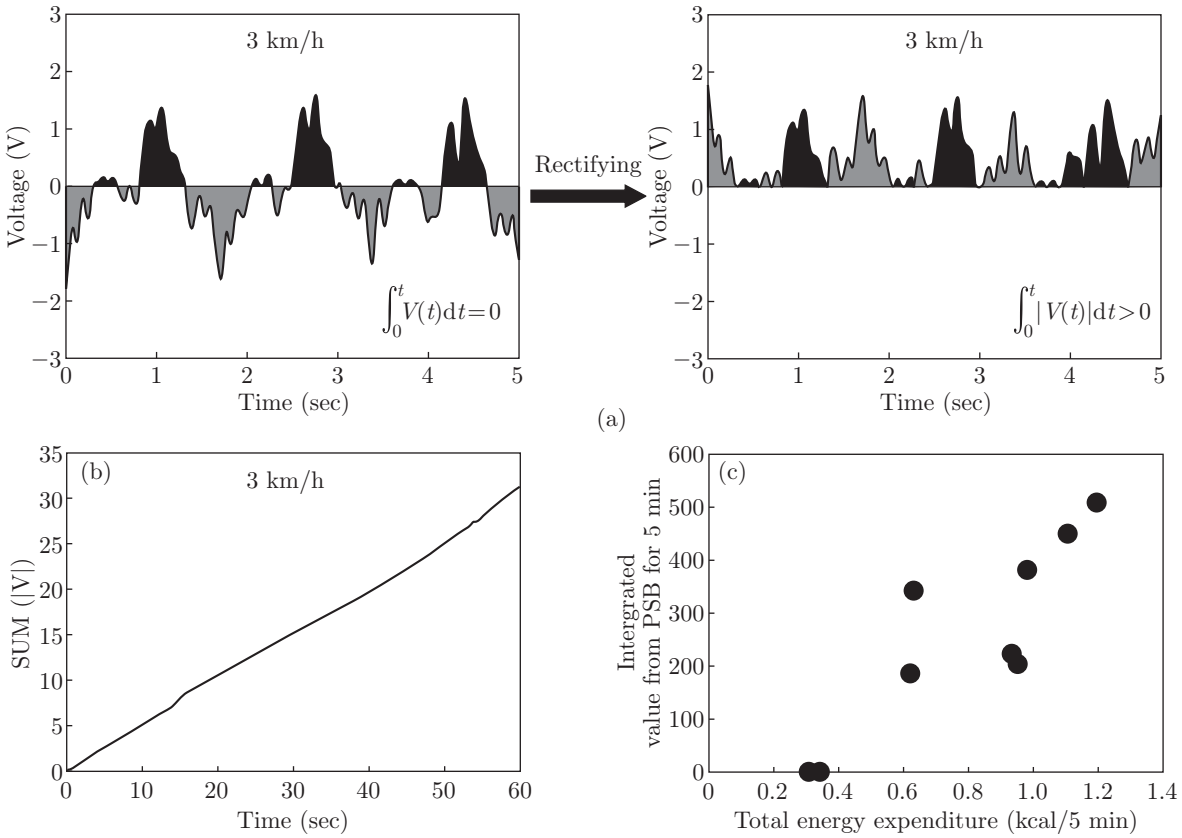

Fig. 6: (a) Typical piezoelectric signal from the PSB strapped around the thigh and its rectified curve as a function of time, (b) The integrated value of rectified piezoelectric signal from the PSB strapped around the thigh vs. time, and (c) Integrated value from the PSB strapped around the thigh for 5 min at various walking speeds vs. total energy expenditure calculated from the measured VO_2 and VCO_2 values

3.3 Nanofiber Web-based Pressure Sensor Through Electrospinning

3.3.1 Piezoelectric Properties of PVDF Nanofiber Web-based Pressure Sensor

PVDF films used as piezoelectric sensor subjected to "poling" process exhibit preferential CF_2 dipole along the direction of the applied electric field. Poled PVDF film has the characteristics of generating current when subjected to external pressure even after the external electric field (poling) is removed, which is attributed to the existence of remnant polarization of its dipoles. Poled PVDF film, which can experience the changing thickness of film by electric field below coercive voltage, is also used as an actuator. Recently, as displayed in Fig. 7, we exploited why PVDF nanofiber webs formed through electrospinning exhibit piezoelectric properties. In other

words, voltage or current can be generated by preferential orientation of CF_2 dipoles during the electrospinning process without any further direct or corona poling [23]. Charging ability of the capacitance-type nanogenerator made of PVDF nanofiber web with high β-phase content can be evaluated from the build-up voltage increase across the capacitor with increasing time when a periodic pressure is applied to the electrospun PVDF nanoweb as shown in Fig. 8 [24]. We found that under the same sinusoidal force, the output power is 5.2 pW and 23 pW for 50 and 110 μm thickness, respectively.

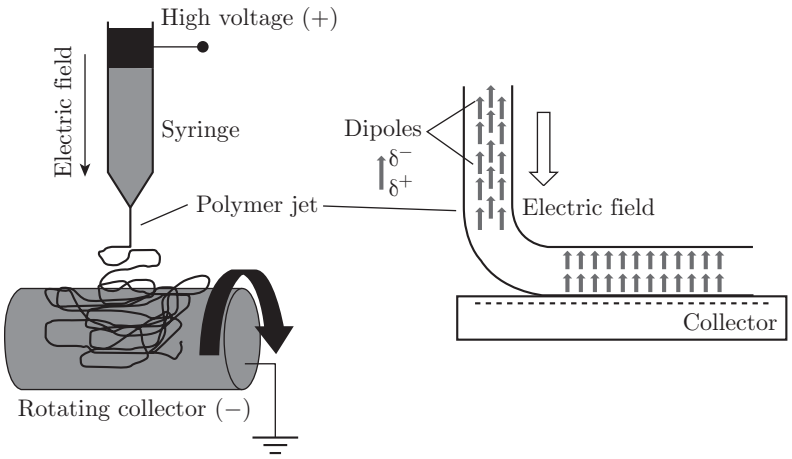

Fig. 7: Schematic diagram of electrospinning experimental set-up (left) and enlarged view of the induced dipoles in the polymer jet and the nanofiber on the collector (right)

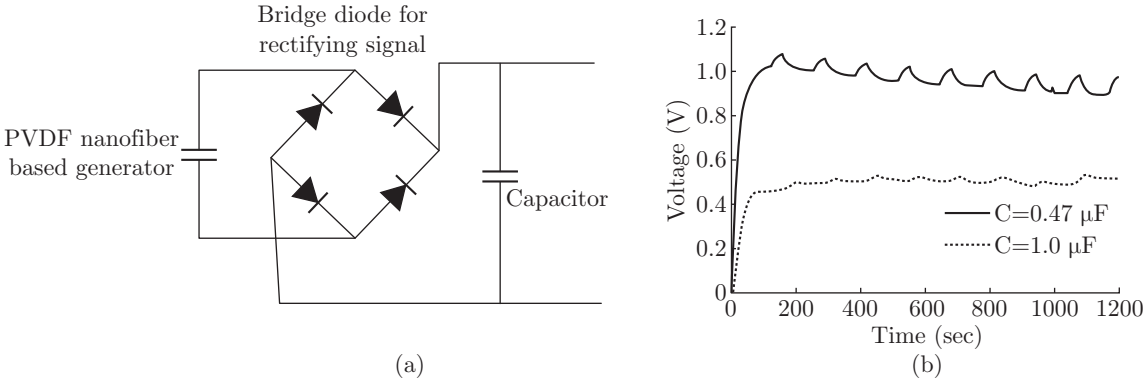

Fig. 8: (a) Schematic diagram of capacitor charging circuit using an electrospun PVDF nanofiber based generator; (b) Voltage build-up curve of the capacitor while the sinusoidal force is imparted to the electrospun PVDF nanofiber based generator. Imparting force = 50 N; area of the electrode = 0.78 cm^2, force imparting frequency = 1 Hz, thickness of multi-layered PVDF nanofiber web with the same dipole direction = 420 μm

To see the feasibility of application in a flexible pressure sensor, we studied the piezoelectric properties of PVDF nanofiber web fabricated by sticking electrode made of nickel-copper plated polyester fabric to both sides of nanofiber web using the circuit shown in Fig. 1. The piezoelectric response as seen in Fig. 9 indicates that the output piezoelectric signal can be enhanced by increasing the external force, which is an evidence that the electrospun PVDF nanofiber web can be used as a flexible pressure sensor as well as a flexible nanogenerator.

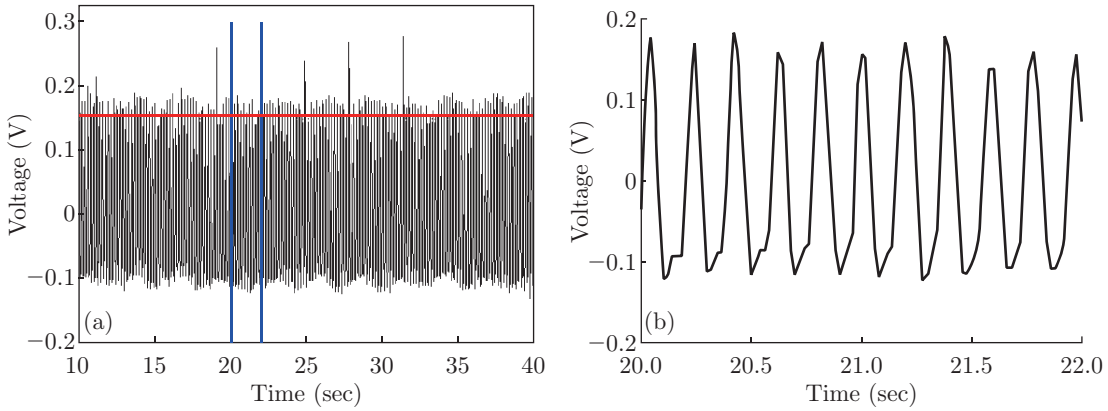

Fig. 9: (a) Output voltage from the 112 μm thick PVDF nanofiber web having the circular active area of diameter 1.2 cm for the periodic force (20 N) of 6 Hz; (b) The enlarged view of the output signal from 20-22 sec

3.3.2 Piezocapacitive Properties of TPU Nanofiber Web-based Pressure Sensor

Polyurethane (PU) has superior resilience in comparison to other thermoplastic polymers. In this study, three types of Thermoplastic PU (TPU) based nanofiber webs with nanoscale thickness and high resilience were fabricated through electrospinning. These TPU nanofiber webs can be used as piezocapacitive sensors which show an increase in capacitance with decreasing thickness when subjected to external pressure. Compared to existing PU foam sheet for pressure sensor, nanofiber webs developed in our study have advantages of high sensitivity, nanoscale thickness, and low hysteresis curve in pressure-capacitance. Therefore, TPU nanofiber web-based piezocapacitive sensors were applied to smart insole. Fig. 10 exhibits smart shoes embedded with TPU (Estane® R190A) nanofiber web based pressure sensors and piezocapacitive signals with 6 channels from smart insoles. Since sensors had high flexibility, wearability and lightweight, smart insole embedded in shoes can measure body weight and pattern of walking from change in capacitance by foot pressure without any discomfort during walking or running [25].

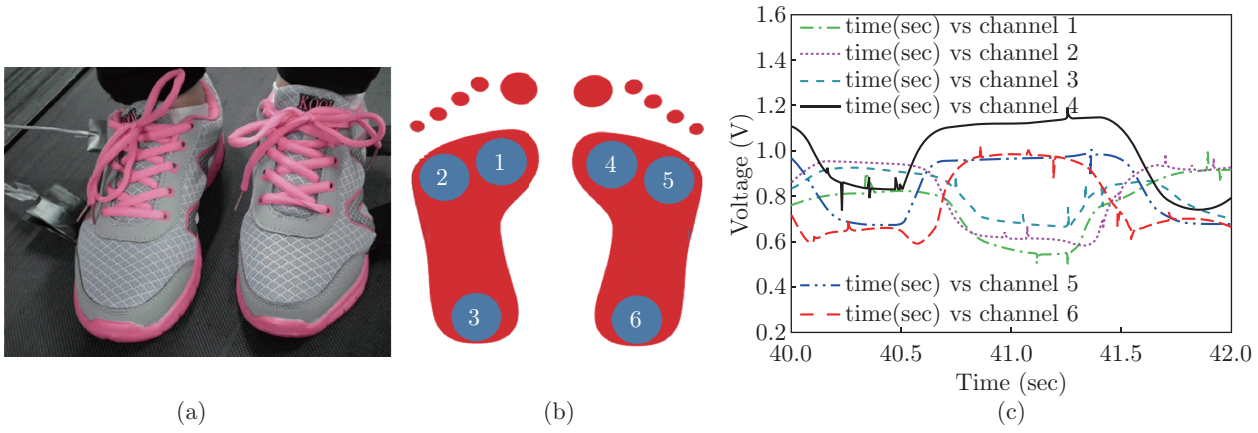

Fig. 10: (a) smart shoes embedded with pressure-sensing insole; (b) positions of 6 piezocapacitive sensors based on TPU nanofiber web; (c) piezocapacitive signals from smart insole composed of TPU nanofiber web

However, evaluating method of energy expenditure from piezocapacitive signals is different from piezoelectric signals of PSB, because integrated value of rectified piezocapacitive signals

from smart insoles was larger while standing than while walking for piezocapacitive signals with only positive signals from change in thickness by external pressure. Therefore, integrated value $\left[\int_0^t \left|\frac{dV(t)}{dt}\right| dt\right]$ of absolute value from slope of piezocapacitive signals $\left|\frac{dV(t)}{dt}\right|$ was used for calculating energy expenditure while standing and walking. "0" from no change in slope was obtained when standing, whereas the straight line with positive slope was seen with an increase of t while walking.

3.3.3 A Novel Hybrid Sensor Capable of Measuring Static and Dynamic Pressure Simultaneously Using Electrospun Nanofiber Webs

PVDF nanofiber web based piezoelectric sensor can detect only dynamic pressure with very broad frequency due to preferential CF_2 dipole change, whereas TPU nanofiber web based piezocapacitive sensor can detect both static and dynamic pressure with relatively low frequency through capacitance change in TPU nanoweb. In this study, we also fabricated hybrid sensor composed of both PVDF and TPU nanofiber webs stacked on each other, as illustrated in Fig. 11. It can measure pressure within all frequency ranges and simultaneously when applying static or dynamic pressure. Body weight and energy expenditure measurements during walking or running could be also demonstrated in this study using hybrid sensor applied to smart insole.

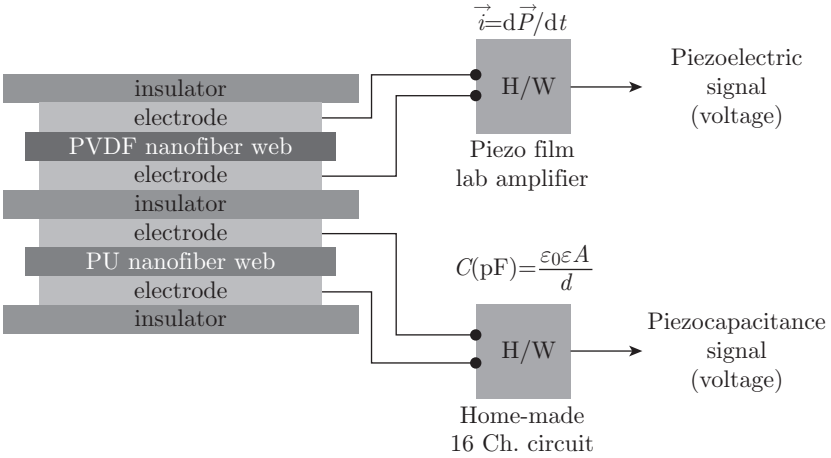

Fig. 11: Schematic diagram of a hybrid sensor composed of PVDF and TPU nanofiber webs stacked on each other for measuring static pressure and dynamic pressure

Fig. 12 shows piezocapacitive and piezoelectric signals simultaneously measured as a function of time when a subject is walking on the treadmill at the speed of 5 km/h putting on smart shoes with pressure-sensing insoles composed of the hybrid sensors shown in Fig. 11. One can see that piezo signal from the sensor 3 located in the rear sole of the right foot appears first, and then piezo signals from sensors 2 and 3 appear consecutively irrespective of the sensor type. The sequentially iterative signals of the 3→2→1 close loop are observed continuously while walking. As the sensor 2 is very close to sensor 1, the peak time difference between the sensors 2 and 1 is negligibly small. The peak time difference between the sensors 2 and 3 is about 0.3 second at the speed of 5 km/h. Fig. 13 shows piezo-response signals from the hybrid sensor 3 as a function of walking speed. One can see that the frequency increases with walking speed regardless of sensor type. From the Fig. 13, one can estimate that the subject walks with 4,336 steps/h and 0.693

m/step at the speed of 3 km/h and with 6,656 steps/h and 0.751 m/step at the speed of 5 km/h.

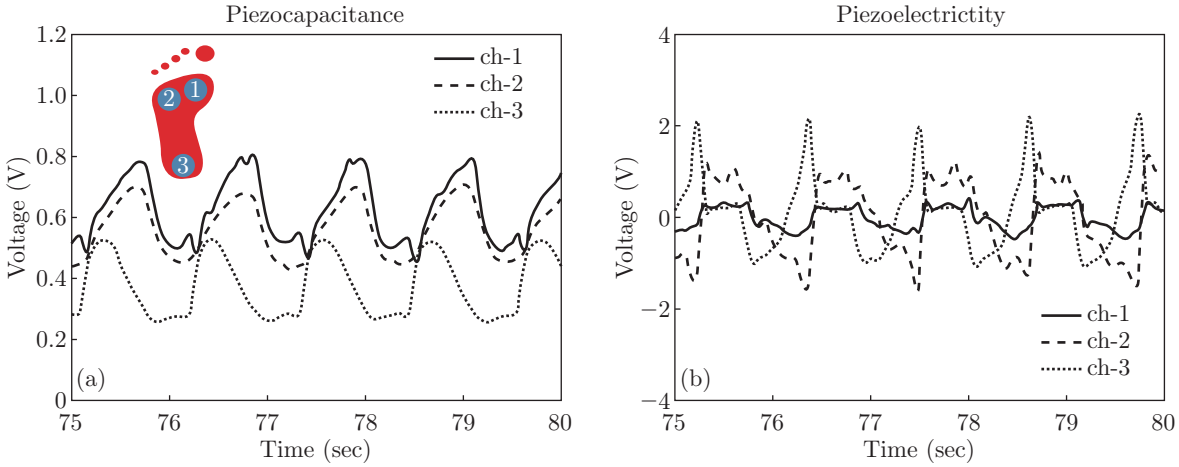

Fig. 12: Piezo-response signals from pressure-sensing insole made of hybrid sensors shown in Fig. 11. (a) piezocapacitive signal and (b) piezoelectric signal from each channel of right shoe while walking at 5 km/h

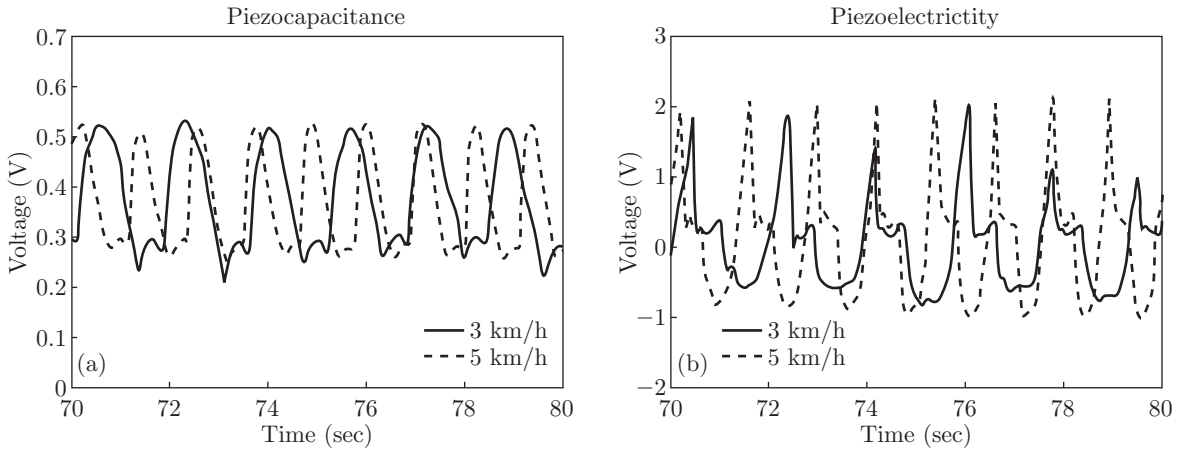

Fig. 13: (a) Piezocapacitive signals and (b) piezoelectric signals from channel 3 of hybrid sensor as a function of time while walking at 3 and 5 km/h

4 Conclusion

PVDF based conductive nanofiber web was used to fabricate a dry-type electrode by electroless silver-plating method for monitoring ECG signals. Silver-plated PVDF nanofiber web showed identical but stronger ECG signals than the adhesive type of Ag/AgCl gel electrode. PSB made by embedding the silicon rubber/carbon black/conductive carbon layer coated PVDF film in elastic textile bands were used to successfully monitor respiratory behavior, PWV, movement of muscles and energy expenditure. Electrospun PVDF and TPU nanofiber web-based pressure sensors were used to simultaneously measure the dynamic pressure with every frequency range and static pressure. Moreover, the pattern of walking, body weight, and energy expenditure were also monitored by applying PVDF and TPU nanofiber web-based pressure sensors to smart

insole. Compared to existing PU foam sheet for pressure sensor, the PVDF and TPU nanofiber webs developed in our study have advantages of high sensitivity, nanoscale thickness, and lower hysteresis curve in pressure-capacitance, and they can be easily converged with any fabrics or textiles. Our future studies will focus on the fabrication of sensors for monitoring and caring personal health more easily using hand-held and portable electronic devices like smart phone.

Acknowledgement

This work was supported by the National Research Foundation (NRF) grant (NRF-2008-0057632) funded by the Korea government (MSIP), Industrial Source Technology Development Programs (Grant No. 10033449) funded by the Ministry of Trade, Industry and Energy of Korea and Brain Pool program (132S-4-3-0612) of the Ministry of Science, ICT and Planning (MSIP).

References

[1] Frank KK, Yang H. Functional Nanofibre: Enabling Material for the Next Generations Smart Textiles, J Fiber Bioeng Inform, 2008: 1; 81-92.

[2] Oliver R, Tillotson J, Toomey A. Bioengineered Textiles and Nonwovens-The Convergence of Bio-miniaturisation and Electroactive Conductive Polymers for Assistive Healthcare, Portable Power and Design-led Wearable Technology, J Fiber Bioeng Inform, 2009: 2; 1-13.

[3] Imran AB, Seki T, Takeoka Y. Recent Advances in Hydrogels in terms of Fast Stimuli Responsiveness and Superior Mechanical Performance, Polymer J, 2010: 42; 839-851.

[4] Toshihiro H, Takamitsu U, Takasaki M. Electrical Actuation of Textile Polymer Materials, J Fiber Bioeng Inform, 2008: 1; 1-6.

[5] Bonaldi RR, Siores E, Shah T. Electromagnetic Shielding Characterisation of Several Conductive Fabrics for Medical Applications, J Fiber Bioeng Inform, 2010: 2; 237-245.

[6] Gu JF, Gorgutsa S, Skorobogatiy M. Soft Capacitor Fibers using Conductive Polymers for Electronic Textiles, Appl Phys Lett, 2010: 97; 133305.

[7] Tashiro K, Tadokoro H. Estimating the Limiting Values of the Macroscopic Piezoelectric Constants of Poly (vinylidene fluoride) Form I, Macromolecules, 1983: 16; 961-965.

[8] Goldman RJ. Capacitive Biofeedback Sensor with Resilient Polyurethane Dielectric for Rehabilation, U.S. Patent 5775332, 1998.

[9] Ahn YJ, Yoon S, Kim KJ. Preparation of Conductive Nanoweb through Electrospinning followed by Electroless Silver-Plating and its Application as Dry-Type Electrode for ECG Measurement, Text Sci Eng, 2012: 49; 47-55.

[10] Sinton AM, Suntheralingam R. Respiratory Inductance Plethysmography with a Electrical Impedance Plethysmograph, Med Biol Eng Comput, 1988; 26: 213-217.

[11] Kim JI, Park HJ, Kim TS, Yun MJ, Lee JD. Development of Portable Device for Transmitting Respiratory & ECG Gating in Liest-mode PET Data Acquisition, World Congress on Medical Physics and Biomedical Engineering 2006, IFMBE Proceedings, 2007; 14: 874-877.

[12] http: //www.vernier.com/filesmanuals/rmb.pdf

[13] Chang YM, Lee JS, Kim KJ. Heartbeat Monitoring Technique based on Corona-poled PVDF Film Sensor for Smart Apparel Application, Solid State Phenom, 2007; 124-126: 299-302.

[14] Kim KJ, Yoon S, Chang YM, Lee JS. Application of Uniaxially Stretched PVDF Piezoelectric Film for Medical Diagnosis, Proceedings of the 9th Asian Textile Conference, 2007; 9: 98.

[15] Kim KJ, Chang YM, Yoon S, Kim HJ. A Novel Piezoelectric PVDF Film-based Physiological Sensing Belt for a Complementary Respiration and Heartbeat Monitoring System, Integr Ferroelectr, 2009; 107: 53-68.

[16] Kim KJ, Kim HJ, Chang YM, Yoon S. Sensor Comprising a Material which Generates an Electrical Signal in Response to Elongation, Korean Patent 10-1023446, 2011.

[17] Kim KJ, Yoon S, Ahn YJ. The Method of Manufacturing Piezoelectric Sensor having Carbon Black, Korean Patent 10-1322838, 2013.

[18] Ahn YJ, Yoon S, Kim KJ. Respiration Monitoring using an Electromagnetic Interference Shielding PVDF Film-Imbedded Elastic Belt. Text Sci Eng, 2012; 49: 392-401.

[19] Tharion W, Yokota M, Buller M, DeLany J, Hoyt R. Total Energy Expenditure Estimated Using a Foot-contact Pedometer, Med Sci Monit, 2004; 10: CR504-509.

[20] Vathsangam H, Emken BA, Schroeder ET, SpruijtMetz D, Sukhatme GS. Energy Estimation of Treadmill Walking using on-body Accelerometers and Gyroscopes, 32nd Annual International Conference of the IEEE EMGBS, Buenos Aires, Argentina, 2010; : 6497-6501.

[21] Khalaj-Hedayati K, Bosy-Westphal A, Miller MJ, Dittmar A. Validation of the BIOPAC Indirect Calorimeter for Determining Resting Energy Expenditure in Healthy Free living Older People, Nutrit Res, 2009; 29: 531-541.

[22] Ahn YJ, Kim KJ. Physical Activity Monitoring Using PVDF Film-Embedded Elastic Belt, Tex Sci Eng, 2012: 49; 418-428.

[23] Mandal D, Yoon S, Kim KJ. Origin of Piezoelectricity in an Electrospun Poly(vinylidene fluoride-trifluoroethylene) Nanofiber Web-Based Nanogenerator and Nano-Pressure Sensor, Macromol Rapid Commun, 2011: 32; 831-837.

[24] Kim KJ, Yoon S, Mandal D. Electrostatic Capacitance-Type Nano Generator Using Piezoelectric Nanofiber Web, Korean Patent 10-1248415, 2013.

[25] Kim KJ, Yoon S. Electrostatic Capacitance-Type Pressure Sensor Using Nanofiber Web, Korean Patent 10-1248410, 2013.