heritage

MDPI

Article

Traditional Timber Granaries as Rural Architectural Heritage in Anatolia: Architectural and Cultural Characteristics of the Sındırgı Granaries

Alev Erarslan [1,*] and Caner Göçer [2,*]

[1] Department of Architecture and Design, Istanbul Aydın University, Istanbul 34295, Türkiye
[2] Department of Architecture, Faculty of Architecture, Istanbul Technical University, Istanbul 34367, Türkiye
* Correspondence: aleverarslan@aydin.edu.tr (A.E.); gocercan@itu.edu.tr (C.G.)

Abstract

Traditional timber granaries constitute an important component of Anatolia's rural architectural heritage, reflecting agricultural production, grain-storage practices, local building traditions, and rural life. This study examines the architectural and cultural characteristics of traditional timber granaries in the villages of the Simav River Basin in Sındırgı, Balıkesir. Fieldwork conducted in August 2025 combined architectural documentation, measured surveys, photography, typological, spatial, structural, material, and façade analyses, and informal field conversations with local residents. Three granary types were identified: the two-storied *evli ambar*, the half-sized *yarım ambar*, and the smaller *kabak ambar*. Field observations, local information, and previous research suggest that their differentiation may be associated with topography, household requirements, agricultural production, and storage needs. The granaries are predominantly constructed of resinous pine using a nail-free stacked-timber system joined through the locally termed *kurtboğazı* interlocking technique, of which two variations were documented. Raised stone supports, wide eaves, ventilated double-roof construction, and internal storage compartments demonstrate architectural solutions adapted to grain preservation and environmental conditions. The *çardak*, a semi-open porch in front of the granary, combines agricultural and social functions, while ornamental iron door hinges sharing motifs with locally produced Yağcıbedir carpets reflect connections between granary architecture and regional craft traditions. The Sındırgı granaries thus represent a distinctive form of local rural heritage in which traditional building knowledge, agricultural practices, craftsmanship, social life, and locally transmitted knowledge are closely connected.

Keywords: architectural heritage; rural architecture; Sındırgı; granary; timber architecture; agricultural production

Check for updates

Academic Editors: Vagelis Plevris and Marco Corradi

Received: 15 August 2026
Revised: 7 October 2026
Accepted: 16 October 2026
Published: 21 October 2026

Copyright: © 2026 by the authors. Licensee MDPI, Basel, Switzerland. This article is an open access article distributed under the terms and conditions of the Creative Commons Attribution (CC BY) license.

1. Introduction

Grain-storage structures have existed in Anatolia since the Neolithic period, reflecting the long history of agricultural production and food-storage practices. At Neolithic settlements such as Çatalhöyük, Hacılar, Höyücek, and Bademağacı, grain was stored in spaces associated with houses and courtyards [1–4]. This tradition continued during the Chalcolithic and Bronze Ages, when storage spaces and communal granaries became part of settlements and larger building complexes [5–9]. Large-scale grain storage was also an important component of Hittite and Urartian settlements [10,11]. During the Roman period,

monumental granaries such as those at Patara and Andriake demonstrate the continuation of organized grain-storage practices in Anatolia [12].

Traditional structures used for drying, preserving, and storing grain still exist as annexes to houses in many parts of Anatolia today. Examples can be found in the Eastern Black Sea Region, Kaş (Antalya), Posof (Ardahan), Göksun (Kahramanmaraş), Kütahya, Uşak, Bursa, Çorum, and other parts of Anatolia, where timber granaries reflect rural production practices [13–19].

Previous studies of traditional timber granaries in Anatolia demonstrate that these structures constitute a geographically widespread component of rural architecture, while displaying regional variations in material, construction technique, spatial organization, and relationship with agricultural production [13–18]. Studies of the Eastern Black Sea serenders, for example, emphasize timber construction, raised storage spaces, ventilation, and protection of agricultural products from moisture and pests, while research on timber granaries in Kütahya and Uşak similarly demonstrates the close relationship between storage architecture, local building materials, and rural production practices [13–18]. Taken together, these studies place the Sındırgı granaries within a wider Anatolian tradition of timber architecture associated with agricultural storage.

One of these areas is Balıkesir. Balıkesir has an economy predominantly based on agriculture and ranks third in Türkiye in terms of agricultural value due to its favorable land and climatic conditions [19]. Balıkesir has extensive plains, fertile pastures and grasslands, and abundant water resources. Timber granaries are found throughout its districts, reflecting the importance of agricultural production in the region.

The timber granaries constitute an important part of Balıkesir's architectural culture and have been addressed in previous studies from different perspectives [20]. A recent study by Ekşi and Yergün (2026) [21] examined the Sındırgı granaries primarily within the framework of sustainable conservation and ecological design, documenting their district-wide distribution and evaluating their sustainability performance. The present study differs in its scope and analytical focus by concentrating specifically on the villages of the Simav River Basin and examining the granaries through detailed architectural and cultural documentation, including their spatial organization, construction systems, timber-joint techniques, interior organization, façade characteristics, decorative elements, and relationships with local agricultural and craft traditions [21]. These structures have appeared in books and brochures introducing the region, published by local municipalities and the Turkish Ministry of Public Works and Settlement, but have received only brief attention in these sources. This study examines the timber granaries in the villages of the Simav River Basin, located in the eastern part of the district. It aims to document these structures as part of Anatolia's agricultural production history and timber architectural tradition and to introduce them more fully into the scholarly literature.

Although traditional timber granaries have been documented in different regions of Anatolia, including the Eastern Black Sea Region, Kütahya, Uşak, Ardahan, Kahramanmaraş, and the Teke Peninsula, studies focusing specifically on the timber granaries of Sındırgı remain limited. Existing publications concerning the region have either introduced these structures briefly or approached them primarily within the context of local cultural memory. Previous studies have not examined the granaries of the Simav River Basin through a combined analysis of their typological, spatial, structural, material, and façade characteristics based on field documentation and information provided by local residents. This study examines the Sındırgı granaries through field documentation, focusing on the relationship between their architectural characteristics, traditional timber-building knowledge, agricultural production, and local cultural practices. Particular attention is given to the identification of three local granary types, their spatial organization, the variations in

the kurtboğazı timber-joint technique, and the relationship between architectural elements and regional craft traditions. In this way, the study documents the distinctive characteristics of the Sındırgı examples and places them within the wider context of traditional timber grain-storage architecture in Anatolia.

The Sındırgı granaries also reflect traditional architectural and construction knowledge related to the storage and preservation of agricultural products. They also show how rural communities adapted building materials, construction techniques, spatial organization, and environmental strategies to meet the requirements of food storage.

The aim of this paper, then, is to explore the architectural and cultural characteristics of the timber granaries to be found in the villages of the Simav River Basin located in Sındırgı, one of the most productive agricultural districts of Anatolia.

This study aims to reveal the architectural, spatial, structural, and cultural characteristics of the granary buildings. To address this objective, the study is guided by the following research questions:

RQ1. What are the architectural, spatial, and typological characteristics of the traditional timber granaries in the villages of the Simav River Basin in Sındırgı?

RQ2. What are the construction systems, structural features, timber-joint techniques, and structural details of the granaries?

RQ3. What are the material, façade, and architectural-element characteristics of the granaries?

RQ4. How are the architectural characteristics and use of the granaries related to the traditional agricultural production and grain-storage culture of the region?

RQ5. What is the significance of these timber granaries within the rural architectural heritage and cultural identity of Sındırgı?

2. Materials and Methods

2.1. Study Area

Sındırgı, a district of the province of Balıkesir, is situated in the southeast of the province and lies 63 km away from Balıkesir along the Balıkesir-Izmir highway (Figure 1: Right). Surrounded by looming mountains, the settlement was established on the wide plain formed by the Simav and Cüneyt Rivers [21]. The Alaçam Mountains lie to the east of the district, the Davullu and Kazan Mountains to the west, and the Kepez and Simav Mountains to the south.

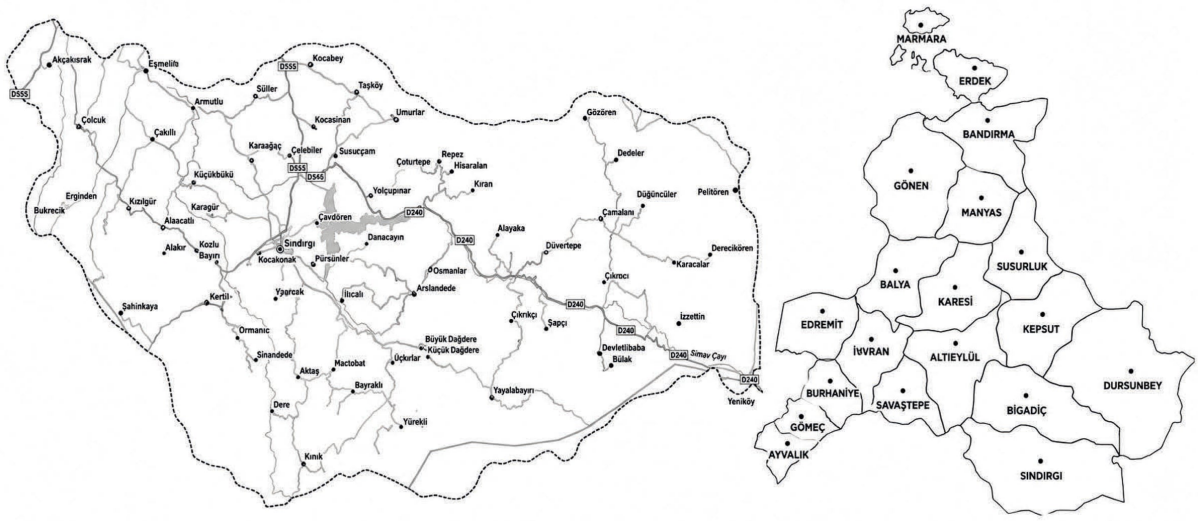

Figure 1. Right: Balıkesir Province and Sındırgı District. **Left**: Villages included in the study. Source: prepared by the authors.

The central district stretches east–west along the Sındırgı Plain. At an altitude of 250 m., the district's most prominent watercourses are the Simav, Ilıcalı and Cüneyt Rivers. The region lies in a transitional zone between the Mediterranean and Black Sea climates. A dry-temperate continental climate prevails to the east of the center of the province. The geomorphological, ground and climate characteristics of the district of Sındırgı have brought about an abundance of natural vegetation. While there are maquis and olive groves along the coastline, forests thrive inland, in the mountains, and in the higher parts of the ranges close to the shore [22].

The oldest settlement in the region, Havran İnönü Village, is home to the "Dark Cave" (Karanlık Mağara), in which remnants belonging to the Paleolithic Age have been found [23]. The region of Balıkesir was called Mysia in antiquity. Settlements that include the Phrygian, Lydian, Persian, Hellenistic civilizations, the Kingdom of Pergamon and the Roman Empire have ruled the city since 2000 BC [24]. In 85 BC, Mysia was completely overtaken by the Romans [25].

The first traces of Turkish settlement in and around Balıkesir can be dated back to the Turkish incursions occurring in the aftermath of the Battle of Malazgirt (Manzikert). The city was overtaken by the Seljuks under the leadership of Kutalmışoğlu Süleyman Shah [26]. Turkmen incursions intensified as from the second half of the thirteenth century and the Karasi Principality (*Beylik*) founded by Karasi Bey began to rule over a wide region that encompassed Sındırgı. Karasi Principality was the first beylik to be annexed to Ottoman land, and around the middle of the fourteenth century, was incorporated into the Ottoman Empire as a sanjak [27].

2.2. Methodology

Sındırgı, or Carsea, as it was named in Antiquity, is situated in the southeast of Balıkesir, on the borderline between the Aegean and Marmara Regions. Its economy based primarily on agriculture, the district is rich in barley, wheat, sunflower seed, haricot bean, broadbean, pea, lentil, corn, chick pea and feed crop production. Grain storage is as important as agricultural production. The traditional timber granaries of the region provide evidence of the local farming culture and grain-storage practices; however, the construction dates of individual examples cannot be verified through written records.

This study examines the architectural and cultural characteristics of the timber granaries associated with the agricultural production and storage practices of the Sındırgı District. Fieldwork was conducted in the area in August 2025 to document these granary structures. The field survey covered the villages of the Simav River Basin, where the granaries were more concentrated (Gözören, Çılbırcı, Hisaralan, Düvertepe, Derecikören, Devletlibaba, Karacalar, Kıran, Pelitören, Dereboyu, Dedeler, Düğüncüler, Çamalanı, Yayalabayırı, Mumcu, and Kürendere) (Figure 1: Left). The villages included in the field survey were selected because they are located within the Simav River Basin, where traditional timber granaries are particularly concentrated, and because they collectively provide examples of the different granary types identified in the region. The aim of this selection was to document the architectural variation in the surviving granaries in settlements with different topographical conditions, rather than to provide a statistically representative sample of all villages in Sındırgı.

Fieldwork was conducted in 16 villages in the Simav River Basin. The granaries encountered in these villages were examined on site; however, it was not feasible or necessary to prepare measured drawings of every surviving granary. For detailed architectural documentation, approximately four to five well-preserved examples were selected in each village, with priority given to examples representing the three local granary types identified in the region: *evli ambar*, *yarım ambar,* and *kabak ambar*. Examples were selected according

to their state of preservation, accessibility for documentation, and representativeness of the local typology. The selected examples were measured and photographed, and their plan and spatial organization, construction systems and structural details, façade characteristics, and decorative elements were documented and analyzed. As the fieldwork was designed as an architectural documentation and typological survey rather than a building-by-building inventory, individual field identification numbers were not assigned to the documented granaries. Accordingly, the study does not report a complete field-derived count of the granaries observed or a numerical breakdown of the measured examples by typological category.

The typological classification was based primarily on architectural and spatial characteristics observed during the field survey, including number of storeys, overall building size, plan organization, arrangement and number of internal storage compartments (göz/gübse), presence or absence of a lower storage level, and roof configuration. These characteristics were evaluated together with local terminology and information concerning storage capacity, household requirements, and topographical setting. On this basis, the documented granaries were evaluated within the three locally recognized types: the two-storied *evli ambar*, the half-sized *yarım ambar*, and the smaller *kabak ambar*. The classification is thus based on both observable architectural characteristics and the typological terminology used locally, rather than on a single dimensional criterion.

The total numbers and typological distribution presented in Table 1 derive instead from the previously published inventory by Ergül Gündağ Arıkan [20], as clarified below (Table 1). The numerical data concerning the total number and typological distribution of granaries in the villages, presented in Table 1, were not generated through the present field survey but were obtained from the previous study by Ergül Gündağ Arıkan [20]. In the present study, these data provide background information on the distribution of surviving granaries in the region.

During the fieldwork, informal conversations were held with approximately five to six local residents in each of the 16 villages. The conversations took place during the on-site documentation and did not follow a structured or formal interview format. Participants were local residents who were present during the field visits and were familiar with the granaries and their traditional uses. Most participants were between 45 and 65 years of age, while two were approximately 80 years old. Women constituted the majority of the participants, as they were more frequently present in the villages during the fieldwork, while male participants were fewer in number. No local building craftsmen or blacksmiths were encountered during the field survey.

Detailed residence histories and occupational backgrounds of the participants were not systematically recorded, as the conversations were informal and participants were not recruited as a predefined interview sample. The information they provided was used in relation to their knowledge of the granaries and local practices, rather than as systematically collected oral-history data.

The conversations were not audio- or video-recorded. Information considered relevant to the architectural and cultural documentation was recorded in written field notes during or immediately following the conversations. Since the conversations were informal rather than structured interviews, no standardized questionnaire was used. The recurring topics concerned the traditional uses and estimated ages of the granaries, stored products and storage practices, local terminology for granary types and architectural elements, construction practices and craftsmen, relocation and secondary uses of the structures, and the meanings associated with decorative elements. The field notes were evaluated together with the architectural documentation, field observations, and relevant literature. They provided

additional information on aspects that could not be determined through architectural observation alone.

Table 1. Number of granaries in the villages and their types. Statistics were obtained from Ergül Gündağ Arıkan [20].

Villages	Number of Granaries Today [21]	Types of Granary		
		Two-Storied Granary	Half-Sized Granary	Small-Sized Granary
Kürendere	154	50	77	27
Pelitören	56	6	50	-
Derecikören	134	133	1	-
Karacalar	83	80	1	2
Düğüncüler	161	141	15	5
Mumcu	124	120	4	-
Devletlibaba	38	26	6	6
Bulak	15	4	11	-
Dedeler	75	61	14	-
Çamalanı	116	37	77	2
Çılbırcı	35	11	18	6
Gözören	56	-	37	19
Düvertepe	20	16	4	-
Çayır	31	1	30	-
Alayaka	73	8	59	6
Şapçı	21	1	-	20
Çıkrıkçı	7	2	-	5
Hisaralan	33	7	24	2
Kıran	15	11	-	4
Kepez	28	15	-	13
Çoturtepe	11	-	1	10
Yolcupınar	20	20	-	-
Taşköy	37	2	-	35
Yunuslar	63	1	-	62
Yusufçam	10	-	-	10

Before the informal conversations, local residents were informed that the fieldwork was being conducted as part of a research project supported by Istanbul Aydın University and were informed of the research context. Participation in the conversations was voluntary. No personal identifiers are reported in the manuscript, and information obtained from the conversations is presented only in aggregated or non-identifiable form. As these exchanges took the form of informal field conversations rather than formally recruited and recorded interviews, no written consent forms were collected.

The informal conversations provided complementary information concerning the estimated age and traditional uses of the granaries, the types of products stored and methods of storage, secondary uses of the buildings, construction practices, and local terminology for architectural elements. Local residents also provided information about

the craftsmen who traditionally constructed the granaries and practices involving the relocation or rental of granaries. Local knowledge was also considered in understanding the names and definitions of the three granary types and in interpreting the motifs on the iron door hinges, which residents stated had been produced by local blacksmiths. Information from these conversations was considered together with field observations, architectural documentation, and the relevant literature, particularly when examining local terminology, traditional uses, and locally transmitted knowledge.

The study documents the Sındırgı granaries within the context of Anatolian agricultural storage structures, timber architecture, traditional timber construction techniques, and vernacular architecture (Table 2).

Table 2. Methods used in the study. Elements examined and aim/contribution.

Method	Elements Examined	Aim/Contribution
Field Survey	On-site examination of the granaries and collection of field data	On-site documentation of the architectural characteristics of the granaries
Architectural Documentation	Architectural surveying, preparation of measured drawings and plans, and photographic documentation	Documentation of the granaries as examples of wooden architectural heritage
Architectural and Spatial Analysis	Examination of plan organization, spatial characteristics, and patterns of use	Identification of the architectural and spatial characteristics of the granaries
Construction System and Structural Detail Analysis	Examination of the timber construction system, load-bearing system, joints, structural details, and roof structure	Identification of traditional timber construction techniques
Typological Analysis	Classification of the granaries according to their plans, spatial organization, construction systems, materials, and architectural characteristics	Establishment of typologies by identifying the common and distinctive characteristics of the structures
Material and Façade Analysis	Examination of building materials and façade characteristics	Definition of the local architectural character of the granaries
Informal Field Conversations	Informal conversations with local residents concerning the traditional use and estimated age of the granaries, local terminology for architectural elements and granary types, construction practices, and locally transmitted knowledge	Documentation of local architectural knowledge and locally transmitted information not represented in written sources
Overall Outcome	Integrated evaluation of data obtained from fieldwork, architectural analysis, and informal field conversations	Contribution to the literature on Anatolian agricultural storage structures, timber architecture, traditional timber construction techniques, and vernacular architecture, while supporting the documentation and transmission of these structures to future generations

3. Results

3.1. Traditional Uses

The timber granaries in the region were constructed for the storage and preservation of agricultural products, which play an important role in rural life [28]. Each household has its own granary, and the harvested crops are stored in these structures. The granaries were used to store wheat, barley, rye, lentils, corn, animal feed, seeds, legumes, tobacco, sesame

seeds, flour and other similar products; they were also employed to store dry fruits such as apples, grapes, figs and almonds [29]. Playing an important role in daily life, the buildings also serve as warehouses. In addition to storing food, the upper floors of the two-storied granaries are used for storing surplus articles and belongings such as mattresses and quilts, as well as household goods kept as young girls' trousseaus. The lower floors are used to store baskets, garden tools, firewood for the winter, pickle jars, large molasses cauldrons, and other equipment [30].

3.2. Locations of the Granaries

The wooden granaries stood as notable witnesses to the history of agricultural production in the region of Balıkesir, whose economy depends mainly on agriculture. They are more concentrated in the southeastern part of the region, in Sındırgı and its villages.

The locations of granary structures, which are annexes to houses used for storing legumes and grains obtained from the fertile plains of the region, vary according to the geographical locations of the villages. Three different types of granary locations are observed in the region;

(1) In some villages, the granaries are in the center of the village or collectively placed in an area that is called the "granary quarter". The granaries in the granary quarter are situated in a row, side by side. In this position, the front of the buildings face the houses and the main village road while in back, the granaries look toward the hillsides or to a road outside the village (Figure 2a,b). The granaries that stand together are sometimes situated under one roof or adjacent to the other granaries in the neighborhood (Figure 2c).

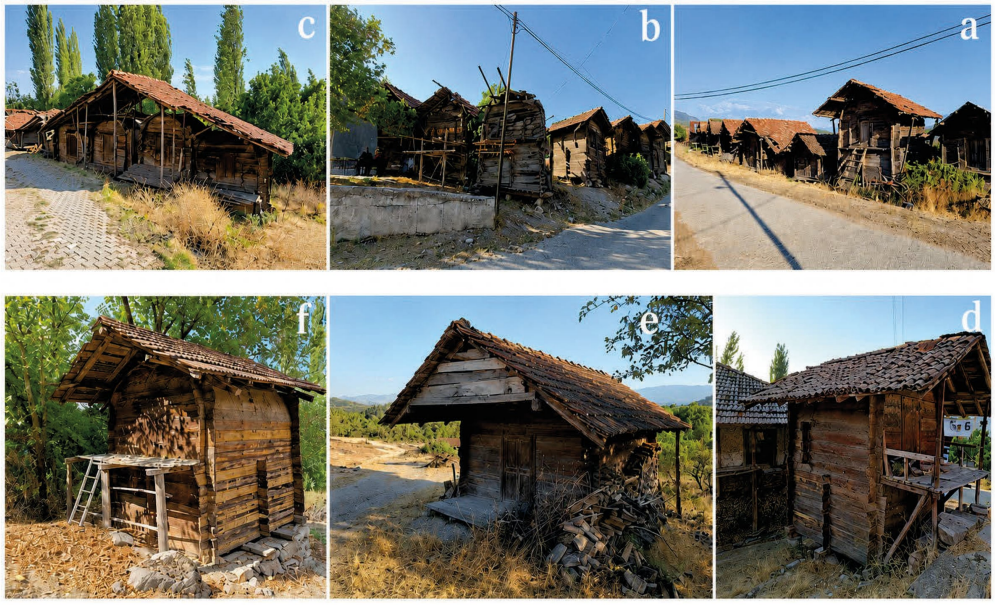

Figure 2. (**a**,**b**) Granary quarters in the villages of Karacalar, Kıran, Dereboyu, Dedeler, Çamalanı, Yayalabayırı, Mumcu, and Kürendere. (**c**) Two types of granaries standing side by side under a single roof. (**d**) A granary adjoining or situated close to a house. (**e**,**f**) Granaries standing independently and scattered within and outside the villages of Çılbırcı, Hisaralan, Düvertepe, and Derecikören. Source: authors.

(2) Some of the granaries are free-standing and situated close to the house. There are also granaries that adjoin the houses. Some are located inside the courtyards. The main reason the granaries were erected in a separate location was to protect the goods in the event of a fire or natural disaster (Figure 2d).

(3) In some villages, the granaries stand inside the village alleys and also in the outer areas of the town, in scattered form and each an independent building (Figure 2e,f).

3.3. Granary Types

There are 3 types of granaries in the region; two-story granary (locally *tam ambar* or *evli ambar*), the half-sized (locally *yarım ambar*) and the small-sized granary (locally *kabak ambar*). Previous research suggests that these typological differences may be associated with the geographical conditions of the villages as well as with socioeconomic factors such as the amount of agricultural product to be stored and household size [20]. All of the granaries were built by local builders and were erected according to the same architectural principles, each one designed to be dismantled and reassembled whenever needed [20].

(1) Two-storied granary: The two-storied granary, locally known as tam ambar or evli ambar, takes its name from its resemblance to traditional houses in the region (Figure 3a–c). These granaries are found in the region's villages at higher altitudes. They are two-storied and accessed by a portable ladder. Some granaries are accessed by stone steps. In some of the two-storied granaries (locally *evli ambar*) there is a room of stone masonry. Depending upon the topography, entrance into the two-storied granaries situated on slanted terrain is level with the access road. This type of granary follows standard dimensions, measuring 4 m in height and 3 m in length [20].

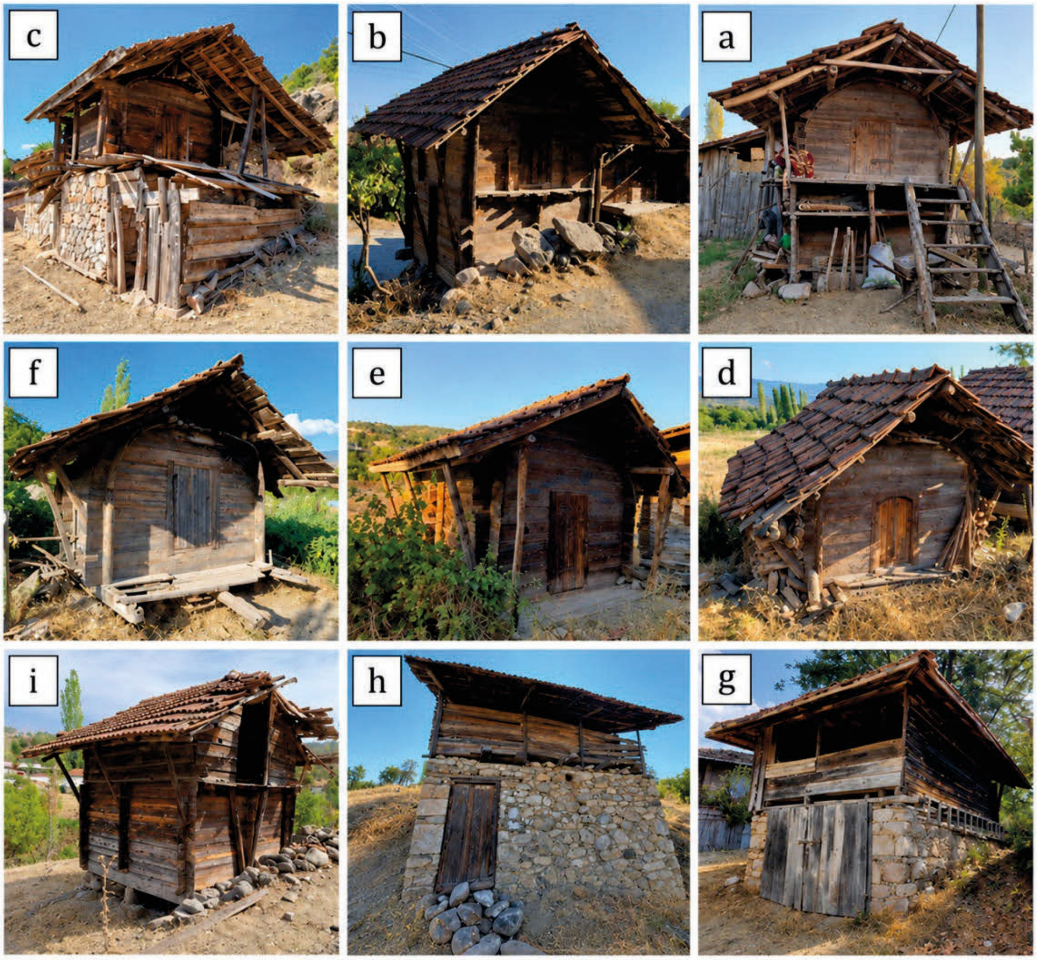

Figure 3. (**a**–**c**) Examples of two-storied granaries (locally *evli ambar*); c: a two-storied granary with a stone-masonry room below. (**d**–**f**) Examples of half-sized granaries (locally *yarım ambar*). (**g**,**h**) Examples of small-sized granaries (locally *kabak ambar*). (**i**) an enclosed small-sized granary. Source: authors.

There is a granary porch (locally *çardak*) in front of the two-storied granary, measuring about 1.5 m. wide and 2.5 m. long. Raised approximately 1.5 m above the ground, this

section facilitates the loading of goods onto horses and donkeys. This area is covered by the granary's wide-eaved roof. The granary porch has wooden railings. Some porches were eventually closed off. The granary owner sits here with neighbors, and on summer nights, some members of the family sleep in this area.

(2) Half-sized granary: The granaries locally referred to as *yarım ambar* are single-storey structures. Commonly found in villages situated on flat terrain, this type corresponds to the upper storey of the two-storey granary, without the ground floor used for grain storage (Figure 3d–f). This type of granary, which is used for storing smaller quantities of grain, is common among smaller families. These granaries are particularly concentrated in the village of Pelitören, located in the eastern part of the district. They are also called "Simav ambar" because of their resemblance to the one-storey granaries with hipped roofs seen in the area of Simav, Kütahya [20].

The half-sized granaries usually stand 3 m high and are 2 m long, which are the standard measurements for this type of granary. Because the half-sized granary lacks the ground-floor storage level of the two-storied granary, it has a lower overall storage capacity. There is a porch (*çardak*) in front of the half-sized granaries. The porch, or *çardak*, is usually 80 cm wide and has wooden railings. Some of these porches, however, were later enclosed.

(3) Small-sized granary: This type of granary was generally built in villages on the plain that lay close to the district center [30]. This type is rarely found in mountain villages. The small-sized granary is the smallest of the three types of structure and lacks the upper floor of the two-storied granary, with only the ground floor available for use. In its original form, the *kabak ambar* does not have an external roof covering (Figure 3g–i). Because the *kabak ambar* is of smaller dimensions, it has been built closer to the houses.

These granaries are less common than the other two types in the region. However, some surviving examples have subsequently been provided with a hipped roof to protect the timber structure from weathering; therefore, the roofed examples shown in Figure 3 represent later modifications rather than the original configuration of the *kabak ambar*. Sometimes the small-sized *kabak ambar* will have a compartment of stone on the ground level. And sometimes the upper part of the granary will have been closed off with timber to protect the structure (Figure 3i). The granary is 1.5 m. deep and 2 m. long [20].

3.4. Interiors

In the interiors on both the upper and lower floors, there are compartments, or chambers (*göz*, *gübse*), where grain is stored. These sections (*göz*), which have a depth of 2 m, have wooden lids.

The number of compartments varies according to granary type. In the two-storey granaries known as *evli ambar*, the compartments (*göz/gübse*) surround the interior of the granary in a U-shaped arrangement (Figures 4a,b, 5a and 6). The granary corridor is accessed through the entrance door. On both sides of this corridor, there are two or three symmetrically arranged compartments (*göz/gübse*) facing each other. Directly opposite the entrance, there are two or three compartments (*göz/gübse*) arranged side by side. On the upper floor, the tops of the compartments (*göz/gübse*) are open. Access to the ground floor of the granary is provided through hatches located in the floor of the upper storey. On the lower floor, there are four compartments. Approximately 100 kg of produce is stored in each compartment (*göz/gübse*).



Figure 4. (**a**,**b**) Interior views of a two-storied granary (*evli ambar*), showing the storage compartments (*göz/gübse*). (**c**,**d**) Interior views of a half-sized granary (*yarım ambar*), showing the L-shaped arrangement of the storage compartments (*göz/gübse*). (**e**) Hatches providing access to the lower-floor storage compartments (*göz/gübse*). (**f**) Interior of a small-sized granary (*kabak ambar*). Source: authors.

In the half-sized granary, the compartments (*göz/gübse*) surround the interior of the building in an L-shaped arrangement on both sides (Figures 4c,d, 5b and 6). The one-story half-sized granary does not have lids on the floor. In small-sized granaries, however, the number of compartments (*göz/gübse*) is 3 or 4.

An additional interior spatial element in the granaries is a shelf, 30 cm wide, that runs across the compartments (Figure 4c,d). The shelving extends along two or three sides of

the interior and is used for storing fresh fruit and vegetables for eventual drying. Food products intended for drying are hung from the timber elements of the upper structure.

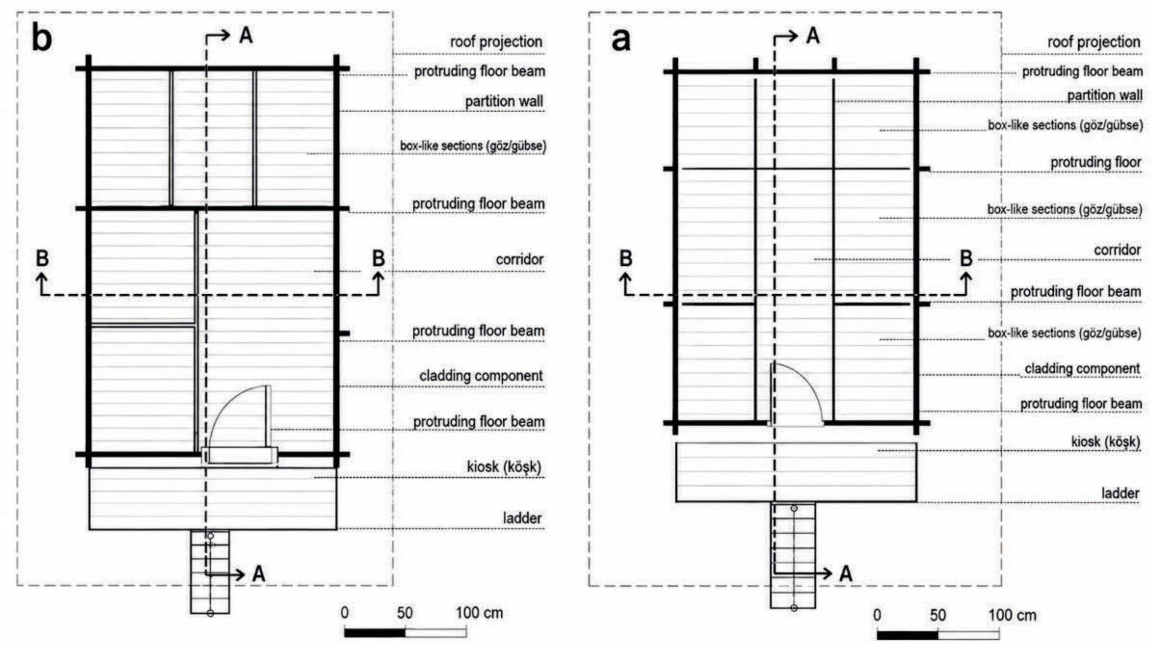

Figure 5. (**a**) Plan of a two-storied granary (*evli ambar*). (**b**) Plan of a half-sized granary (*yarım ambar*). Source: authors.

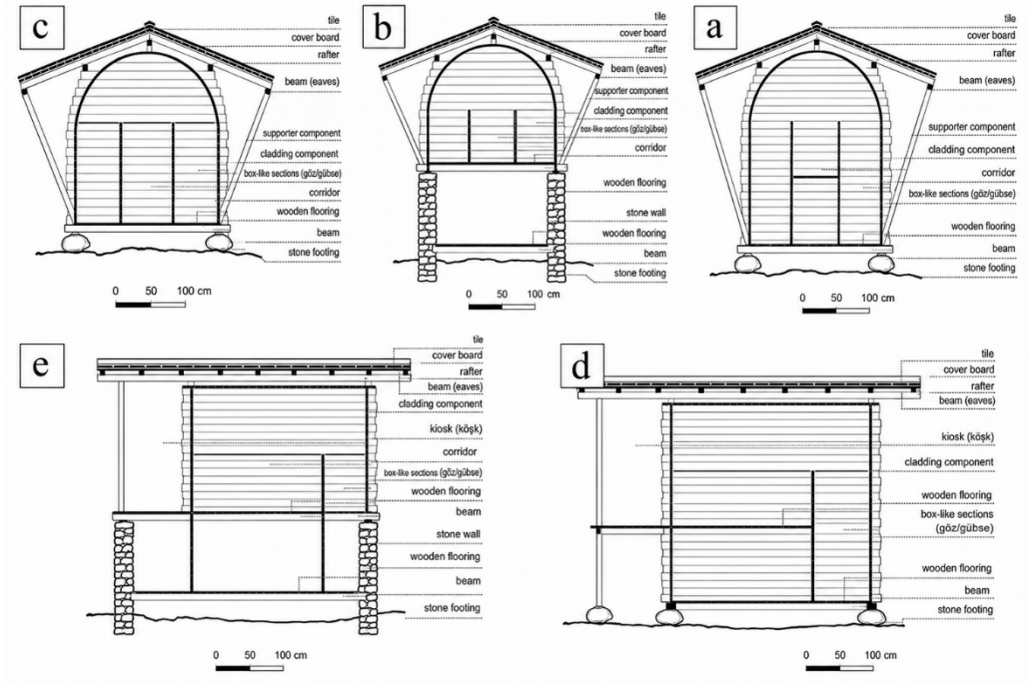

Figure 6. (**a**) Section B–B of a two-storied granary. (**b**) Section B–B of a two-storied granary with a stone-built lower floor. (**c**) Section B–B of a single-storied granary. (**d**) Section A–A of a two-storied granary. (**e**) Section A–A of a two-storied granary with a stone-built lower floor. Source: authors.

In all granary types, the timber elements forming the compartments (*göz/gübse*) are fitted into the timber of the outer wall, as shown in the plans and sections (Figures 5 and 6). At these junctions, the ends of the timber elements project approximately 10–15 cm beyond the exterior face of the wall.

3.5. Building Systems and Materials

The granaries are typically raised approximately 30–60 cm above ground on supports constructed of stacked river stones and locally available basalt, which function as a plinth (Figure 7a–c). The reason for raising the granary on a plinth so that it was not in contact with the ground was to flatten the land and ensure that air circulated beneath the building. This way, the granaries would be protected against water seepage, humidity and pests [31]. There are, however, some rare examples of buildings constructed on a raised foundation in masonry using the dry-wall technique (Figure 7a–c).

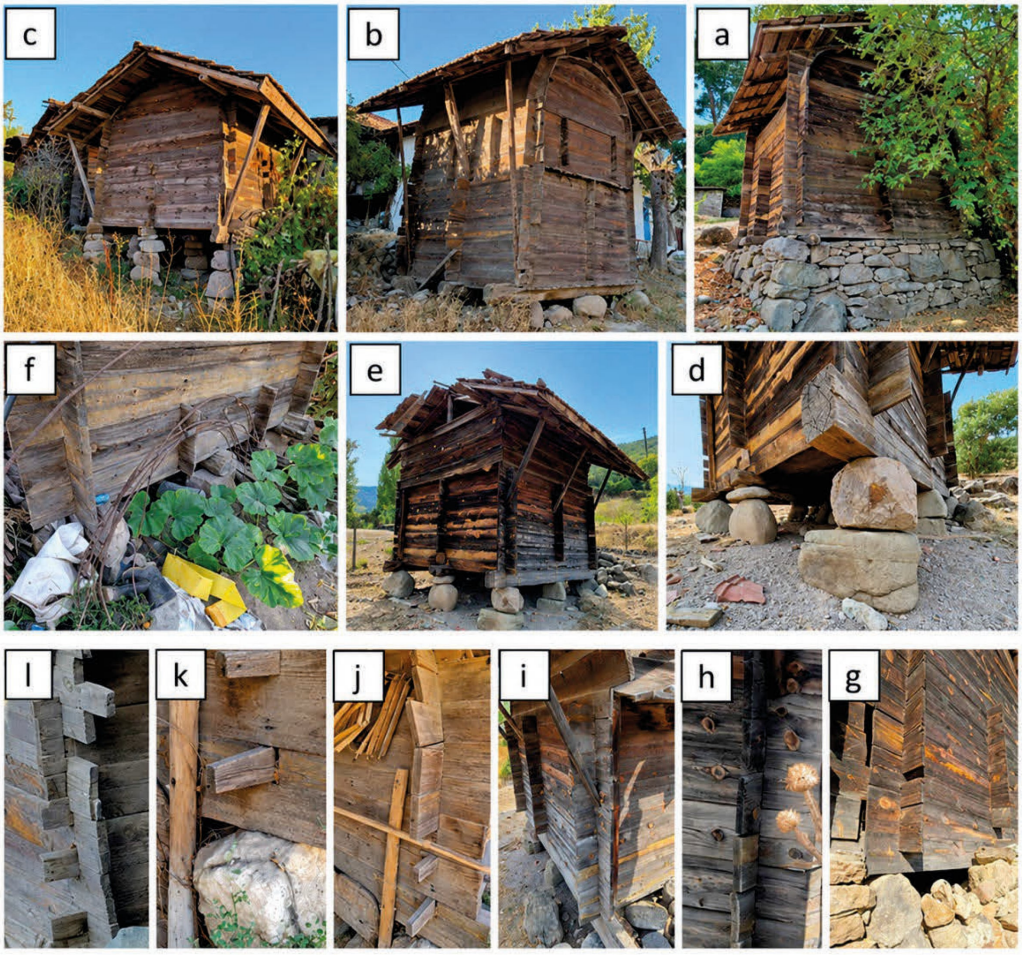

Figure 7. (**a**–**c**) Granaries with masonry walls rising from a stone plinth and granaries supported on river stones. (**d**–**f**) Base beams placed on the stones and joined to one another in all directions using the locally known *kurtboğazı* interlocking technique. (**g**–**i**) Type 1 of the *kurtboğazı* interlocking technique. (**j**–**l**) Type 2 of the *kurtboğazı* interlocking technique. Source: authors.

In this case, square or circular cross-sectional main floor beams were placed at 0.5 m intervals along the short edge of the structure on top of the granary's raised foundation stones. The main floor beams are 13–15 cm wide. Above these, a second set of beams is laid in the opposite direction (along the long edge), again at designated intervals (Figure 7d–f). The beams in both directions are tied together with a wooden joint; this interlocking technique is locally called *kurtboğazı* (wolf's throat) (Figure 7d–f). The interlocking *kurtboğazı* technique uses square-cut timber, where rectangular cavities are opened in two directions to allow for the top piece to fit into the lower one [31]. The ends of the main floor beams are joined together using the kurtboğazı interlocking technique and form a projection on all facades.

The granary structure, made completely of timber, is situated on this base. The granaries are generally built from resinous pine. The reason for this is that the characteristic aroma of this particular type of wood keeps vermin away. Resinous pine is also durable, contributing to the longevity of the granary and the preservation of the products stored inside [20].

The process of constructing a granary is known among the local community as "setting up a granary" [20]. The stacked timber system is used as the construction technique for building granaries. In this system, the walls are built by cutting resinous pine timber into thicknesses of 5 cm (locally *perde* or "planks") with a hand-saw. The timber planks are placed on top of each other horizontally without using any nails. The planks are joined at the corners using the *kurtboğazı* interlocking system. As in the main floor beams, the timber planks project outwards by 10–15 cm. To achieve this, the grooves on the planks start from an indentation of 10 cm. The projections give the granary a characteristic appearance. The way the granaries are built in an interlocking system without using nails makes it possible to repair or replace individual pieces and also allows the structure to be easily dismantled and reassembled if needed [32].

Two types of *kurtboğazı* interlocking systems have been used in the timber granaries of Sındırgı. The first involves cutting grooves (locally called *boğaz*) into the timber on both sides from above and below (Figures 7g–i and 8). In the second type, a groove is cut into the wall timber only from above. The end of the plank on the adjacent wall is cut and narrowed into an L-shape so that it fits into the corresponding groove (Figures 7j–l and 9). Only the narrow ends of the L-shaped elements project at the corners. Rather than occurring independently, Type 2 is generally used together with Type 1 within the same wall (Figure 7i,j).

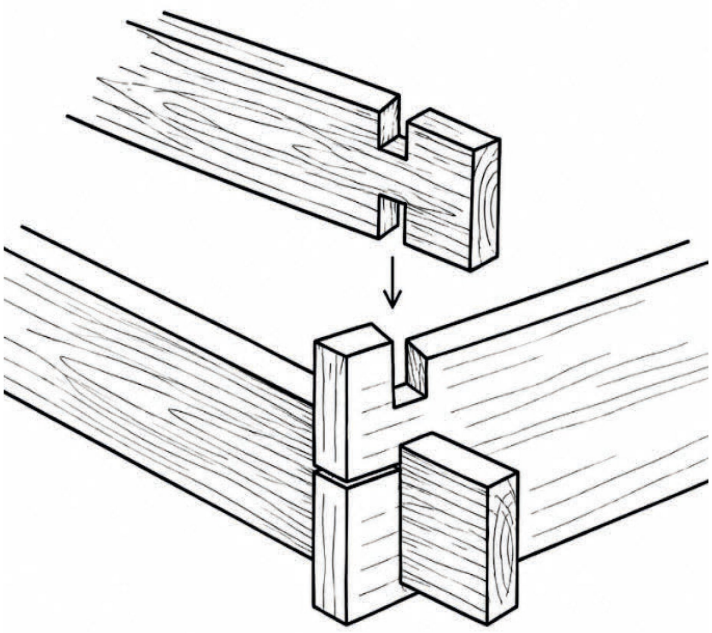

Figure 8. Detail of the Type 1 wall connection using the *kurtboğazı* interlocking technique. Source: authors.

During the field survey, Type 1 was observed more frequently than Type 2. However, the occurrence of the two joint types was not recorded quantitatively on a building-by-building or village-by-village basis; therefore, numerical frequencies or a detailed spatial distribution cannot be provided. Type 2 occurred less frequently, and in some examples the two joint forms were used together within the same structure.

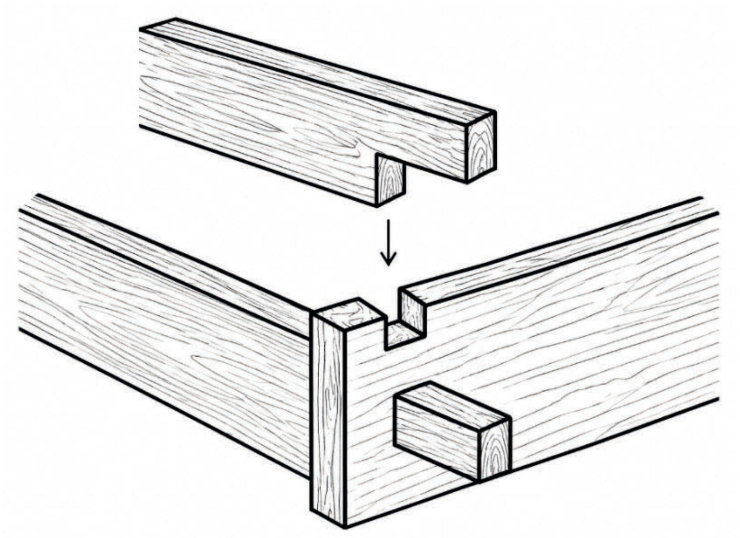

Figure 9. Detail of the Type 2 wall connection using the *kurtboğazı* interlocking technique. Source: authors.

3.6. Roof System

The two-storied granaries (*evli ambar*) and half-sized granaries (*yarım ambar*) have a vaulted timber upper covering beneath the external roof (Figure 10). This vaulted form is achieved by progressively shortening the lengths of the timber elements toward the apex.



Figure 10. Vaulted *evli* granary and *yarım* granary. Source: authors.

The barrel-vaulted granaries are covered by hipped roofs with wide eaves projecting on all sides (Figure 3a–f). The rafters typically project outwards about 1–1.5 m, forming wide eaves. These wide eaves are supported on two sides by wooden braces. In cases where granaries stand side by side, a single hipped roof spans over the buildings. While originally, Anatolian-type roof tiles were used on the roof, today Marseille-type tiles prevail.

There is an air gap between the external sloping tiled roof and the vaulted timber upper covering of the granary. This air gap helps prevent heat from the roof tiles from reaching the interior. Furthermore, ventilation of the gap between the double-roof layers helps dry any rainwater that may seep beneath the tiles and prevents moisture from reaching the interior [33].

The kurtboğazı interlocking system is also employed in the roof structure, including the connections of the supporting braces (Figure 11).



Figure 11. Structural arrangement of the timber roof elements (purlins and rafters), connections of the supporting braces, and the *kurtboğazı* interlocking system. Source: authors.

3.7. Facades

An examination of the façade organization of the granaries in the region reveals that the entrance doors are positioned at the center of the façade. The centrally located door is a single-leaf door measuring approximately 80 cm in width and 1.5 m in height. The granary doors are generally rectangular, although circular examples are occasionally encountered (Figure 3d). The other façades of the granaries are blind, without any openings. The doors are constructed by arranging timber planks vertically side by side.

The rectangular wooden doors have iron hinges both above and below. The hinges display various motifs. These motifs on the upper and lower parts of the granary's wooden doors are striking as they are the sole ornamentation of the building. All of the iron hinges were produced by local blacksmiths. The most elaborate hinges can be seen in the villages of Mumcu, Karacalar and Derecikören.

The hinges on the doors, exhibiting a variety of shapes and motifs, are usually about 50–60 cm long and of a thickness of 2 cm. The motifs are etched into the iron while it is still hot. The decorations can be divided into two groups: vegetal and geometrical designs. The vegetal ornamentation consists predominantly of floral designs and Tree of Life motifs, while the geometrical decoration includes diamond-shaped, rectangular, zigzag, curved, and straight-line patterns. Unadorned examples can also be seen. Both vegetal and geometrical designs follow principles of symmetry and compositional integrity. In some cases, the top and bottom hinges of a door may carry different motifs.

Some hinges display spiral or ram's horn motifs associated with spring and abundance. These motifs may appear only at the ends of the hinges or extend along their bodies [34]. Additionally, some of the iron hinges end in palmette motifs.

The motifs on the iron hinges can also be observed on the region's Yağcıbedir carpets [20]. The most widely used motif on the iron door hinges is the tree (Tree of Life) design, the symbol of abundance and plenitude [34]. Some of these Tree of Life motifs end in a straight line, while others terminate in floral patterns (Figures 12 and 13). The tree of life motif ending with a floral pattern is also widely used in Yağcıbedir carpets [20]. In some examples, geometrical elements are incorporated into the Tree of Life motif. In rare examples, a floral motif appears alone.



Figure 12. Original iron hinges of the granary doors. Source: authors.

Another motif encountered on the iron hinges consists of floral motifs placed between triangular forms (Figures 10 and 11). This motif is known as the "elli motif" in Yağcıbedir carpets [20]. Another motif that can be observed on the hinges is the "eye" motif (Figures 12 and 13). This motif, known as the muska or charm motif, is believed to protect against the evil eye and also occurs in Yağcıbedir carpet patterns [34–37]. The group of motifs known as the triangular or diamond-shaped design is the most widely used geometrical pattern on hinges. Still another motif seen on iron hinges, albeit not too frequently, is the *suyolu* or watercourse motif [20] (Figures 12 and 13). Some granary hinges have been left unadorned.

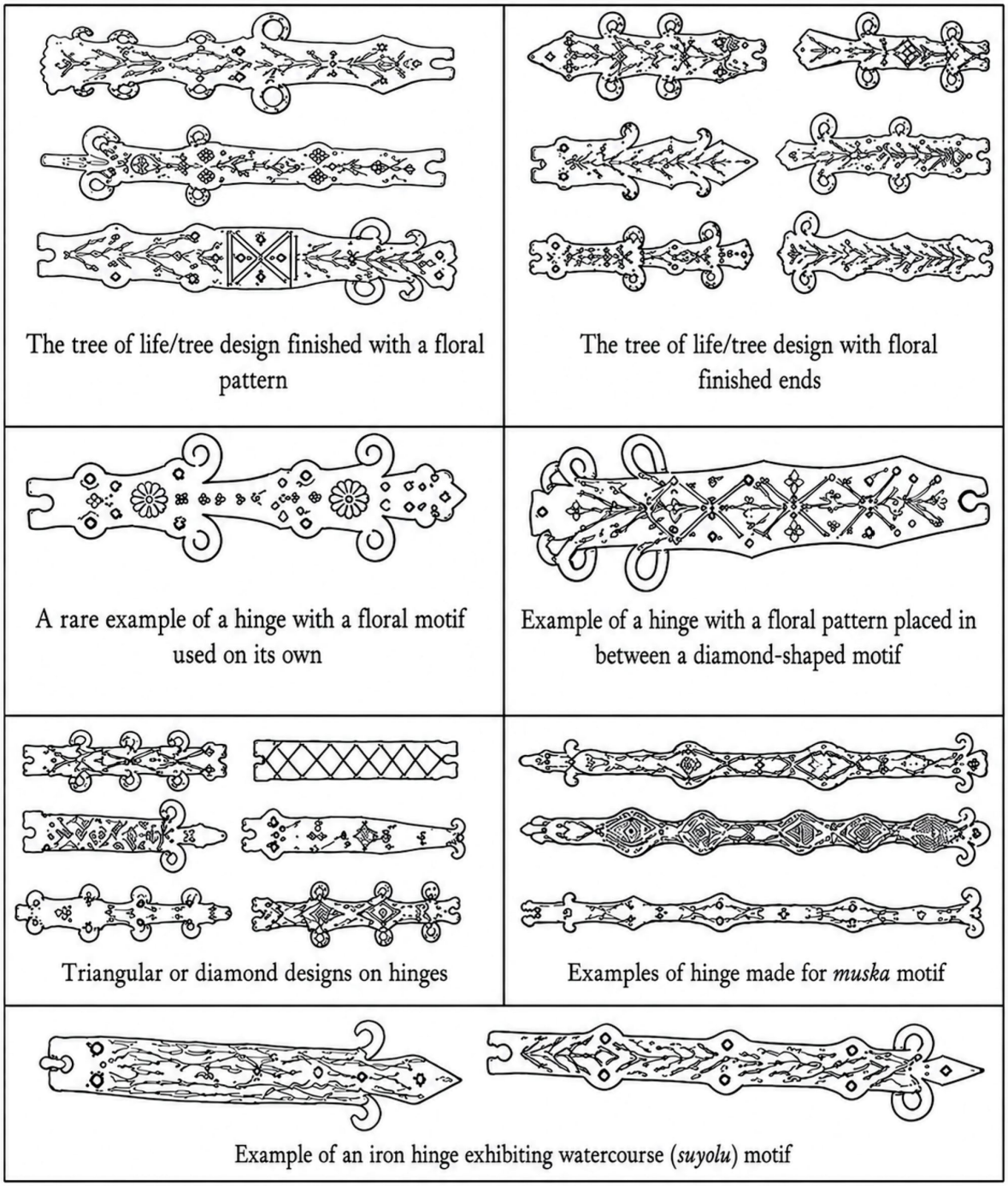

Figure 13. Motifs on the iron hinges of the granary doors. Source: authors.

4. Timber Granary Traditions in Other Regions of Anatolia

Timber grain-storage structures are used as expressions of rural production in many regions of Anatolia. Examples can be found in İskilip (Çorum), Ladik (Samsun), Çaybaşı (Ordu), Posof (Ardahan), Göksun (Kahramanmaraş), Simav and Çavdarhisar (Kütahya), Uşak, and many other areas [15–18]. Despite local variations, these structures generally display similarities in plan organization and construction systems. In all regions, durable, economical, locally available, and easily workable timber species were preferred for granary construction.

Among the best-known timber grain-storage structures in Anatolia are the seranders located beside houses in the Eastern Black Sea Region. The term serander means "cool, airy

place." These structures are used to store products such as hazelnuts, corn, and beans and are generally built on the courtyard or road side of the associated house, approximately 4–5 m away [13]. Durable timber species such as chestnut, juniper, and walnut are used in serander construction, with chestnut being the most widely used species in the region [14].

Seranders are generally raised above the ground on timber posts to protect stored products from moisture, dampness, rodents, and similar pests and to provide ventilation (Figure 14: Right). Some examples, however, have a masonry stone room below (Figure 14: Left). Seranders are accessed by portable timber ladders. In particular, no fixed ladder is attached to the structure, helping to prevent rodents from reaching the storage space [38].



Figure 14. Right: A serander raised on timber posts. Source: first author. **Left**: A serander raised above a masonry stone room. Source: first author.

Above this substructure is the granary in which agricultural products are stored. The structure consists of a square or rectangular enclosed storage space and an open balcony with timber railings at the front, known as the çardak. The çardak also functions as a small storage area. Corn cobs are hung there, and foodstuffs, fruit baskets, and pickle jars may also be stored in this space [13].

Upon entering the granary, a small passage known as the sofa is located between the çardak and the main storage space. This passage leads to the area containing the storage compartments. Activities such as threshing corn take place in this intermediate space, which may also contain small compartments for storing corn, flour, and beans [13]. The main storage space may contain one or two compartments into which shelled corn is placed for drying. Some seranders also include a mezzanine used for drying corn cobs and hazelnuts. Seranders whose storage area is divided into two compartments are known as "two-compartment seranders." The walls of the storage space are formed by massive timber planks joined without nails using the timber interlocking technique known as kurtboğazı (Figure 15). This lightweight system also allows seranders to be dismantled and transported to other locations [39].

Seranders are covered with gable or hipped roofs. Their roofs have wide eaves designed to protect the structure from rain, generally projecting approximately 30–40 cm beyond the body of the serander [38]. Because seranders could also symbolize the wealth of their owners, they were often carefully decorated [40]. Decorative areas include the timber members and çardak railings, where geometric motifs were executed using wood carving and openwork techniques (Figure 16).



Figure 15. Serander walls constructed using the kurtboğazı interlocking system. Source: first author.

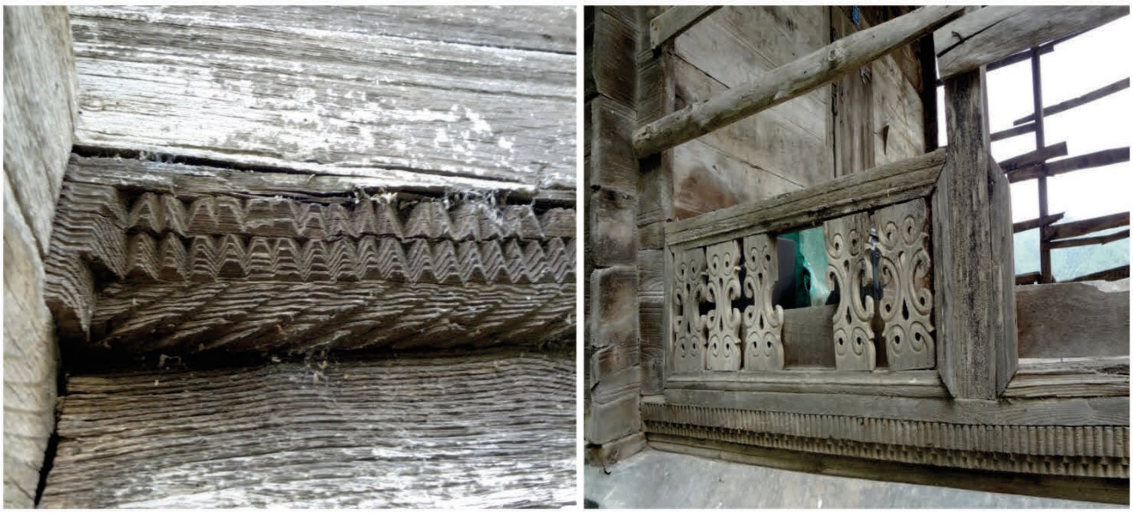

Figure 16. Examples of decoration on seranders. Right: detail of a çardak railing. Source: first author.

Another Anatolian region known for timber grain-storage structures is the Teke Peninsula in the Mediterranean Region, historically known as Lycia [41]. These granaries, which closely resemble the timber granaries of Sındırgı in appearance and plan organization, were constructed by *Yörük* communities in the region. They were used to store agricultural products from the fertile plains, particularly wheat and barley, as well as chickpeas, corn, oats, beans, and lentils, together with some valuable household belongings. Some granaries are located within house courtyards, while others are grouped together in areas adjacent to villages.

Although their dimensions vary, these granaries are constructed according to the same basic principles. They are raised approximately 40–50 cm above the ground on stacked river stones (Figure 17: Right). Less commonly, examples are raised on a masonry plinth constructed using the dry-stone technique [42] (Figure 17: Left).



Figure 17. Right: Granaries raised on river stones. Source: first author. **Left**: Granary raised on a stone plinth. Source: first author.

Longitudinal timber base beams are first placed on the river stones, with a second set of beams laid above them in the opposite direction (Figure 18: Right). The beams running in both directions are joined using the *kurtboğazı* interlocking technique. Their interlocked ends project outward at the four corners (Figure 18: Left).



Figure 18. Right: Timber base beams raised on river stones. Source: first author. **Left**: Projecting ends of the beams at the four corners. Source: first author.

The granary structure, constructed of cedar timber, is placed on this base. The storage space is entirely timber, and both wall and roof elements are assembled using the kurtboğazı interlocking system [41]. A major characteristic of structures built with this system is that they can be dismantled, moved to another location, and reassembled.

The granaries may be single- or two-storied. In the two-storied examples, the interior contains rectangular storage compartments arranged in a U-shaped configuration. These compartments are locally called göz or gübse. The entrance opens into a narrow corridor. Beneath the timber floor of the corridor are additional storage compartments, with or without lids, used for grain [39]. Some granaries have an open, timber-railed space at the

front known as the köşk. Reached by a timber ladder, the köşk facilitates the loading of products from the granary onto horses and donkeys. Covered by the projecting front eave of the roof, this space is also used for drying products; in summer, family members sit there and may even sleep there on warm nights [43].

The center of the façade of these granaries, which are covered by steep, wide-eaved, tile-clad gable roofs, is defined by the entrance door. Each door is different and can be regarded as the signature of the craftsman who built the granary. Some doors include a small opening at the bottom, locally called a *kedilik* ("cat hole"), allowing cats to enter and catch mice. Comparable openings are documented in the timber granaries of Çavdarhisar, Kütahya. Ekmekci [15] notes that these openings, termed "kedilik" (for cats), occur in more than half of the examined granaries and are generally cut into the lower parts of the doors as a practical measure intended to help keep rodents away by allowing cats access to the storage space.

5. Discussion

The traditional timber grain granaries located in the villages of the Simav River Basin in Sındırgı are distinctive examples of rural architecture shaped in accordance with the region's agricultural production practices, geographical conditions, household structure, and local building tradition.

The three granary types identified in Sındırgı should be understood not merely as formal variations, and their distribution across the villages is presented in Table 1. Field observations, local information, and previous research suggest that their architectural differences may also be associated with topographical conditions, household requirements, agricultural production, and storage needs. The relationship between form and agricultural function can also be seen in other Anatolian timber granary traditions discussed above. Although regional examples vary in scale, spatial organization, and local terminology, they share a common principle of adapting timber construction and storage spaces to local environmental and agricultural conditions. The Sındırgı granaries are distinguished within this broader tradition particularly by the coexistence of three locally defined types—evli ambar, yarım ambar, and kabak ambar—and by the relationship between these types, settlement conditions, and household storage capacity.

The interior organization of the Sındırgı granaries further indicates a relationship between spatial form and storage function. Rather than representing arbitrary plan variations, the different arrangements of the storage compartments reflect differences in storage capacity and household requirements. Similar arrangements occur in other Anatolian timber granaries, where internal compartments and intermediate spaces are used for storing, drying, and handling agricultural products. In the Sındırgı examples, the organization of the göz/gübse compartments constitutes an important architectural characteristic distinguishing the three locally defined granary types.

The structural solutions observed in the Sındırgı granaries also reflect a broader principle shared by other Anatolian timber granary traditions. As in the Eastern Black Sea serenders and the timber granaries of the Teke Peninsula discussed above, separating the timber structure from direct contact with the ground contributes to ventilation and protection against moisture and pests. The form of the supporting system varies regionally: serenders are commonly raised on timber posts, whereas the Sındırgı and Teke Peninsula examples are generally supported on stones or, in some cases, on masonry bases. Despite these regional differences in supporting systems and materials, raising the granaries above the ground serves the same basic purpose of protecting stored grain from moisture and pests.

The *kurtboğazı* interlocking technique further connects the Sındırgı granaries with the broader timber granary tradition of Anatolia. A comparable nail-free interlocking system is used in both the Eastern Black Sea serenders and the granaries of the Teke Peninsula, allowing the timber structures to be dismantled, transported, and reassembled when necessary. Within this shared construction tradition, however, the Sındırgı examples display a noteworthy local variation: the field survey documented two different applications of the kurtboğazı joint, which may also occur together within the same structure.

Comparable principles can also be observed beyond Anatolia. Karpuz [13] identifies close structural and functional parallels between the Eastern Black Sea serander and the Norwegian loft, noting that both employ stacked-timber construction and interlocking timber joints and can be dismantled and relocated. Norwegian lofts may also be raised above the ground, providing protection from ground moisture and rodents. Balkoca et al. [18] likewise situate granary architecture within a wider international context. In Japan, traditional kura and takakura storehouses include examples raised on timber posts; the takakura, particularly associated with the Ryukyu Islands and the Amami-Oshima region, has an elevated storage floor and a thatched roof and has traditionally been used for storing food, especially rice. In Southeast Asia, comparable elevated granary traditions include the timber leuit of western Java, the lumbung of Lombok with its enclosed thatched storage section, and granary structures built in the Tongkonan tradition on Sulawesi [18]. Similar functional responses occur in other traditional granary traditions. Kaya [44] discusses elevated food-storage structures in different parts of the world, including the hórreos of Spain and espigueiros of Portugal, where separation from the ground, ventilation, and protection from moisture and pests likewise constitute important design principles. The Sındırgı granaries share several features with these traditions, particularly the use of timber construction, elevation, and ventilation for the long-term storage of food.

Material selection provides another point of comparison among Anatolia's regional timber granary traditions. In each region, locally available and durable timber species were selected in accordance with environmental conditions and storage requirements. While resinous pine predominates in the Sındırgı granaries, chestnut is widely used in the Eastern Black Sea serenders, whereas cedar characterizes the Teke Peninsula examples. Although the timber species differ from one region to another, their selection reflects the use of locally available materials for similar construction and storage needs.

The roof system of the Sındırgı granaries is also closely related to the requirements of grain storage. While wide-eaved roofs are also characteristic of other Anatolian timber granaries, the Sındırgı examples are distinguished by the combination of a vaulted timber upper covering with an external hipped roof and a ventilated air gap between the two layers. This double-roof arrangement helps control heat and moisture and is a distinctive feature of the Sındırgı granaries.

The semi-open spaces in front of the granaries also show similarities between the two regions. The çardak of the Sındırgı granaries combines an agricultural function, facilitating the loading and handling of stored products, with everyday social uses such as sitting and sleeping during summer nights. A closely comparable space occurs in the Teke Peninsula granaries, where the semi-open element known as the *köşk* similarly serves both the handling of agricultural products and seasonal domestic activities. In both regions, these spaces were used not only for agricultural work but also as part of everyday rural social life. The ornamented iron door hinges are another characteristic feature of the Sındırgı granaries. Several of the vegetal and geometric motifs on these hinges also occur in local Yağcıbedir carpets, linking the decoration of the granaries with regional craft traditions. Motifs associated with fertility and abundance also connect the ornamentation of the granaries with their agricultural function.

The location of the granaries also reflects the relationship between agricultural storage and rural settlement patterns. In Sındırgı, granaries may form collective groups, occur in association with houses and courtyards, or stand independently within and around the villages. A comparable relationship between granaries and settlement organization is observed in the Teke Peninsula, where examples are likewise found either within house courtyards or collectively in areas adjacent to villages. In Sındırgı, areas locally known as "granary quarters" show that these storage structures also formed a recognizable part of the village fabric. Their location apart from houses in some settlements also reflects practical concerns regarding the protection of stored products from fire and other hazards.

6. Conclusions

The timber grain granaries constructed from pinewood by the Turkmens living in the vicinity of Balıkesir using the *kurtboğazı* interlocking technique constitute an important part of the rural landscape of the region. These structures bring together, within a single architectural structure, the region's history of agricultural production, traditional storage practices, use of local materials, timber construction craftsmanship, and rural life practices.

The findings directly address the research questions defined at the beginning of the study. The field survey identified three locally recognized granary types—*evli ambar*, *yarım ambar*, and *kabak ambar*—distinguished by differences in spatial organization and number of storeys. Field observations, local information, and previous research further suggest that these typological differences may be associated with storage requirements, topographical conditions, and household needs. The study also documented the stacked-timber construction system and identified two variations in the *kurtboğazı* interlocking technique. In addition, the analysis revealed distinctive material, façade, and decorative characteristics, particularly the ornamented iron door hinges and their relationship with regional craft traditions. The spatial organization of the storage compartments, the *çardak*, and other architectural elements further demonstrates the close relationship between the granaries and traditional agricultural production and storage practices. Taken together, these findings demonstrate the significance of the granaries as a distinctive component of Sındırgı's rural architectural and cultural heritage.

The granaries are registered under title deeds, and all of them have owners. However, no written records establishing the construction dates of the individual granaries were identified. According to information obtained during the informal field conversations, local residents commonly associate some of the granaries with a history of approximately 300–350 years and reported that the most recently constructed examples date to approximately 50 years ago. These dates should therefore be understood as estimates based on local oral accounts rather than as verified construction dates.

The granaries have become symbolic elements of the region. Indeed, beyond their function of storing agricultural products, they have become places for socialization and gathering in the villages and have also influenced the naming of the locations in which they are situated. The granary porch located in front of the two-storied granaries (*evli ambar*) situated in the village square or the central part of the village serves as a place for gathering and socialization (Figure 19).

The local construction system, local materials, and local architectural terminology, together with the regional motifs observed on the door hinges, demonstrate that tangible and intangible cultural heritage values are integrated within these structures**.** Informal field conversations with local residents concerning the traditional uses and estimated ages of the structures, the local names of their architectural elements, and local narratives associated with the granaries also support the multilayered cultural character of the granaries. These structures are distinctive local examples of Anatolia's traditional grain-storage culture

and form an important part of Sındırgı's rural architectural heritage. They bring together the region's rural landscape, history of production, traditional building knowledge, craft culture, and locally transmitted knowledge.



Figure 19. Women sitting beneath the shelter in front of the granary. Source: authors.

The grain granaries, which constitute one of the socio-economic and cultural environmental components shaping the identity of Sındırgı's villages, are regarded as one of the region's most valuable forms of heritage. The granaries have been placed under protection by the Regional Conservation Board for Cultural and Natural Assets. The granary structures constitute one of the important sightseeing routes for people visiting the region [36]. However, not all of the granary structures are in good condition today. Many of them suffer from water infiltration through their roofs. The local people are awaiting assistance for the repair of the roofs. In particular, the granaries in the village of Çamalanı have suffered serious deterioration.

Some of these structures, which function as grain granaries, are today used only as storage spaces for winter supplies due to the decline in agricultural activity in the region resulting from the migration of the young population capable of engaging in agriculture to cities. However, there are also granaries that continue to retain their original function.

If conserved and restored, these structures could also contribute to tourism in the region. Due to the abundance of thermal water resources, the region is a thermal tourism area. Within this context, these granaries could be utilized in conjunction with ecotourism. As an important cultural treasure and an element of the natural landscape of the region, these structures can be preserved and kept alive through tourism activities that do not damage the environment and through day-trip recreational activities.

Author Contributions: Conceptualization, A.E.; methodology, A.E.; formal analysis, A.E. and C.G.; investigation, A.E. and C.G.; data curation, C.G.; writing—original draft preparation, A.E. writing—review and editing, C.G.; visualization, C.G. and A.E. All authors have read and agreed to the published version of the manuscript.

Funding: This paper is a project supported by the Istanbul Aydın University Scientific Study Projects (SSP) Commission under Approval No. 2025/08 dated 19 June 2025.

Data Availability Statement: Data is contained within the article.

Conflicts of Interest: The authors declare no conflicts of interest.

References

1. Umurtak, G. Silos in Neolithic Settlements of Burdur-Antalya Region. *Adalya* **2007**, *X*, 1–10.
2. Hodder, I. Things and the Slow Neolithic: The Middle Eastern Transformation. *J. Archaeol. Method Theory* **2018**, *25*, 155–177. [CrossRef]
3. Bogaard, A.; Charles, M.; Twiss, K.C.; Fairbairn, A.; Yalman, N.; Filipovic, D.; Demirergi, G.A.; Ertuğ, F.; Russell, N.; Henecke, J. Private Pantries and Celebrated Surplus: Storing and Sharing Food at Neolithic Çatalhöyük, Central Anatolia. *Antiquity* **2009**, *83*, 649–668. [CrossRef]
4. Duru, R. Göller Bölgesi Neolitiği. Hacılar, Kuruçay Höyüğü, Höyücek, Bademağacı Höyüğü. In *Neolithic in Turkey*; Özdoğan, M., Başgelen, N., Eds.; Arkeoloji ve Sanat Yayınları: Istanbul, Türkiye, 2007; pp. 331–360.
5. Duru, R. The Neolithic Transition from Village to Town in the Lake District. In *Housing and Settlement in Anatolia: A Historical Perspective*; Sey, Y., Ed.; Tarih Vakfı Yayınları: Ankara, Türkiye, 1996; pp. 49–59.
6. Cutting, M.V. *The Neolithic and Early Chalcolithic Farmers of Central and South West Anatolia: Household, Community and the Changing Use of Space*; Archaeopress: Oxford, UK, 2005; BAR International Series 1453.
7. Hauptmann, H. Die Entwicklung der Frühbronzezeitlichen Siedlung auf dem Norşuntepe in Ostanatolien. *Archäol. Korrespondenzbl.* **1976**, *6*, 9–20.
8. Korfmann; Demircihüyük I., M. *Architektur, Stratigraphie und Befunde*; Verlag Philipp von Zabern: Mainz, Germany, 1983.
9. Eslick, C. Hacılar to Karataş: Social Organization in Southwestern Anatolia. *Mediterr. Archaeol.* **1988**, *1*, 10–40.
10. Seeher, J. Hitit Krallarının Ambarları: Devlet Hazinesi ve Güç Kaynağı olarak Tahıl Depolama. *Colloq. Anatol.* **2015**, *14*, 180–195.
11. Erdem, A.Ü. Ayanis Verileri Işığında Urartu'da Tahıl Depolama. *Arkeol. Derg.* **2011**, *XVI*, 83–91.
12. Bean, G.E. *Lycian Turkey: An Archaeological Guide*; Ernest Benn Limited: London, UK, 1978.
13. Karpuz, H. Serander ve Loft: Türk ve Norveç Halk Mimarisinde Eşdeğerli İki Yapı. *ODTÜ MFD* **1999**, *19*, 71–82.
14. Özgüner, O. *Köyde Mimari: Doğu Karadeniz*; Dergah Yayınları: Ankara, Türkiye, 1968.
15. Ekmekçi, M. Çavdarhisar'daki Tahıl Ambarları. *Pamukkale Univ. Sos. Bilim. Enst. Derg.* **2023**, *57*, 219–253.
16. Polat, S. Uşak İlinde Bir Ev Eklentisi Olarak Ambarlar. *Marmara Coğrafya Derg.* **2016**, *34*, 230–243.
17. Bülbül, R.; Gökbulut, N.; Gökdemir, A.; Oluk, M. Geleneksel Yöntemlerle İnşa Edilen Tahıl Ambarları: Kütahya Örneği. In *Proceedings of the International Scientific Research Congress Dedicated to the 30th Anniversary of Baku Eurasia University, Baku, Azerbaijan*; Baku Eurasia University: Baku, Azerbaijan, 2022; pp. 787–800.
18. Balkoca, Ö.; Demirci, Ö.S.; Güngor, C. Kırsal Üretimde Yardımcı Mekânlar: Tahıl Ambarları. *Online J. Art. Des.* **2023**, *11*, 264–279.
19. Özbey, Ö.; Bayraktar, B. Balıkesir'in Ekonomik Yapısı. *Balıkesir Univ. İktisadi İdari Bilim. Fak. Derg.* **2023**, *4*, 21–42.
20. Arıkan, E.G. Kültürel Belleğin Aktarımına Örnek: Sındırgı Köylerindeki Ahşap Ambarlar. Master's Thesis, Nevşehir Hacı Bektaş Veli University, Nevşehir, Türkiye, 2024.
21. Ekşi, Ş.; Yergün, U. Investigation of Balıkesir Sındırgı Granaries in the Context of Sustainable Conservation. *Sustainability* **2026**, *18*, 5243. [CrossRef]
22. Arslan, F. Bigadiç ve Sındırgı İlçelerinde Yerleşmeler. Ph.D. Thesis, Ankara University, Ankara, Türkiye, 2013.
23. Koç, S.N. Balıkesir-Sındırgı, Çoturtepe Köyü'nde Kırsal Yerleşim Dokusunun İncelenmesi ve Koruma Önerisi. Master's Thesis, Balıkesir University, Balıkesir, Türkiye, 2024.
24. Hüryılmaz, H. Antik Dönemde Balıkesir. In *Bitek Kent: Balıkesir*; Özdem, F., Ed.; Yapı Kredi Yayınları: İstanbul, Türkiye, 2003; pp. 17–27.
25. İlgürel, M. Balıkesir. *TDV İslam Ansiklopedisi* **1992**, *5*, 12–14.
26. Sezgin, Y.; Aybek, S. Sındırgı'nın Arkeolojik Değerleri. In *Güncel Araştırmalar Işığında Sındırgı*; Arslan, F., Aksak, P., Zoğal, V., Üzülmez, M., Demir, E., Eds.; Ege Üniversitesi Yayınları: İzmir, Türkiye, 2018; Volume 200, pp. 3–15.
27. Günay, V. Karasioğulları Vakıfları. In *Proceedings of the XIV. Türk Tarih Kongresi, Ankara, Türkiye, 9–12 September 2002*; Türk Tarih Kurumu Yayınları: Ankara, Türkiye, 2005; pp. 357–369.
28. Uğuz, S.Ç.; Özgürel, G.; Çözeli, F.E. Halk Ekonomisi. In *Balıkesir Somut Olmayan Kültürel Miras Alan Araştırmaları*; Duymaz, A., Ed.; T.C. Balıkesir Valiliği: Balıkesir, Türkiye, 2023; pp. 401–402.
29. Ünal, Ç. Sındırgı'da Kırsal Coğrafi Görünümlerin Geçmişten Bugüne Değişimi. In *Güncel Araştırmalar Işığında Sındırgı*; Arslan, F., Aksak, P., Zoğal, V., Üzülmez, M., Demir, E., Eds.; Ege Üniversitesi Yayınları: İzmir, Türkiye, 2018; Volume 200, pp. 359–373.
30. Duymaz, A. Balıkesir Halk Kültürü. In *Bitek Kent: Balıkesir*; Özdem, F., Ed.; Yapı Kredi Yayınları: İstanbul, Türkiye, 2003; pp. 214–247.
31. Göçer, C. Structural Evaluation of Traditional Masonry Buildings During the February 6–12, 2017 Ayvacık (Çanakkale) Earthquakes in Turkey. *ITU A|Z J. Fac. Archit.* **2020**, *17*, 1–12. [CrossRef]

32. Tuna, C. *Orta Karadeniz Bölgesi Sahil Kesiminde Geleneksel Mimari*; Arkeoloji ve Sanat Yayınları: Istanbul, Türkiye, 2008.
33. Göçer, C. A Field Investigation to Evaluate the Effects of Prevailing Wind and Solar Radiation on Water-Induced Damage to the Eaves of Wooden Fiber-Board Covered Roofs. *Eng. Fail. Anal.* **2024**, *159*, 108135. [CrossRef]
34. Çoruhlu, Y. *Türk Sanatında Hayvan Sembolizmi I*; Ötüken Publishing: İstanbul, Türkiye, 2019.
35. Öney, G. Anadolu Selçuklu Sanatında Hayat Ağacı Motifi. *Belleten* **1968**, *32*, 25–36.
36. Bozkurt, S. Geleneksel Türk Halı Sanatında Kullanılan Motiflerin Anlamları: Sındırgı-Yağcıbedir Halıları Üzerine Göstergebilimsel Bir Analiz. *Gümüşhane Univ. İletişim Fak. Elektron. Derg.* **2020**, *8*, 697–731.
37. İbiş, S. Sürdürülebilir Turizm Kapsamında Sındırgı ve Çevresinin Turizm Potansiyeli Üzerine Bir Araştırma. *Türk Tur. Araşt. Derg.* **2018**, *4*, 26–40. [CrossRef]
38. Erarslan, A. An Example of Traditional Timber Building Techniques from Anatolia: Granary Structures in Eastern Black Sea, Turkey: Serender. *Int. Wood Prod. J.* **2021**, *12*, 58–70. [CrossRef]
39. Eruzun, C. Doğu Karadeniz'de Seranderler. In *Proceedings of the First International Turkish Folklore Congress*; Türk Tarih Kurumu Yayınları: Ankara, Türkiye, 1977; Volume 5, pp. 125–141.
40. Batur, A. A Distinctive Living Environment and Rural Architecture in the Eastern Black Sea Region. In *Rural Architecture in the Eastern Black Sea Region*; Batur, A., Ed.; Milli Reasürans T.A.Ş.: İstanbul, Türkiye, 2005; pp. 10–161.
41. Erarslan, A. A Traditional Wooden Structure Technique from Anatolia: Wooden Granaries in the Ancient Region of Lycia (Teke Peninsula). *Bull. Transilv. Univ. Bras. Ser. II For. Wood Ind. Agric. Food Eng.* **2022**, *15*, 77–96. [CrossRef]
42. Aktaş, Ş. Likya ve Milyas Bölgesi Ahşap (Tahıl) Ambarları. In *Lukka'dan Likya'ya: From Lukka to Lycia*; İşkan, H., Dündar, E., Eds.; Yapı Kredi Yayınları: Istanbul, Türkiye, 2016; pp. 349–354.
43. Özakın, R. Şekerciler Ambarı. In *Elmalı and Its Vernacular Architecture*; Günay, R., Ed.; Ege Yayınları: Istanbul, Türkiye, 2008; pp. 273–284.
44. Kaya, M. Anadolu Kültüründen Dünya Kültürüne Ambarlar. *Ege Coğrafya Derg.* **2020**, *29*, 321–344.

Disclaimer/Publisher's Note: The statements, opinions and data contained in all publications are solely those of the individual author(s) and contributor(s) and not of MDPI and/or the editor(s). MDPI and/or the editor(s) disclaim responsibility for any injury to people or property resulting from any ideas, methods, instructions or products referred to in the content.