fire

MDPI

Review

Contemporary Fire Safety Engineering in Timber Structures: Challenges and Solutions

Xiaowei Zang [1,2], Wei Liu [3], Dali Wu [1,2], Xuhai Pan [1,2], Wei Zhang [4,5,6], Haitao Bian [1,2,*] and Ruiqi Shen [4,5,6,*]

1 College of Safety Science and Engineering, Nanjing Tech University, Nanjing 211816, China; nanozang@njtech.edu.cn (X.Z.); wudali@njtech.edu.cn (D.W.); xuhaipan@njtech.edu.cn (X.P.)
2 Jiangsu Key Laboratory of Hazardous Chemicals Safety and Control, Nanjing 211816, China
3 Science and Technology on Applied Physical Chemistry Laboratory, Shaanxi Applied Physics and Chemistry Research Institute, Xi'an 710061, China; peony1303@126.com
4 School of Chemistry and Chemical Engineering, Nanjing University of Science and Technology, Nanjing 210094, China; wzhang@njust.edu.cn
5 Micro-Nano Energetic Devices Key Laboratory of MIIT, Nanjing 210094, China
6 Institute of Space Propulsion, Nanjing University of Science and Technology, Nanjing 210094, China
* Correspondence: bianhaitao@njtech.edu.cn (H.B.); rqshen@njust.edu.cn (R.S.)

Abstract: As environmental conservation and sustainability gain prominence globally, modern timber structures are receiving increased focus. Nonetheless, the combustible nature of timber raises significant fire safety concerns. This review explores the recent advancements in fire safety engineering for timber structures, emphasizing both contemporary high-rise buildings and historical timber constructions. It covers topics like inherently safer design principles, fire risk prediction, and evacuation methodologies. The review emphasizes the criticality of selecting suitable materials, structural design, firefighting systems, and advanced sensor technologies for early fire detection. Additionally, we analyze and compares various evacuation strategies, offering insights into the challenges and future directions for fire safety in modern timber structures.

Keywords: timber structures; fire safety; inherently safer design; char layer; evacuation strategy

check for updates

Citation: Zang, X.; Liu, W.; Wu, D.; Pan, X.; Zhang, W.; Bian, H.; Shen, R. Contemporary Fire Safety Engineering in Timber Structures: Challenges and Solutions. *Fire* **2024**, *7*, 2. https://doi.org/10.3390/fire7010002

Academic Editor: Fang Liu

Received: 17 November 2023
Revised: 4 December 2023
Accepted: 14 December 2023
Published: 20 December 2023

Copyright: © 2023 by the authors. Licensee MDPI, Basel, Switzerland. This article is an open access article distributed under the terms and conditions of the Creative Commons Attribution (CC BY) license (https://creativecommons.org/licenses/by/4.0/).

1. Introduction

Frank Lloyd Wright once observed, "Wood is universally beautiful to man. It is the most humanly intimate of all materials". Historically, wood has been pivotal in shaping architectural methodologies globally. For instance, East Asian countries have a rich tradition in the crafting and erection of ancient timber structures [1]. These structures, exemplified by the Forbidden City in China, showcase the region's architectural history [2]. The Hōryū-ji temple in Japan, established in the early 7th century, stands as the world's most ancient surviving timber structure [1,3]. The contemporary era has witnessed a heightened awareness of environmental concerns, driving renewed interest in modern timber structures for their ecological benefits and sustainability [4–7]. The 21st century began with a rapid increase in high-rise buildings using sustainable timber [8]. Notably, 92% of new residential buildings in the United States now feature timber frameworks. Innovations, such as Cross-Laminated Timber (CLT), have enabled the construction of 'laminated buildings' up to 25 stories high [9]. However, while timber's aesthetic appeal and sustainability are celebrated, its increased use in construction raises significant fire safety challenges. Wood's inherent combustibility requires careful consideration in design and urban planning, particularly in densely populated or heritage areas where fire risks are considerable. Consequently, integrating modern fire safety technology with traditional timber construction is vital for these structures' preservation.

By nature, timber structures possess lower insulation properties compared to conventional materials like concrete and steel, making them more vulnerable to rapid fire and

heat transmission [10]. The 2019 Notre Dame Cathedral fire in Paris highlighted this risk vividly. The cathedral's extensive timber roof framework facilitated the rapid flame spread, resulting in significant loss of historical artifacts [11]. Additionally, timber structures, often situated close together with minimal firebreaks, face heightened risks of fire spread [12]. This challenge was evident in several fires in China, including the 2014 devastation of Yunnan's Shangri-La ancient town, the destruction in Guizhou's Jiujie Miao Village, and the 2023 Tongren ancient timber structures fire. These incidents emphasize the critical need for enhanced fire prevention and safety measures in timber construction practices [13,14].

Figure 1 illustrates the intense conflagration that ravaged Notre Dame de Paris Cathedral, a landmark of Gothic architecture [11]. It vividly showcases the severe damage inflicted on the cathedral's intricate framework and historical artistry, underscoring the urgency of restoration efforts. The physico-chemical properties and architectural features of timber structures highlight the importance of integrating fire safety measures in their design [5]. Effective fire safety strategies should include careful selection of building materials, thoughtful architectural design, and the implementation of advanced firefighting technologies. This approach ensures a comprehensive framework for fire prevention, detection, and rapid extinguishment [15,16]. In technological advancements, early fire risk evaluation and predictive analysis are becoming increasingly significant in developing modern fire safety protocols [17–21]. The incorporation of advanced sensor technologies, applying data analytics for predictive fire modeling, and the enhancement of emergency response strategies are new paths to reinforce fire safety in timber construction [22–25]. Ensuring safe evacuation routes becomes particularly pressing once a fire incident occurs. Exploring the complex dynamics of human behavior and movement in evacuations, including psychological aspects and technology facilitation, is essential.



Figure 1. The Devastating Fire at Notre Dame de Paris Cathedral [11].

Furthermore, the tendency for rapid fire spread in tall timber buildings necessitates reevaluating conventional firefighting approaches. As skyscraping timber structures represent a more sustainable future for urban development, their fire safety issues demand rigorous academic investigation and innovative, research-based solutions. A comprehensive review of literature specifically addressing the fire-related risks in timber structures is notably absent [8,13,26–28]. This review is committed to systematically exploring the latest advancements in fire safety for timber structures, with the aim of addressing current challenges and forecasting future research trends. In this study, we carefully selected critical studies from the Web of Science related to the fire safety of timber structures, ensuring a comprehensive and in-depth understanding of this field. Our primary focus included historical and contemporary timber structures, fire-resistant materials, fire behavior analysis, and fire risk assessment. Additionally, we evaluated the diversity of research methodologies and recent innovations to ensure this review is comprehensive and forward-thinking,

accurately reflecting the latest trends in fire safety for timber structures. The structure and logical coherent of this review are illustrated in Figure 2.

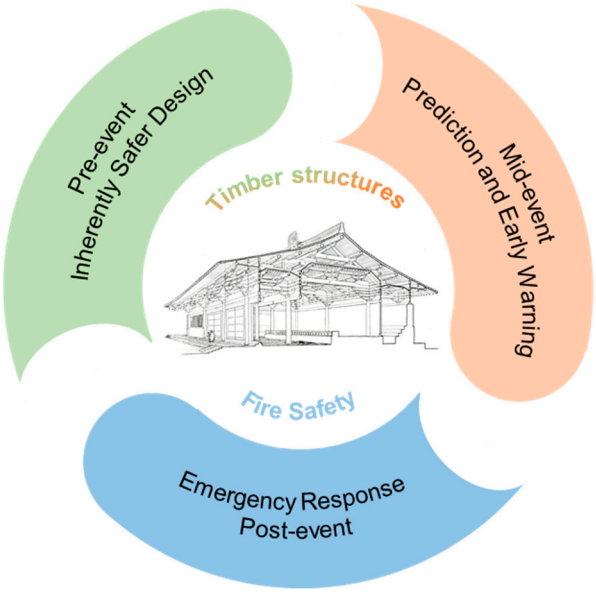

Figure 2. Outline of the article.

Figure 2 presents the East Great Hall's timber structure from the Foguang Temple in Wutai County, Shanxi Province, China [29]. Foguang Temple is the largest and best-preserved timber structure from China's Tang Dynasty [29]. This review's structure systematically follows a trajectory from proactive, inherently safer design strategies to real-time risk prediction and alerting during a fire event, culminating in post-incident risk reduction techniques. It accentuates critical fire safety strategies, including adopting inherently safer design principles, deploying predictive and early warning systems during emergencies, a comprehensive understanding of fire safety's significance for timber structures, and formulating effective emergency response plans for post-event scenarios.

2. Inherently Safer Design of Timber Structures

Inherent safety refers to the characteristic of production equipment or systems being safe by design, ensuring that, even in the event of human error or malfunctions, accidents are minimized [30]. The concept of 'Inherently Safer Design' primarily focuses on the safety strategies of industrial equipment and processes [30]. Applying this principle to timber structures is significant [31]. For instance, inherently safer design approaches promote the use of timber species that either have been specially treated or naturally possess fire-resistant properties, effectively reducing fire risks. Additionally, a well-considered design ensures that timber structures retain stability and structural integrity under various conditions, such as seismic activities or high-velocity winds.

2.1. Material Selection and Flame-Retardant Strategies

2.1.1. Timber Chemical and Physical Properties

Ancient timber structures predominantly employ timber that has undergone minimal processing, relying primarily on rudimentary air-drying techniques [32]. Consequently, maintaining consistent moisture content proves challenging, leading to inevitable issues such as splitting, warping, decay, and insect infestation. In contrast, modern timber structures utilize engineered timber products. To prevent severe raw material shortages in the future [4], instead of using solid timber, engineered timber materials such as laminated veneer lumber (LVL) [33], laminated strand lumber (LSL) [34], and CLT [35,36] are mainly used. Compressed timber plates and dowels are used to connect members in post-and-beam structures as a substitute for a steel fastener [37–40]. Moreover, there is an amplified

imperative to protect timber when conserving historical timber structures, where the combustion properties of aged wood differ significantly from those of fresh timber [41,42]. For example, ancient pine's ignition time and peak time were shorter, and the heat release rate, smoke production rate, specific extinction area and carbon monoxide (CO) production rate were higher than those of fresh pine [32]. This not only entails preserving intrinsic historical value but also necessitates the incorporation of fire-resistant and anti-decay features [43]. The physical and chemical properties of some wood used in timber structures are summarized in Table 1.

Table 1. Physical and chemical properties of wood used in timber structures.

Species	Hardness	Compression (MPa)	Tension (MPa)	Bending (MPa)	Density (kg/m^3)	Thermal Expansion Coefficient (K^{-1})	Thermal Conductivity (W/m·K)	Source
Pine	Softwood	34.8	58.8	49	545	$\approx 4 \times 10^{-6}$	≈0.24	[44]
Fir	Softwood	42.8	74.5	60.8	513			[44]
Ash	Hardwood	61.8	71.1	112.8	600			[45]
Birch	Hardwood	63.7	39.2	55.9	650	$\approx 3.4 \times 10^{-6}$	≈0.14	[46,47]
Oak	Hardwood	44.1	72.6	63.7	645			[44]

As shown in Table 1, each species exhibits distinct mechanical and thermal properties, suitable for various specific applications in timber structures. Timber's chemical and physical properties dictate its combustion characteristics as an organic material [26,48]. The timber species and their structural properties were summarized by Hugi et al. [49]. Hardwoods, such as oak and walnut, generally possess higher density and exhibit slower burning rates, and their char layer protects the inner timber [44]. Conversely, softwoods, such as spruce and pine, are easily ignited due to their porous, cellular structure, and they burn faster while releasing relatively more heat [39,50]. The fire behavior of timber structures is, among other factors, dependent on the fire behavior of timber, and many related studies have been reported [13]. Understanding these disparities aids in grasping the behavior of wood under fire conditions, thereby providing a scientific foundation for fire safety design. Scholars have carried out a series of experimental studies and mechanistic research on the combustion characteristics of timber, as shown in Table 2.

Table 2. Experimental Study and Mechanism Research on Combustion Characteristics of Timber.

Authors	Type of Article	Description	Source
Bartlett et al.	Review	Factors affecting the burning behavior of timber	[26]
Wang et al.	Review	The main control equations of the combustion numerical model	[8]
Cheng et al.	Review	Smoke hazards of tall timber structures	[13]
Wang et al.	Research article	The degree of aging, the combustion kinetic performance and the change law of the combustion characteristics of ancient pine	[32]
Hugi, Haurie et al.	Research article	Fire behavior of tropical hardwood and european timber	[48,49]
Wang et al.	Research article	Smoldering-to-flaming transition in timber	[51]
Li et al.	Research article	Characteristics of flame spread over the surface of charring solid combustibles at high altitude	[52]

As shown in Table 2, Bartlett et al. conducted a comprehensive review of timber fire dynamics [8,13,26]. The preliminary work's calculations for modeling heat and mass transfer in timber during fire were based on the model developed by Fredlund [53]. Simulations were made with the one-dimensional computer program WOOD1. The input data varied in the calculations, including timber thickness, density, moisture content, and thermal

exposure [53]. The model's validity has been verified by simulation of the experiments. The results showed that the temperature distribution in the specimens tested is described very well for both moist and dry material [53]. Regarding the pressure distribution in the timber, Fredlund's model cannot accurately determine the process due to local charcoal layer cracking [53]. The phenomenon highlights the complexity of modeling real-world fire scenarios and the need for continuous refinement of predictive models.

To date, the burning behavior of timber has been complex. The processes behind pyrolysis, ignition, and combustion are generally well understood [13], with good agreement in the fire science literature over a wide range of experimental conditions for crucial parameters such as critical heat flux for ignition (12 $kW/m^2 \pm 2$ kW/m^2) and heat of combustion (17.5 $MJ/kg \pm 2.5$ MJ/kg). These parameters are vital for evaluating the risks of using timber as a construction material [26]. However, extinction conditions are less well defined and understood, with critical mass loss rates for extinction varying from 2.5 g/m^2 s to 5 g/m^2 s [26]. The intricacies of the chemical and physical transformations of timber during combustion are depicted in Figure 3.

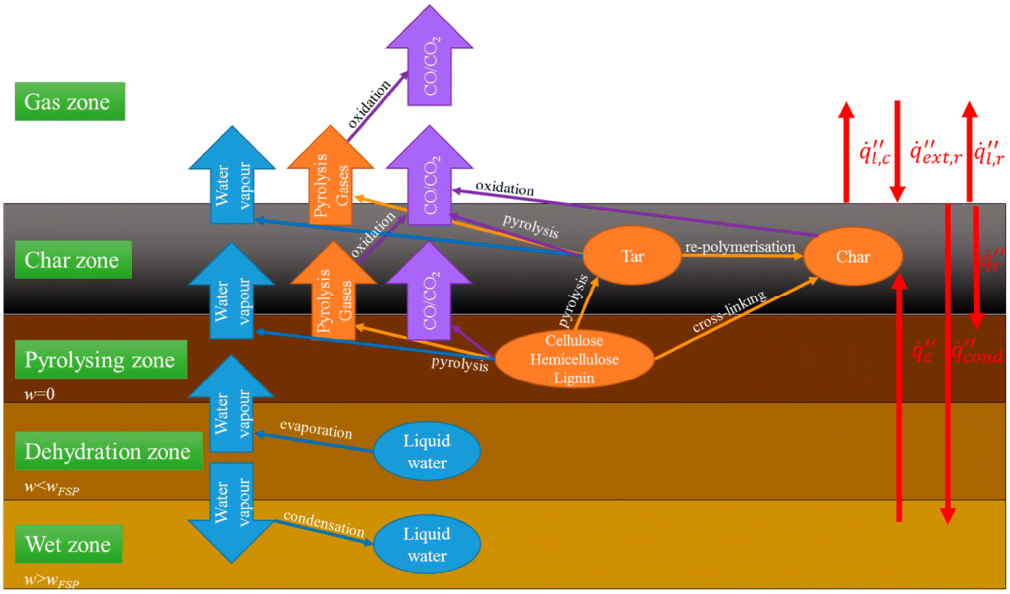

Figure 3. Chemical and physical processes within a burning timber sample [26].

As shown in Figure 3, the ignition of timber forms a charred layer on its surface. The char layer is dualistic in timber fires, serving as fuel and protective barrier. When this char layer acts as a barrier, it insulates the unburned timber from external oxygen, thus retarding the fire spread [44]. Notably, denser wood produces a more compact char layer during combustion, offering enhanced protective attributes [37]. A detailed meta-analysis of the fire resistance literature has shown that the rate of burning, as characterized by the charring rate averaged over the total test duration, is observed to vary with material properties, in particular density and moisture content, which induce a maximum of 18% variability over the ranges expected in design [26].

Pre-charring is an ancient approach used to protect timber against biochemical impacts, but its effectiveness in improving fire performance is still poorly understood [54]. Lin et al. proposed a novel method to generate engineered timber with a uniform and robust surface char layer through slow pyrolysis under low thermal irradiation of 20 kW/m^2 [54]. Lin et al. found that the flammability of the pre-charred timber can be significantly reduced under higher irradiations up to 50 kW/m^2 by increasing the ignition time by up to sevenfold and doubling the ignition temperature to approximately 670 °C. For the tested timber species, they quantified a minimum char layer thickness of 6 ± 1 mm to achieve adequate fire retardancy. The fire hazards of pre-charred timber are also mitigated significantly, where observed flames become weaker, thinner, and bluer than those of virgin timber. The peak

heat release rate of burning pre-charred wood is reduced by over 50%, helping maintain the fire resilience of timber structures [54]. The approach marks a promising direction in fire-safe timber construction, illustrating the potential of engineering timber surfaces to enhance fire resilience.

Timber can sustain both flaming and smoldering fires [55]. Smoldering is a slow, persistent, and flameless form of combustion. Smoldering is well understood in wildfires and coal fires but is not yet recognized as a hazard in timber structure fires [56]. Smoldering can be a structural hazard in timber structures [56]. Timber's smoldering and flaming dynamics have been extensively studied in recent years [51,55,57]. For example, Zhang et al. [51] studied the smoldering-to-flaming transition on wood induced by glowing char cracks and crosswinds. The results showed that the smoldering-to-flaming transition could be observed at approximately 830 °C under external airflow caused by the interactions between smoldering-induced cracks and environmental airflow [51]. However, timber shrinkage, deformation, and cracking affect its smoldering and flaming dynamics, but scientific understanding is still limited [51].

The evolution from ancient and modern timber structures signifies a shift from traditional reliance on natural properties to a more controlled, technologically advanced approach. Diverse timber species and fire behavior underline the importance of species selection in fire safety design, where choosing the appropriate timber type can significantly influence the fire dynamics of a structure. Despite advancements in understanding pyrolysis, ignition, and combustion processes, areas like extinction conditions and smoldering-to-flaming transition remain less defined. For example, the effect of oxygen and heat flux on the burning (including pyrolysis) and ignition behavior of wood is poorly understood [58]. Investigating wood flame characteristics and carbonization behavior in timber structures furnishes critical insights for modeling smoke propagation patterns, facilitating fire safety evacuation, and formulating fire mitigation strategies [28].

2.1.2. Flame-Retardant Treatment

Flame-retardant interventions predominantly alter the timber surface or inherent chemical characteristics to attenuate its combustion rate and minimize heat release [59–61]. Scholars and industry experts have introduced various methodologies to bolster timber's resilience to fire [61–65]. One pivotal approach entails the utilization of specialized flame-resistant surface coatings [66]. These formulations not only thwart the progression of flames but also diminish thermal radiation [67,68]. By establishing a barrier, these coatings inhibit the timber's direct exposure to oxygen and thermal influences, thus moderating the burning process [69]. The impact of intumescent flame-retardant coating location on the fire resistance of inclined timber samples was studied by Lai et al. [70]. Weight loss post-initial ignition was monitored using a weight scale, and a scanning electron microscope was employed to observe the microstructure of both coated and uncoated surfaces postburn [70]. Recently, flame-retardant nano-coatings deposited via layer-by-layer (LbL) assembly have become prominent due to their environmental friendliness and efficiency [71,72]. The LbL process involves a substrate's exposure (dipping or spraying) to a plurality of cationic and anionic macromolecules/nanoparticles [15]. The deposition of multilayered nano-coatings onto timber has been previously studied, although it was primarily restricted to the assembly of LbL coatings on timber fibers [73,74]. Studies of flame-retardant nano-coatings have recently been performed on bulk timber substrates [75–77].

Chemical impregnation processes enhance timber fire resistance by immersing it in tailored chemical solutions, facilitating the absorption of flame-retardant compounds into its internal matrix [64,78–80]. Recent innovative methodologies employ intricate chemical and physical alterations at the molecular level, bestowing timber stability and fire-resistant qualities [70,81]. Jiang et al. delved into the effects of nitrogen-phosphorus retardants on timber thermal degradation. Their findings demonstrated that wood treated with these retardants retained the integrity of its fibers post-combustion [82]. Du et al. fabricated various aqueous halogen-free flame-retardants (FRs) by controlling the weight ratio of

phosphorus/nitrogen/carbon compounds [59]. The prepared FRs showed good dispersion levels under ambient conditions and quickly adhered features on the timber substrate. Due to the synergistic flame-retardant effect of phosphorus/nitrogen/carbon compounds on timber, FR1-coated wood (W-FR1) could form a nonporous, compact, and continuous phospho-carbonaceous layer under fire conditions. Meanwhile, W-FR1 exhibited a higher limiting oxygen index. Moreover, the ignition time of W-FR1 was significantly delayed from 35 to 570 s [59].

Furthermore, Song and colleagues identified that modified timber treatments could elevate its flame-retardant and mechanical properties [80]. Their exploration of hydrothermally treated timber's thermal degradation and fire resistance shed light on the underlying mechanisms reducing combustibility. Fan et al. [63] developed a robust, flame-retardant structural timber that endures high-temperature fame attacks. Natural wood undergoes partial delignification, flame-retardant modification, and densification to obtain ammonium dihydrogen phosphate (ADP)-densified wood. ADP is uniformly impregnated into the timber cell walls to form P–O–C bonds with a dense, cross-linked structure. ADP-densified wood presents enhanced thermal stability, flame retardancy, and mechanical robustness [63]. Different flame-retardant strategies and a comparison of their flame-retardant effects are shown in Table 3.

Table 3. Flame-retardant Strategies and Comparison of Flame-retardant Effects.

Flame-Retardant Treatment	Flame-Retardant Materials	Heat Release Rate (Relative Comparative Value)	Limiting Oxygen Index (Relative Comparative Value)	Source
Impregnation	Boric acid and graphene oxide solutions	Reduced by 72%	47.4%	[79]
	calcium chloride and disodium hydrogen phosphate	Reduced by 48.7%	/	[78]
	colloidal montmorillonite clay	Reduced by 32%	/	[83]
Coating	Guanyl-urea phosphate	/	46.2%	[67]
	Hybrid Organic–Inorganic Halogen-Free Coating	/	>80%	[62]
	Rosin-based epoxy	/	45.8%	[84]
Modification	Transition metal carbide, carbonitride	/	38%	[81]
	Graphene/poly intumescent coating	/	33%	[85]
	Phosphorus acid, pentaerythritol, urea	/	57.5%	[82]

As shown in Table 3, several methods were offered to improve timber and timber-based products' thermal stability, heat insulation, and flame retardancy. The comparison reveals a shift from traditional fire-retardant materials to more advanced, tailored fire stop solutions, underscoring the need for context-specific fire protection strategies. Moreover, the comparative analysis highlights the diversity of flame-retardant strategies, from surface treatments to more profound chemical modifications, each with unique impacts on timber's fire resistance. Huang et al. [81] demonstrated that $Ti_3C_2T_x$ transition metal carbide/carbonitride (MXene) was applied as the synergetic agent, waterborne epoxy resin as the film-forming agent, and ammonium polyphosphate, di-pentaerythritol, and melamine as the intumescent fire-retardant system to prepare $Ti_3C_2T_x$/epoxy intumescent fire-retardant coatings. The results showed that MXene significantly improved the fire-retardant performance of the layer [81]. When the inner wall of a timber house is protected by a fireproof coating, the thermal radiation spread and fire spread are both slower [65].

Hansen-Bruhn et al. [66] utilized a combination of simultaneous thermal analysis, microscale combustion calorimetry, and cone calorimetry to test vacuum pressure-impregnated (boron-free, phosphorus-based) wood and wood coated with a thin layer of water-based intumescent fire-retardant coating (free of melamine, phosphorus-based). Hansen-Bruhn et al. compared the peak heat release rate (pHRR) and total heat release (THR) of three wood samples. The impregnated wood showed the lowest values, followed by the coated timber, compared to untreated wood, with reductions of −34% and −20%, respectively, and THR reductions of −45% and −21%. In contrast, the coated wood delayed sustained combustion and burn-through longer than the impregnated wood, which is crucial for the rate of fire development. Using cone calorimeter data supported by microscale analysis allows for a better understanding of the combustibility assessment of fire-retardant wood. The effectiveness of these modern solutions versus traditional impregnation and coating methods indicates a progression in fire-retardant technology, aiming for higher efficiency and environmental sustainability.

The judicious selection of timber species coupled with apt flame-retardant treatment is imperative to safeguard timber structures. Undertaking a comparative analysis of diverse timbers and their respective treatment methodologies based on efficiency, economic viability, and ecological sustainability affords architects and designers insights for informed decision-making. However, the effectiveness of these retardants necessitates substantial loading, posing potential environmental concerns.

2.2. Fire Resistance of Timber Component and Connection

In addition to material selection and flame-retardant strategies, fire safety research for timber structures focuses on protecting structural components and designing effective fire suppression systems at their connections. Research on timber structural components primarily concentrates on beams and columns, with beams receiving more attention due to their prevalence and vulnerability in structures. Effective design strategies and fire protection measures for these components can notably increase the resilience of timber structures against potential fire hazards. Engel et al. [86] investigated five fire stop variants that limit fire spread on timber facades. For this purpose, five fire tests using various types of timber facade claddings and different fire stops were conducted as full-scale tests and compared to the existing findings. The influences and interactions between the material qualities of the external wall behind the facade cladding, the construction type of the timber facade cladding, the design of the substructure, the depth of the ventilation gap, and the design of the fire stops were investigated. In evaluating the fire stops, the design of the interior corners, the joint design, and the influence of thermal expansion were examined. Finally, design proposals for fire stop design at timber facades to limit fire spread were derived based on this evaluation [86]. The current primary research efforts on component fire protection and connection fire protection are shown in Table 4.

Table 4. Fire resistance of timber Component and Connection.

Author	Type of Article	Description	Source
Maraveas et al.	Review	Performance of timber connections exposed to fire	[27]
Wei et al.	Research article	Presented the fire performance of typical components of timber structure buildings	[87]
Ulusoy S.	Research article	A structure made of timber is investigated under different times of fire exposure in order to determine the cross-section and timber type of structural elements	[88]
Audebert et al.	Research article	Experimental and numerical analysis of timber connections in fire	[89–91]

Table 4. *Cont.*

Author	Type of Article	Description	Source
Piloto et al.	Research article	Light timber-framed wall under fire: Effect of the load and cladding	[92]
Qin et al.	Research article	Structural performance and charring of loaded timber under fire	[93]
Racher et al.	Research article	Thermo-mechanical analysis of the fire performance of dowelled timber connection	[94]

Inherently, lightweight timber frames constructed using certified fire-resistant materials manifest commendable fire-resistant properties when adhering to construction standards [86]. Typical protective layers in timber-framed structures, including wall and floor panels, deploy gypsum or cement-fiber boards. The fire resistance of these structural elements predominantly hinges on the protective layer's fire-retarding capabilities [95]. Among these, gypsum boards, delineated into fire-rated and standard types, are mainly employed, typically affixed to timber studs or joists using self-tapping screws [96]. Based on their style and thickness, variables of gypsum boards can offer fire resistance durations spanning 0.5 to 3.0 h [97]. Enhancing the consistency of timber components or integrating multilayered cross-laminated timber panels, such as CLT, can further augment their flame-retardant duration. Nevertheless, the combustion of adhesive granules within CLT can emit toxic gases. To address this, Lee et al. pioneered an environmentally congenial ethylene vinyl acetate substitute for the native adhesive within CLT, dissecting the correlation between flame retardancy and clay content [36].

2.2.1. Beam and Column Design for Fire Safety

In the event of fires, the structural integrity of timber structures is compromised expeditiously due to the steep decline in their load-bearing abilities, accentuating the imminent risk of collapse [87]. Among the array of structural components, beams serve as the linchpin for ensuring stability during incendiary episodes. Elevated thermal exposures can lead to beams experiencing a swift deterioration in their capacity to bear loads. Consequently, meticulous design strategies must consider the cross-sectional dimensions of beams. Furthermore, integrating incombustible panels or applying fire-retardant coatings is viable for enhancing beam fire longevity. In alignment with regulatory benchmarks, China's GB50005-2017 delineates that the fire endurance for beam elements should meet or exceed a threshold of one hour. This emphasizes a minimum bearing length of 90 mm on supports, ensuring a snug interface [98]. Concurrently, the International Organization for Standardization's ISO 834-6 [99] posits specialized guidelines for fire resilience tests for beams, necessitating an exhaustive evaluation of their load-bearing efficiency, structural soundness, and thermal insulating attributes before incorporating them into structures.

In fires, columns are vital vertical load-supporting entities that ensure edifice stability. Deploying mechanically superior timber species, predominantly hardwoods, can substantially augment the fire endurance of columns. Engineering columns with an encapsulated design paradigm curtails the permeation of flames and heat, effectively decelerating the elevation of internal temperatures. Furthermore, integrating insulative constituents, such as rock wool or fire-retardant mortars, can notably temper the rise in core temperatures. According to the regulatory framework established in China's GB50005-2017, columns within timber structures must exhibit combustibility parameters synonymous with flame resistance, coupled with a fire endurance benchmark set at one hour. The column base must be securely interfaced with the foundational substrate, necessitating reliable anchoring mechanisms. Complementing this, the International Organization for Standardization's ISO 834-7 [100] delineates explicit criteria for assessing the load-bearing capabilities and the

cross-sectional robustness of columns, thereby ensuring their suitability in withstanding fire-induced stresses.

Studies on the fire performance of timber beams and columns underscore the necessity of considering structural integrity under fire conditions. The comparative analysis of these studies above highlights the varied approaches to enhancing fire resistance in beams and columns, such as employing incombustible panels or encapsulating columns with insulative materials. The review of international standards, including China's GB50005-2017, ISO 834-6 for beams, and ISO 834-7 for columns, provides a comparative perspective on global fire safety benchmarks. These standards set thresholds for fire endurance and emphasize structural and thermal insulating properties, illustrating the international consensus on the importance of comprehensive fire safety design.

2.2.2. Connection Design for Fire Safety

In timber structures, the connections are often the weakest among the various structural components [94]. In fire and normal conditions, they govern the structure's bearing capacity and mechanical behavior [94]. Due to their complex geometrical, physical, and material configurations, the behavior of the connections in fire is more difficult to predict [89,91]. An extensive experimental and numerical program based on fire tests of timber connections under various mechanical loadings has been performed in France since 1999 [91]. The adoption of non-metallic fastening mechanisms, exemplified by ceramic bolts renowned for their exceptional fire-retardant attributes, can substantially elevate the thermal endurance of these joints. Enclosing or supplementing the joint vicinity with specialized fire-resistant compounds aids in attenuating direct thermal and flame interactions. Moreover, a nuanced approach toward connection design, emphasizing streamlined configurations and minimizing voids or perforations, is instrumental in thwarting the ingress of heat and flames, thus reinforcing structural robustness during pyrolytic episodes [89].

Laplanche [101] and Audebert et al. [89–91] initiated numerical studies to simulate the thermo-mechanical behavior of timber connections exposed to fire. The developed numerical model was validated by comparison with experimental results. It represents the fire behavior of timber connections and gives fire resistance durations following the observed values. Building on the foundation of the author's previous research [89,90], Audebert et al. [91] presented a new formula to predict the fire resistance of connections in timber structures, and the commonly used thicknesses of timber elements and diameters of fasteners were chosen in the study. Considering the four main parameters influencing the fire resistance of the connections (type and diameter of fasteners, thickness of timber members, and load ratio), the model is used to analyze the combined influence of these factors and to realize a calibration based on the experimental design approach. For timber-to-timber connections, steel-timber-steel connections, and connections loaded with an angle to the grain, as the tendency is similar between the observed and calculated values, the use of modification factors in the formula makes it possible to obtain fire resistance values in good accordance with the experimental values, with a safety margin of approximately 20% [91]. This method also guarantees fire resistance values greater than 30 min, which is currently the validity limit of the method proposed by Eurocode [91]. The method presented here is the first proposal to predict the fire resistance of timber connections more precisely than the current existing approaches. The proposed method, which is simple to apply, can be used by engineers to design timber connections under fire exposure with greater accuracy than current standards [91].

Song et al. [102] presented the results of a fire resistance test of traditional timber mortise–tenon connections, focusing on loosening, decay, and cracking issues at the connection area. They conducted static load tests and fire resistance tests on six full-size connection samples. The progression of temperature, charring depth and rate, and the degradation of the rotational stiffness of the connection with fire exposure time were quantified. The study found that service damage significantly impacts the fire resistance performance of traditional timber mortise–tenon connections. The charring rate calculated from the beam-

column section was close to the recommended values in the softwood design standards. The displacement of connections damaged by wood decay and cracking increased by 69% and 90%, respectively, compared to undamaged connections after direct exposure to fire for 30 min. After 30 min of fire exposure, the rotational stiffness of damaged joints could drop to 11.4% of the initial stiffness of intact joints at ambient temperature. The degradation of connection stiffness and its impact on the redistribution of moments in adjacent beams and columns and the fire resistance limit warrant further investigation [102].

The results of these studies highlight the need to update design standards and practices in the field. The studies above illustrate different facets of timber connection behavior under fire conditions. Laplanche and Audebert focus on numerical modeling and experimental validation, offering a formula for predicting fire resistance in connections, while Song et al. discuss the practical effects of service damage on traditional timber mortise–tenon connections. This juxtaposition reveals the complexities in connection behaviors, from theoretical models to real-world degradation due to fire exposure. Furthermore, this comparison accentuates the shift from traditional timber connections to contemporary, fire-resistant designs and materials, emphasizing the critical role of innovation in enhancing the fire safety of timber structures.

3. Fire Prediction and Early Warning for Timber Structure

3.1. Flame Characteristics in Timber Structure

Compared to timber, the thermo-physical response of timber structures in fire is much more complex [95]. During the fire propagation phase, convective heat transfer and thermal radiation drive the flames and elevated temperatures to spread to other parts of the timber structure, prompting additional timber to undergo thermal decomposition and combustion. This leads to a progressive thickening of the char layer and further spread of the fire, compromising the structural load-bearing capacity of the timber and potentially culminating in structural failure and collapse. Thus, beyond evaluating the fire performance of individual components, a holistic assessment of the entire structural system and its interaction with the fire control system is necessary.

A detailed report of a series of full-scale fire experiments on a two-level mass timber apartment was presented by Hoiehler et al. [103]. This may be the most detailed scientific study of fire testing of timber structures [103]. Su et al. [104] conducted a full-scale fire test of compartments constructed of 5-ply CLT. It was found that using a gypsum board is critical in protecting CLT from fire and that ventilation conditions also play an essential role. Using heat-resistant adhesives in CLT to minimize delamination was also suggested [104]. Noaki et al. conducted a series of full-scale compartment fire experiments to understand the fire behavior in compartments containing timber structures [14]. The opening size and the surface area of combustible materials were adjusted to investigate the differences between ventilation-controlled and fuel-controlled fires [14].

Furthermore, a model of compartment fires that considers this pressure increase was developed by Noaki et al., and it can more accurately reproduce the type of fire (fuel-controlled or ventilation-controlled) and its temperature characteristics than models that do not [14]. In tall timber structures, fire has a pronounced tendency to propagate vertically. This is particularly evident as flames and thermal gases rapidly rise along building exteriors and voids, intensifying the potential fire threats [13]. Given timber structures' inherent fire safety concerns, many countries have instituted height restrictions for such buildings, primarily due to these fire-related considerations [105].

To better conduct a fire risk assessment in ancient structures, the dynamic burning behavior of common fuels was analyzed in the work of Hu et al. [106]. Hu et al. conducted experimental investigations for flammability and fire spread behaviors of combustible materials usually used in ancient Chinese structures made of natural fiber and synthetics. Considering practical applications, the size of each sample was chosen from the standard-testing size to the actual extent. Naturally based materials easily ignite and burn quickly, and some synthetics reveal a sharp increase in the heat release rate [106]. Scholars have

also researched the spread of fires in ancient timber structure complexes. In ancient villages, the spread of uninterrupted fires caused significant damage to timber structure complexes [107]. Yuan et al. [107] studied the characteristics and underlying mechanisms of fire in full-scale timber houses. The results showed that, in timber houses, fire spread was mainly influenced by the slope, the distance between places, and wind direction [107]. The implementation of experimental work lays a solid foundation for the numerical simulation of fire characteristics in timber structures. However, the limitations of the standard fire test (and associated curve) are widely understood [95].

With advances in computational science, the study of fire behavior in timber structures has evolved to integrate experimental measurements and numerical simulations. Using advanced computer simulation technologies to model the impact of fires on the entire structure ensures that designs meet safety requirements across various fire scenarios. For example, Hopkin et al. proposed implementing 'heat of hydration' routines intended for curing concrete structures to simulate timber structures' heating and cooling process. Such routines are available in many commercial FEA software packages. Adopting hydration routines allows the heat generation process, as a result of oxidation, to be considered in parallel with solid phase heat transfer using apparent thermal properties [95].

Currently, the fire dynamics simulator (FDS) is a preeminent methodology in fire dynamics simulations [108]. Shi's work established the FDS model based on full-scale fire experiment parameters. Rectangular grids were used with the size $\Delta x = \Delta y = \Delta z = 0.2$ m. The temperature–time curves of the cabin and PolyU/USTC atrium obtained from the experiment and FDS simulation were compared [109]. The results showed that the FDS model has excellent predictive ability for the cabin's internal temperature and the plume area's temperature in the large-space atrium [109]. Before using the FDS model to simulate the flashover of the large-space timber structure, the accuracy and reliability were further verified using experimental data obtained from three large-space fire experiments conducted by Shi et al. [109]. Zhang et al. also employed the FDS for simulations, considering various spatial dimensions, heat release rates from fire sources, and types of fire growth scenarios [17], as shown in Figure 4. Harnessing the data from timber structures facilitates the development of these simulation models [22].

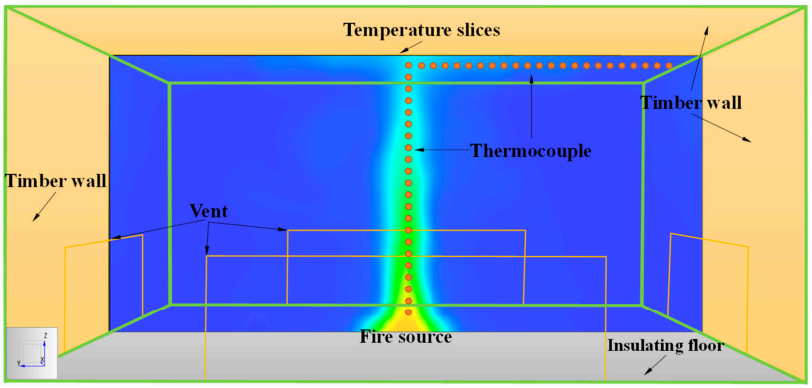

Figure 4. FDS simulation view of the cell in the work of Zhang et al. [17].

Tung et al. first conducted room fire experiments in a full-scale model storeroom with a high fire load in an ancient timber structure to explore fire growth and spread via heat release rates and indoor air temperatures [25]. Numerical simulations mimicking the fire scenario were conducted using FDS software to predict fire features, and these findings were compared with the experimental results. The results showed that development trends during fire growth were aligned but displayed time differences. During the fully developed fire period, the heat release rates from the experiment were less than the predicted values [25]. Hayajneh et al. conducted a numerical simulation study on the fire resistance performance of multi-layer Cross-Laminated Timber (CLT) structures using Computational Fluid Dynamics (CFD) [110]. The study examined the spread of flames after a fire, the air

temperature inside and outside the building, gas concentrations, and the prediction of Heat Release Rate (HRR) in timber structures. The model validation demonstrated that CFD tools can be used to predict fire scenarios in high-rise CLT buildings. Additionally, the data obtained can guide the fire protection design of timber structures and assist in emergency rescue operations [110].

In timber structures, charring of the timber surface would maintain structural stability and be accompanied by smoke [13]. Although treating timber products with fire retardants delays ignition under low radiative heat flux, toxic combustion products and unburnt fuel are emitted immediately upon burning [13]. More smoke and higher toxic gas concentrations, such as carbon monoxide (CO), would be given off upon burning some fire retardants under high flashover heat fluxes [13]. The majority of fire-related deaths are caused by the inhalation of toxic gases [111]. Hansen-Bruhn et al. [111] studied the fire toxicity of untreated wood, pressure-impregnated wood, and surface-coated wood under a series of fire conditions. They replicated various fire stages using a steady-state tube furnace, sampled fire effluents and determined the yield of toxic products using High-Performance Ion Chromatography and Spectrophotometry. Despite different phosphorus contents, both treatment methods were effective in preventing fire progression, with less than 50% mass loss during flameless oxidative pyrolysis and a reduced likelihood of sustained flaming. During under-ventilated combustion, all samples produced hydrogen cyanide (HCN), and both fire treatments produced phosphoric acid (H_3PO_4). The smoke toxicity was assessed based on the asphyxiants CO and HCN as effective dose fractions for incapacitation. This work indicates that impregnated wood has a significantly higher anticipated smoke toxicity than coated wood when the fire reaches an under-ventilated stage, due to the large emission of carbon dioxide [111].

Due to the fast upward movement of smoke under the stack effect, spreading toxic smoke in tall timber structures would lead to a hazardous environment, and the smoke hazards of using new timber products in building construction should be monitored [13]. The emission of toxic gaseous combustion products from timber constructions influences the time needed to evacuate people from a building during a fire [112]. Measuring CO emissions, Karpovičet al. focused on toxicity analysis determined by non-standard and standard research methods of smoldering and flaming pine timber, both non-treated and treated with fire retardant solutions [112].

In building regulations, the classification requirements are typically given concerning the fire load density [97]. In Finland, for example, a fire load density of 600 MJ/m^2 of unit floor area is assumed for dwellings in the prescriptive part of the fire code. In the fire safety engineering approach, the total amount of combustible parts of the construction must be included in the fire load [97]. Nan et al. [113] investigated the effect of non-uniform fuel load distribution on fire development in a sufficiently ventilated space, and the work revealed the possible underestimation of fire hazards by assuming evenly distributed fuel loads and suggested considering design fire scenarios of non-uniform fuel load distribution in performance-based fire safety design [113]. In total, visualizing and analyzing the macroscopic combustion behavior of timber structures affords a theoretical foundation for emergency planning and firefighting interventions [53,93,107].

The comparative analysis presented above highlights the complex nature of fire propagation in timber structures, which is influenced by factors such as material selection, structural design, and ventilation conditions. The advancements in fire modeling techniques demonstrate how improvements in computational methods have increased the precision of fire behavior predictions in timber structures. Together, these endeavors represent a comprehensive approach that integrates traditional fire testing with advanced simulation techniques, thereby improving the fire safety design and risk assessment of timber structures. This integrated methodology informs engineering practices and aids in shaping regulatory frameworks to reduce fire risks in timber structures. Additionally, the consideration of toxic gas emissions is crucial in fire safety planning for timber structures.

3.2. Fire Detection

With technological advancements, sensor technology has become extensively integrated into fire early warning systems [114–116]. These sensors promptly detect preliminary signs of fires, facilitating early alarms that provide crucial time for evacuation and fire countermeasures [117,118]. Various sensors possess unique attributes, allowing a tailored combination following the specific conditions and needs of timber structures and ensuring timely detection and countermeasures during a fire outbreak [116]. For example, infrared sensors primarily detect infrared radiation from objects, serving as noncontact temperature measurement devices. When an object's temperature rises, it emits infrared radiation. These sensors can detect such radiation, converting it into electrical signals. Since the initial combustion of timber might not immediately produce apparent flames or smoke, infrared sensors are suitable because they can detect temperature anomalies in wood. These sensors are fast-reacting, highly precise, and unaffected by light or smoke [119].

Thermal sensors measure temperature or temperature changes. Based on the characteristics of their internal materials, they produce resistance or voltage changes when temperatures fluctuate. Thermal sensors can identify concealed fire sources early in confined or semi-confined timber spaces, such as timber roofs or partitions [19]. They continuously monitor environmental temperatures and effectively respond to abrupt temperature changes. While conventional thermal sensors are substantially constrained by their placement, often failing to provide comprehensive fire information in large enclosed spaces [120], the recently developed thermal imaging fire detection systems show promise in addressing these limitations. Such systems, utilizing three-dimensional thermal imaging, can efficiently map the entire monitored space, swiftly identify the epicenter of elevated temperatures, and project the potential trajectory of fire propagation. Given the rapid flame spread inherent to timber structures once ignited, enhancing the predictive capabilities of these sensors becomes paramount. It is anticipated that the role of thermal imagers in fire detection will witness significant expansion in future research and applications [120].

Due to the fast upward movement of smoke under the stack effect, spreading toxic smoke in tall timber structures would lead to a hazardous environment, and the smoke hazards of using new timber products in building construction should be monitored [13]. In fire alarm systems, smoke detectors play a pivotal role in quantifying smoke particle concentrations. Utilizing photo-electric or ionization mechanisms, these detectors are vital for monitoring predominantly timber-constructed habitats, given their capability to promptly detect and alert to early fire phases, thus facilitating timely evacuations [10]. However, the inherent combustible nature of timber structures means that their combustion yields smoke replete with toxic byproducts [13]. This introduces a nuanced interplay between fire safety and environmental sustainability, necessitating an enhanced rigor in the design criteria for smoke detectors employed in these timber structures.

Gas sensor-based methods are more effective than traditional smoke or temperature-based analytical methods, since gases are produced in every fire. In contrast, not all fires emit smoke aerosols during the combustion process, and the changes in ambient temperature in the early stage of fire are too small to be sensed [119]. Among the fire gases, CO, which has trace concentration levels (down to 0.1 parts per million by volume (ppmv)) in ambient air but is produced at high levels (up to vol%) in smoldering fires, is a promising gas for early fire detection [118]. Dang et al. developed a laser-based sensor for the high-precision and susceptible measurement of CO produced by fires [119]. The diagram of the CO sensor, gas mixing, and sampling systems in the work of Dang et al. is shown in Figure 5.

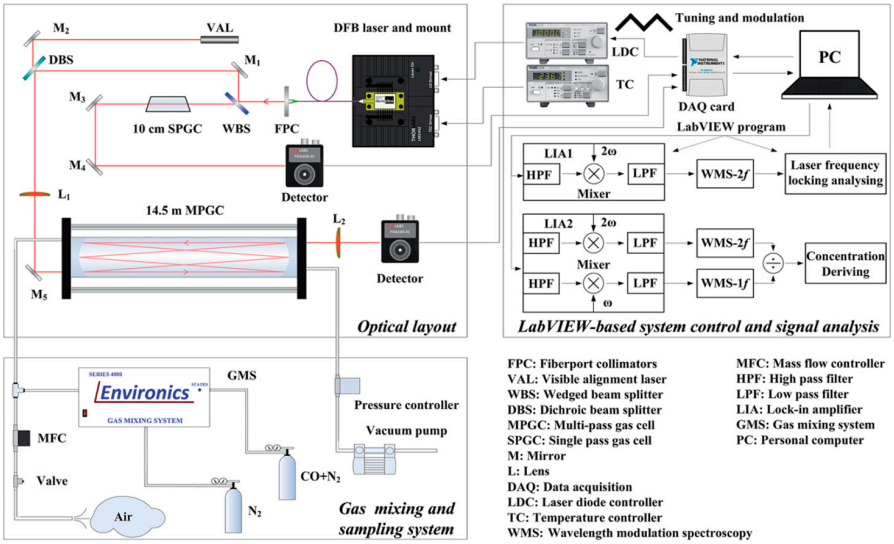

Figure 5. Diagram of the CO sensor, gas mixing, and sampling systems [119].

As shown in Figure 5, the CO sensor system consists of a multi-pass gas cell, a commercial DFB laser supplied by Nanoplus GmbH (Germany), two indium gallium arsenide infrared detectors, reflective optics, and electronic modules. A commercial gas mixing system with two gas cylinders is employed in gas-related work [119]. The sensor relies on a continuous wave, distributed feedback (DFB) laser emitting at ~2.33 mm as the excitation source. A wavelength modulation spectroscopy (WMS)-2f/WMS-1f strategy was adopted to isolate complex, overlapping spectral absorption features at ambient pressures and to achieve excellent specificity and high detection sensitivity. The results showed that the limit of detection and the optimal integration time were 1.18 ppmv and ~205 s (corresponding to a measurement precision of ~0.08 ppmv on average), respectively. As a field application, the sensor was used to detect fires from paper, cotton, and pine wood early, verifying its reliable and robust operation [119].

Fire detection in timber structures is advancing through the integration of sensor technologies. The aforementioned studies underscore the varied functionalities and appropriateness of different sensors in diverse fire scenarios in timber structures. Recent advancements in sensor technology, such as high-precision CO sensors, mark significant progress beyond traditional methods. The integration of these sophisticated sensor technologies into fire detection systems for timber structures is a critical step towards improved fire safety. Infrared and thermal sensors enable early detection of thermal anomalies, while gas sensors provide extensive fire detection capabilities, effective even in smoldering conditions where smoke or temperature changes might not be immediately detectable. Implementing these technologies can enhance fire management strategies in timber structures, particularly given their inherent combustibility and the propensity for rapid fire spread once ignited.

3.3. Early Fire Warning in Timber Structures

Data collection, processing, and interpretation are paramount in contemporary fire warning systems. This is accentuated in timber structures, where the developing indications of a fire might be nuanced, thereby highlighting the necessity for exacting data scrutiny [121].

In the event of a fire in a timber structure that is not promptly extinguished, severe consequences can ensue. As shown in Figure 6, these are typical cases of timber-frame dwellings in the Western Hunan area of China. Probabilistic predictions regarding fire incident occurrences can be computed based on the fire risk indicators for timber structures, as presented in Table 5. Additionally, Bayesian networks have been employed for fire risk evaluations of timber structures [75]. A comprehensive fire risk assessment model

is devised through an examination of timber structures' fire risk indicators, enabling the identification of pivotal influencing factors and the proposition of effective measures.



Figure 6. Typical cases of timber-frame dwellings in the western Hunan area, China [22].

Table 5. Description of the fire risk index for timber structures.

Description	Method	Index	Source
Ancient structure	Analytic Hierarchy Process, Paired Comparisons	Passive Protection System	[122,123]
		Active Protection System	
		Fire Management	
		Building Characteristic	
Modern building	Consumer Grade Weather Stations	Relative humidity	[19]
		Relative temperature	
Ancient building	Linear additive model	Brick structure conditions	[124]
		Timber column conditions	
		Accessibility by fire service and active fire protection system	
		Other fire hazards	
Modern building	Overall Numerical Model	Indoor and outdoor temperature	[121]
		Indoor moisture sources	
		Timber panel moisture sorption processes	
Ancient building	Bayesian network	Building parameters	[12]
		Cultural significance	
		Environmental factors	
Ancient building	Entropy and XGBoost	Timber wall	[18]
		Timber door	
		Cultural collection	
		Fire resistance	
		Electricity/Gas installation	
		etc.	

As shown in Table 5, a comprehensive fire risk index tailored specifically for ancient structure complexes was introduced. The index adopts a tripartite division encompassing temporal, spatial, and attribute scales to holistically assess the inherent fire risks of heritage sites. Under the temporal scale, critical monthly parameters are considered, including visitor traffic, temperature, precipitation, and relative humidity. The sheer volume of visitors can potentially elevate the risk due to careless human behaviors, while climatic factors, such as high temperatures and low precipitation, could amplify fire susceptibility. The attribute scale dives deeper into the intrinsic characteristics of the structure itself. It examines architectural elements, such as pillar height and the presence of timber components-walls and doors. The type and number of cultural relics, the structure's function, public accessibility, fire resistance rating, and fire separation distance are also integral components of this assessment.

Traditional courtyard-style wooden architecture is a unique heritage of timber structures, distinct from conventional wooden architectural units and featuring unique structural characteristics. Ma et al. [125] proposed a scientific and effective method for assessing the structural safety of traditional courtyard-style wooden buildings. Initially, they introduced a component importance calculation method based on the Improved Analytic Hierarchy Process to obtain quantified weights for components of traditional courtyard-style timber structures. Subsequently, by integrating the structural features of courtyard-style buildings, they established an evaluation system for structural safety, including assessment indicators and weights. Additionally, they developed quantitative, automated safety assessment software for courtyard-style timber structures. The research results offer references for the safety evaluation and preventative protection of traditional courtyard-style timber structures [125].

Additionally, modern interventions, such as the number of protective layers, electrical/gas installations, and the presence of fire/smoke detection and extinguishing systems, play a crucial role in determining the structure's resilience against fire incidents. In essence, this multifaceted fire risk index is instrumental in gauging the potential vulnerability of ancient structure complexes to fires. It encompasses various determinants, from environmental factors to structural attributes and modern interventions, providing a robust heritage site conservation and fire safety planning tool.

Until now, machine learning has allowed computers to improve task performance through experience [126]. In the realm of fire alerts, it recognizes patterns and trends potentially leading to fires. Deep learning, a subset of machine learning, employs neural networks for data processing and pattern recognition. The deep learning process is unparalleled for intricate fire scenarios, especially with data fusion from multiple sources. For instance, convolutional neural networks detect flames or heat sources from imagery or spatial data such as infrared camera captures. Recursive Neural Networks discern long-term and short-term data trends for fire development predictions. Integrating and analyzing data from diverse sensors using deep learning models ensures comprehensive and precise fire alerts [127]. It offers robust support for emergency fire responses and strategic decision-making.

The researchers explored a variety of fire risk assessment methods for timber structures, ranging from traditional analytical hierarchy processes to contemporary Bayesian networks and machine learning techniques. Traditional methods, such as the Analytic Hierarchy Process used in historic structures, depend on paired comparisons and focus on passive and active protection systems. Modern techniques, like Bayesian networks and machine learning, in contrast, offer a dynamic, data-driven approach, adept at managing complex datasets and generating probabilistic predictions. This evolution reflects a shift from static, conventional risk assessment methods to active, data-centric strategies in fire risk assessment. Furthermore, the aforementioned studies emphasize the significance of considering diverse factors in fire risk assessment, including the structure's physical characteristics, environmental influences, and human elements. These studies demonstrate a trend towards sophisticated, data-driven approaches in fire safety, capable of analyzing

intricate datasets from multiple sources for more thorough and precise fire risk assessments. While traditional methods lay a solid groundwork, integrating advanced data analysis techniques enables more detailed and predictive fire safety strategies.

4. Emergency Response to Fire Incidents in Timber Structures

The swift and safe egress of occupants during fire emergencies underscores the necessity of comprehending human mobility dynamics within architectural confines [128]. This is accentuated in high-rise timber structures, where strategies for vertical evacuations during infernos demand specialized attention. Furthermore, the post-fire emergency response in ancient timber structures presents intricate challenges magnified by the inherent complexities of timber structure complexes. Given the unique characteristics of these complexes, formulating a judicious fire rescue blueprint is indispensable for productive emergency management in such structures. As illustrated in Figure 7, compared to individual timber structure projects, the fire risk and the complexity of evacuation during a fire are relatively increased in clusters of timber structures.



Figure 7. Traditional villages in the western Hunan region, China [22].

4.1. Real-Time Intelligent Evacuation Guiding System

Building evacuation strategies affects the success of an emergency response plan in reaction to a disastrous event in a structure [128–130]. The evacuation challenges in multistory and ancient timber structures post-fire are considerably more intricate than those in single-story timber structures. Modern multi-floor hybrid structures usually include complex systems and intense closeness, significantly increasing difficulties for the safe evacuation of people in the event of an accidental fire occurrence [131]. Li et al. [131] proposed a fire propagation-driven dynamic intelligent evacuation (FPDDIE) model. The FPDDIE model includes the optimal path planning method, evacuation time prediction model based on the stacking integration strategy, and framework design of active instructions. The evacuation time prediction model can help people choose safe paths. Finally, a large gymnasium is taken as a real case study to verify the effectiveness of the proposed model and method [131]. Balboa et al. proposed an intelligent evacuation guiding system for complex structures [132]. It uses information from fire protection systems and calculates the optimal evacuation routes from real-time simulations to guide evacuees by dynamic signage through the safest and fastest available paths. The proposed approach was tested in a multi-enclosure structure using participants. Balboa et al. found that 89% of participants followed emergency exit signs. The reported results also indicate that the system

may positively impact evacuation time (reduced from 28.41% to 59.79% with this system). Balboa et al. also found that participants moved significantly more quickly when using the system.

The studies by Li et al. and Balboa et al. present different approaches to evacuation in timber structures. Li et al. focus on a fire propagation-driven, dynamic, intelligent evacuation model, which optimizes path planning and evacuation time prediction. In contrast, Balboa et al. implement an intelligent evacuation guiding system using real-time route optimization simulations. While both approaches aim to enhance evacuation efficiency, the model of Li et al. emphasizes predictive planning, whereas that of Balboa et al. system focuses on real-time adaptability and guidance. These findings support the hypothesis that, in practice, smart egress systems improve evacuation behavior [132].

Balancing the exigencies of enhanced architectural fire safety with the preservation of intrinsic historical features presents a dilemma. In a noteworthy illustration, historic theatres in Italy have devised solutions for fire evacuation in heritage structures. To this end, D'Orazio et al. incorporated photoluminescent materials as a pedestrian guidance mechanism, as exemplified in Figure 8 [133]. This approach balances fire safety with the preservation of historical features, offering a low-impact solution for emergency evacuation in heritage structures. The comparison highlights the diverse requirements and solutions applicable to different types of timber structures, from modern to historic.

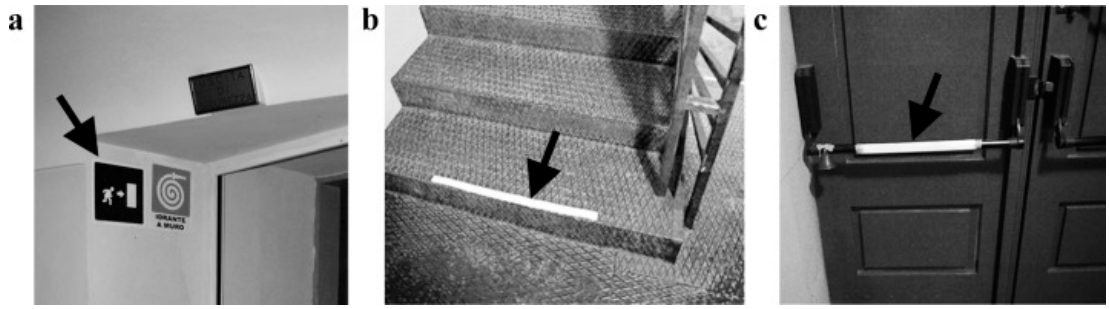

Figure 8. Luminescent materials (marked by black arrows): (**a**): directional sign; (**b**): strip on the first and last stair-steps; (**c**): strip on the anti-panic handle at the exit [133].

Additionally, virtual and augmented reality techniques offer effective strategies to enhance personnel evacuation efficiency in fire scenarios. For instance, virtual reality technology can provide residents and employees with evacuation training in simulated fire environments, honing their skills to handle real fire emergencies. Augmented reality glasses or other devices can give intuitive evacuation routes and safety tips during fires. The recent proliferation of consumer-level virtual reality (VR) headsets is creating a growing user base in demand of highly controlled immersive virtual environments (VEs) [134]. Bourhim et al. take advantage of the commercial availability of these VR devices to build a high-rise residential structure fire escape, which provides a highly immersive VR simulation game approach designed to simulate pre-evacuation human reactions in fire emergencies. Bourhim et al. replicated this fire scene in their VE using the unity 3D game engine and the head-mounted VR display. The results gathered from this virtual simulation were compared to the data from actual fire conditions to test the efficiency of the information provided by this VE. Furthermore, they propose a comprehensive evaluation system for VE usability using the analytic hierarchy process and the fuzzy evaluation approach. Overall, the study results confirm the efficiency of VR technology for research on people's pre-evacuation behavior under fire [134].

In summary, the comparative analysis of these varied studies highlights the need for customized evacuation strategies for different timber structure types. This analysis marks the transition from conventional methods to advanced, technology-driven solutions, each tailored to meet unique challenges in fire emergency situations. The integration of cutting-edge technologies, such as smart evacuation systems and virtual reality, combined

with innovative, low-impact solutions, like photoluminescent materials, demonstrates the wide array of options available to enhance fire safety in timber structures.

4.2. Emergency Response

4.2.1. Fire Suppression Systems

In fire emergencies, minimizing damage and loss is crucial, and this largely depends on the implementation of effective firefighting strategies. Among these, automatic fire suppression systems play an essential role in extinguishing fires. These systems vary, each categorized by its unique operating mechanism and specific use. Key types include water mist systems, utilizing fine water sprays for cooling and extinguishing flames, and foam fire suppression systems, aimed at smothering fires by separating the fuel from oxygen. Both types are customized for distinct fire situations, providing focused and effective responses in fire emergencies.

Water mist systems employ fine water droplets to cool and smother fire sources directly, using generated steam to dilute oxygen in the fire zone. When fire is detected, the system sprays fine water mists through nozzles, rapidly evaporating these droplets to absorb substantial heat, lowering fire temperatures. Water mist systems are especially suitable for high-ceiling, open timber spaces like timber halls or lofts. They effectively suppress rapid flame spread and quick heat release but might increase structural humidity in specific scenarios, necessitating additional waterproofing measures [135]. The effectiveness of fire suppression systems in protecting mass timber construction was experimentally investigated by Ko et al. [136]. The performance of high- and low-pressure water mist systems was compared with sprinkler systems in a residential fire scenario involving exposed mass timber structures. The tested water mist and sprinkler systems successfully maintained the room temperature and gas concentrations tenable, but the smoke obscuration deteriorated rapidly. Although the tested systems resulted in fire damage on the exposed timber walls, a high-pressure water mist system with a wide spray angle demonstrated rapid fire suppression and less damage to the walls. The performance of sprinkler systems was comparable, yet they were the least effective due to the large amount of water used. A large water pool was formed on the floor in all tests, with the size proportional to the total water discharged during the test. Additionally, the moisture contents of the mass timber panels indicated that water could penetrate the floor–wall interface in a typical assembly [136].

Foam fire suppression systems form insulating and cooling foam layers by mixing water with foaming agents [137,138]. For example, a multi-component compressed air foam system was developed with newly prepared multicomponent foaming agents. The timber crib and oil pool fires were extinguished under different conditions, such as foam concentration, mixing chamber forepart structure, and working pressure. It was found that the foam concentration had sufficient effects on fire extinguishing efficiency, and an optimized concentration value existed. For instance, this value is approximately 2.2% for diesel oil pool fires and about 4.0% for timber structures. The results also show that the system with a coaxial mixing chamber has greater efficiency than a T-shape. The effects of working pressure on fire extinguishing are evident in experiments, i.e., the higher the working pressure, the more readily the fire is extinguished [138]. In contrast, foam fire suppression systems offer an insulating layer to smother fires but pose challenges related to cleanup and potential environmental harm. This comparative analysis highlights the trade-offs between different suppression systems, emphasizing the importance of selecting the appropriate system based on the specific requirements of the timber structure.

4.2.2. Customized Fire Suppression Solutions

Timber structures, during combustion, liberate toxic gaseous byproducts, which can constrict the window of time available for a safe evacuation, heightening the imperative for prompt intervention by emergency teams [112]. Combining various fire suppression systems and measures is typically needed for specific timber structures to ensure maximum fire safety. Incorporating smoke and temperature detectors can achieve quick system responses,

activating systems as fires begin. Zheng et al. found that safety systems, in the form of smoke alarms and sprinklers, played a much more significant role in reducing the severity of a fire than the type of construction material used [10]. Contrary to conventional water application methods, mist systems have manifested superior efficiency. The diminutive droplets promptly attenuate ambient temperatures and curtail the oxygen supply, thus inhibiting fire propagation and concurrently minimizing water-induced damage. Specific suppression solutions can be designed depending on a timber structure's distinct regions and functions [136]. For instance, storage areas might be more compatible with foam suppression systems, while public activity areas might favor water mist systems. Ensuring that fire suppression systems remain optimal through regular checks and maintenance guarantees prompt responses during fires.

Hou et al. proposed an innovative procedure to determine optimal fire station locations considering the fire development pattern from different possible fire origins and the potential loss from daily and post-earthquake fires (PEFs) [139]. The fire spread processes originating from other structures are first simulated using a physics-based fire spread analysis. Then, other optimization objectives are selected to reflect the decision maker's attitudes toward the two fire risks. A non-dominated sorting genetic algorithm is adopted to obtain the Pareto-optimal solutions, i.e., the locations of fire stations corresponding to the minimum average burned loss for daily fire and the minimum probability of exceeding an acceptable fire loss from PEF. The approach was applied to an ancient town in Southwest China for illustration. The proposed method can reduce the fire loss by 5% on average compared with the traditional max covering location method, and the impacts of uncertainties in the estimate of time for the fire brigade to arrive and of the change of unacceptable fire loss on the optimal locations of fire stations are discussed [139]. The necessity of tailored fire suppression strategies for different areas within timber structures is underlined. The choice between water mist and foam systems should consider the structure's specific regions and functions, with foam systems potentially more suitable for storage areas and water mist systems for public spaces. Regular maintenance and checks are crucial to ensure these systems' effectiveness during emergencies.

The comparative analysis of these studies sheds light on the diverse range of fire suppression systems and emergency response strategies suitable for timber structures. It underscores the need for careful consideration of each structure's specific characteristics and requirements, as well as the importance of integrating various systems to ensure comprehensive fire safety.

5. Challenges and Outlook in the Fire Safety of Timber Structures

Many countries still have restrictions regarding fire regulations, especially for taller timber structures [105]. The main issues are how high structures with load-bearing timber frames may be built and how much visible timber may be used inside and outside on facades [105]. However, as high-rise timber constructions become more prevalent, the focus on their fire safety has intensified. In addition, safeguarding the integrity of ancient timber structures remains crucial. Nevertheless, devising fire mitigation strategies for modern timber structures and ancient structure complexes presents a formidable technical problem. The inherent characteristics of timber imply that traditional fire prevention measures might not always be apt, leading to a demand for innovative fire-resistant materials and techniques. Hybrid construction methods, such as the integration of timber with concrete or steel, as well as cutting-edge flame-retardant materials, which leverage nanotechnology and bio-based flame-retardants, have been proposed to enhance fire safety [50].

While the fire behavior of timber and timber structures is extensively studied, the inherent flammability of timber introduces complex fire dynamics. Rapid flame spread, particularly in high-rise timber buildings, and the emission of toxic smoke and gases during combustion significantly challenge fire suppression and evacuation strategies. The fire-resistance rating of timber structures' walls, floors, and compartmentalized spaces differs markedly from that of reinforced concrete buildings. Consequently, additional

full-scale burning experiments are crucial to assess the effectiveness of preventive measures in timber structures under various fire conditions, enhancing their safety. Furthermore, the combustion properties of engineered timber products, like LVL, LSL, and CLT, require more comprehensive study.

Interdisciplinary approaches bring new insights: material science explores fire-resistant timber options, psychology aids in understanding human behavior and risk perception in fires, and data science leverages big data and machine learning to improve fire predictions and responses. Evacuation in high-rise timber structures poses unique challenges, necessitating vertical evacuation strategies. Real-time intelligent evacuation systems present promising avenues but must be balanced with heritage preservation. Advanced sensor technologies, like infrared sensors and gas detectors, have bolstered early fire detection. However, customizing these systems to specific timber structures is essential, ensuring comprehensive monitoring and prompt response. Thus, optimizing emergency responses in timber structure fires remains a significant task.

The fire safety of timber structures is likely to benefit from a synthesis of advanced materials science, sensor technology, and data analysis techniques. The development of new, eco-friendly fire-retardant materials and treatments remains a priority. Integrating these technological innovations with traditional fire safety measures is key to formulating holistic, effective fire safety solutions for timber structures.

6. Conclusions

Timber structures have gained considerable attention due to the adoption of sustainable architectural practices, but they also pose challenges in terms of fire safety. Key considerations include selecting appropriate materials, applying flame-retardant treatments, and designing fire safety elements for structural components, like beams, columns, and connections. These measures are critical for maintaining structural integrity and fire safety in timber structures.

The employment of modern sensor technologies, such as infrared thermal and smoke detectors, is fundamental in devising effective fire detection strategies. The integration of data science, especially through machine learning and deep learning methods, has markedly improved sensor data analysis, enhancing fire prediction and early warning systems.

Moreover, fire evacuation is not merely a logistical issue. It involves a complex interplay of human behavior, psychological aspects, and advanced technologies for smart navigation and effective communication. This comprehensive approach is essential for ensuring safe and efficient evacuation from timber structures during fires.

This review underscores the ongoing need for research into innovative flame-retardant materials and cutting-edge fire simulation techniques. It also emphasizes the importance of interdisciplinary collaboration, combining expertise from materials science, psychology, and data science to develop new fire safety strategies for timber structures. These insights are invaluable to engineers, architects, and researchers, highlighting the necessity of collaborative efforts in addressing these challenges.

Author Contributions: Conceptualization, X.Z.; Formal analysis, D.W., W.Z., H.B., X.P. and X.Z.; Investigation, R.S., W.L. and X.Z.; Methodology, R.S. and X.Z.; Project administration, R.S.; Software, H.B. and W.L.; Supervision, R.S.; Validation, X.Z., X.P. and W.L.; Visualization, W.L.; Writing—original draft, X.Z., D.W., W.L. and H.B.; Writing—review and editing, H.B. and X.Z. All authors have read and agreed to the published version of the manuscript.

Funding: This research was funded by the National Natural Science Foundation of China, grant number 52004134.

Institutional Review Board Statement: Not applicable.

Informed Consent Statement: Not applicable.

Data Availability Statement: Not applicable.

Conflicts of Interest: The authors declare no conflict of interest.

Abbreviations

Cross-Laminated Timber	CLT
Laminated Veneer Lumber	LVL
Laminated Strand Lumber	LSL
Layer-by-layer	LbL
Flame-retardant	FR
FR1coated timber	W-FR1
Ammonium dihydrogen phosphate	ADP
Metal carbide/carbonitride	Mxene
Fire Dynamics Simulator	FDS
Carbon monoxide	CO
Parts per million by volume	ppmv
Distributed feedback	DFB
Wavelength modulation spectroscopy	WMS
Fire propagation-driven dynamic intelligent evacuation	FPDDIE
Virtual reality	VR
Virtual environment	VE
Postearthquake fires	PEF
Computational Fluid Dynamics	CFD
Heat Release Rate	HRR
Hydrogen cyanide	HCN

References

1. Zhou, H.J.; Huang, J. Analysis of the Differences between Chinese and Japanese Traditional Wooden Architecture. *IOP Conf. Ser. Earth Environ. Sci.* **2020**, *510*, 052017. [CrossRef]
2. Liu, W.; Yang, H. Research progress on modern timber structures. *J. Build. Struct.* **2019**, *40*, 16–43. [CrossRef]
3. Kidder, J.E., Jr. Busshari and fukuzō: Buddhist relics and hidden repositories of Hōryū-ji. *Jpn. J. Relig. Stud.* **1992**, *19*, 217–244. [CrossRef]
4. Pramreiter, M.; Nenning, T.; Malzl, L.; Konnerth, J. A plea for the efficient use of wood in construction. *Nat. Rev. Mater.* **2023**, *8*, 217–218. [CrossRef]
5. Gales, J.; McNamee, R. Fire research for timber structures. *Fire Mater.* **2023**, *47*, 413–414. [CrossRef]
6. Lehtonen, J.; Ilgın, H.E.; Karjalainen, M. Log Construction Practices and Future Outlook: Perspectives of Finnish Experts. *Forests* **2022**, *13*, 1741. [CrossRef]
7. Švajlenka, J.; Kozlovská, M. Perception of User Criteria in the Context of Sustainability of Modern Methods of Construction Based on Wood. *Sustainability* **2018**, *10*, 116. [CrossRef]
8. Wang, S.; Huang, X.; Li, K. A Review of Fire Research on Wood Materials: Research Advances and Prospects. *J. Eng. Thermophys.* **2021**, *42*, 2700–2719.
9. Winkless, L. Novel fire-retardant treatment for wood. *Mater. Today* **2023**, *68*, 10–11. [CrossRef]
10. Zheng, A.; Garis, L.; Pike, I. Fire Severity Outcome Comparison of Apartment Buildings Constructed from Combustible and Non-Combustible Construction Materials. *Fire Technol.* **2022**, *58*, 1815–1825. [CrossRef]
11. Ball, P. The huge scientific effort to study Notre-Dame's ashes. *Nature* **2020**, *577*, 153–154. [CrossRef] [PubMed]
12. Chen, J.; Ding, L.; Ji, J.; Zhu, J. A Combined Method to Build Bayesian Network for Fire Risk Assessment of Historical Buildings. *Fire Technol.* **2023**, *59*, 3525–3563. [CrossRef]
13. Cheng, C.-H.; Chow, C.-L.; Yue, T.-K.; Ng, Y.-W.; Chow, W.-K. Smoke Hazards of Tall Timber Buildings with New Products. *Encyclopedia* **2022**, *2*, 593–601. [CrossRef]
14. Noaki, M.; Suzuki, J.-i.; Ohmiya, Y.; Delichatsios, M.A. Fire behavior in compartment containing timber constructions focusing on pressure increase owing to pyrolysis gas. *Fire Saf. J.* **2023**, *143*, 104018. [CrossRef]
15. Kolibaba, T.J.; Brehm, J.T.; Grunlan, J.C. Renewable nanobrick wall coatings for fire protection of wood. *Green Mater.* **2020**, *8*, 131–138. [CrossRef]
16. Frangi, A.; Fontana, M.; Knobloch, M. Fire Design Concepts for Tall Timber Buildings. *Struct. Eng. Int.* **2008**, *18*, 148–155. [CrossRef]
17. Zhang, Y.; Wang, L. Research on Flashover Prediction Method of Large-Space Timber Structures in a Fire. *Materials* **2021**, *14*, 5515. [CrossRef] [PubMed]
18. Lei, Y.; Shen, Z.; Tian, F.; Yang, X.; Wang, F.; Pan, R.; Wang, H.; Jiao, S.; Kou, W. Fire risk level prediction of timber heritage buildings based on entropy and XGBoost. *J. Cult. Herit.* **2023**, *63*, 11–22. [CrossRef]
19. Log, T. Consumer Grade Weather Stations for Wooden Structure Fire Risk Assessment. *Sensors* **2018**, *18*, 3244. [CrossRef]

20. Wang, H.; Wu, F.; Pan, X.H.; Hua, M.; Yu, H.; Zang, X.W.; Jiang, J.C. Spray and explosion characteristics of methanol and methanol-benzene blends near azeotrope formation: Effects of temperature, concentration, and benzene content. *J. Loss Prev. Process Ind.* **2023**, *83*, 105079. [CrossRef]
21. Wu, F.; Yu, H.; Pan, X.H.; Zang, X.W.; Hua, M.; Wang, H.; Jiang, J.C. Experimental study of methanol atomization and spray explosion characteristic under negative pressure. *Process Saf. Environ. Prot.* **2022**, *161*, 162–174. [CrossRef]
22. Zhang, F.; Shi, L.; Liu, S.; Shi, J.; Zhang, J. CFD-based framework for fire risk assessment of contiguous wood-frame villages in the western Hunan region. *J. Build. Eng.* **2022**, *54*, 104607. [CrossRef]
23. Konopka, D.; Gebhardt, C.; Kaliske, M. Numerical modelling of wooden structures. *J. Cult. Herit.* **2017**, *27*, S93–S102. [CrossRef]
24. Weinschenk, C.G.; Overholt, K.J.; Madrzykowski, D. Simulation of an Attic Fire in a Wood Frame Residential Structure, Chicago, IL. *Fire Technol.* **2016**, *52*, 1629–1658. [CrossRef]
25. Tung, S.-F.; Su, H.-C.; Tzeng, C.-T.; Lai, C.-M. Experimental and Numerical Investigation of a Room Fire in a Wooden-Frame Historical Building. *Int. J. Archit. Herit.* **2020**, *14*, 106–118. [CrossRef]
26. Bartlett, A.I.; Hadden, R.M.; Bisby, L.A. A Review of Factors Affecting the Burning Behaviour of Wood for Application to Tall Timber Construction. *Fire Technol.* **2019**, *55*, 1–49. [CrossRef]
27. Maraveas, C.; Miamis, K.; Matthaiou, C.E. Performance of Timber Connections Exposed to Fire: A Review. *Fire Technol.* **2015**, *51*, 1401–1432. [CrossRef]
28. Mensah, R.A.; Jiang, L.; Renner, J.S.; Xu, Q. Characterisation of the fire behaviour of wood: From pyrolysis to fire retardant mechanisms. *J. Therm. Anal. Calorim.* **2023**, *148*, 1407–1422. [CrossRef]
29. Institute for the History of Natural Sciences, Chinese Academy of Sciences. *History and Development of Ancient Chinese Architecture*; Science Press: Beijing, China, 2000; p. 73.
30. Kletz, T.A. What You Don't Have, Can't leak. *Chem. Ind.* **1978**, 287–292.
31. Amyotte, P.R.; Khan, F.I. The role of inherently safer design in process safety. *Can. J. Chem. Eng.* **2021**, *99*, 853–871. [CrossRef]
32. Wang, H.-Y.; Tian, Y.; Zhang, L. Experimental study of the characteristic parameters of the combustion of the wood of ancient buildings. *J. Fire Sci.* **2019**, *37*, 117–136. [CrossRef]
33. Duriot, R.; Rescalvo, F.J.; Pot, G.; Denaud, L.; Girardon, S.; Frayssinhes, R. An insight into mechanical properties of heartwood and sapwood of large French Douglas-fir LVL. *Constr. Build. Mater.* **2021**, *299*, 123859. [CrossRef]
34. Moradpour, P.; Pirayesh, H.; Gerami, M.; Jouybari, I.R. Laminated strand lumber (LSL) reinforced by GFRP; mechanical and physical properties. *Constr. Build. Mater.* **2018**, *158*, 236–242. [CrossRef]
35. Brandner, R.; Flatscher, G.; Ringhofer, A.; Schickhofer, G.; Thiel, A. Cross laminated timber (CLT): Overview and development. *Eur. J. Wood Wood Prod.* **2016**, *74*, 331–351. [CrossRef]
36. Lee, J.-H.; Park, J.-W.; Kim, H.; Jang, S.-W.; Kim, H.-J.; Choi, Y. Thermal property and flame retardancy comparisons based on particle size and size distribution of clays in ethylene vinyl acetate (EVA) adhesive sheets for cross-laminated timber (CLT). *Eur. J. Wood Wood Prod.* **2020**, *78*, 93–105. [CrossRef]
37. Gan, W.T.; Chen, C.J.; Wang, Z.Y.; Song, J.W.; Kuang, Y.D.; He, S.M.; Mi, R.Y.; Sunderland, P.B.; Hu, L.B. Dense, Self-Formed Char Layer Enables a Fire-Retardant Wood Structural Material. *Adv. Funct. Mater.* **2019**, *29*, 1807444. [CrossRef]
38. Jung, K.; Kitamori, A.; Komatsu, K. Development of a joint system using a compressed wooden fastener I: Evaluation of pull-out and rotation performance for a column—Sill joint. *J. Wood Sci.* **2009**, *55*, 273–282. [CrossRef]
39. Jung, K.; Kitamori, A.; Komatsu, K. Development of a joint system using a compressed wooden fastener II: Evaluation of rotation performance for a column-beam joint. *J. Wood Sci.* **2010**, *56*, 118–126. [CrossRef]
40. Jung, K.; Murakami, S.; Kitamori, A.; Chang, W.-S.; Komatsu, K. Improvement of glued-in-rod joint system using compressed wooden dowel. *Holzforschung* **2010**, *64*, 799–804. [CrossRef]
41. Wang, H.; Chen, X.; Tian, Y.; Gao, Y.; Fan, C.; Liu, Z.; Nong, C. Study on the thermodynamic characteristics of wood combustion in historical buildings. *J. Cult. Herit.* **2023**, *63*, 32–41. [CrossRef]
42. Wang, X.; Wang, J.; Wang, J.; Sheng, G. Experimental and Numerical Simulation Analyses of Flame Spread Behaviour over Wood Treated with Flame Retardant in Ancient Buildings of Fuling Mausoleum, China. In *Fire Technology*; Springer: Berlin/Heidelberg, Germany, 2022. [CrossRef]
43. Walsh-Korb, Z.; Avérous, L. Recent developments in the conservation of materials properties of historical wood. *Prog. Mater. Sci.* **2019**, *102*, 167–221. [CrossRef]
44. Mačiulaitis, R.; Jefimovas, A.; Zdanevičius, P. Research of natural wood combustion and charring processes. *J. Civ. Eng. Manag.* **2012**, *18*, 631–641. [CrossRef]
45. Etiegni, L.; Campbell, A.G. Physical and chemical characteristics of wood ash. *Bioresour. Technol.* **1991**, *37*, 173–178. [CrossRef]
46. Lachowicz, H.; Wróblewska, H.; Sajdak, M.; Komorowicz, M.; Wojtan, R. The chemical composition of silver birch (*Betula pendula* Roth.) wood in Poland depending on forest stand location and forest habitat type. *Cellulose* **2019**, *26*, 3047–3067. [CrossRef]
47. Vedernikov, D.N.; Leontyev, L.L.; Morskoy-Lemeshko, P.D.; Eltsova, L.S. Chemical Composition and Mechanical Properties of Various Parts of Birch Wood. *Chem. Plant Raw Mater.* **2022**, *4*, 127–132. [CrossRef]
48. Haurie, L.; Giraldo, M.P.; Lacasta, A.M.; Montón, J.; Sonnier, R. Influence of different parameters in the fire behaviour of seven hardwood species. *Fire Saf. J.* **2019**, *107*, 193–201. [CrossRef]
49. Hugi, E.; Weber, R. Fire Behaviour of Tropical and European Wood and Fire Resistance of Fire Doors Made of this Wood. *Fire Technol.* **2012**, *48*, 679–698. [CrossRef]

50. El-Houjeyri, I.; Thi, V.-D.; Oudjene, M.; Khelifa, M.; Rogaume, Y.; Sotayo, A.; Guan, Z. Experimental investigations on adhesive free laminated oak timber beams and timber-to-timber joints assembled using thermo-mechanically compressed wood dowels. *Constr. Build. Mater.* **2019**, *222*, 288–299. [CrossRef]
51. Zhang, Z.; Ding, P.; Wang, S.; Huang, X. Smouldering-to-flaming transition on wood induced by glowing char cracks and cross wind. *Fuel* **2023**, *352*, 129091. [CrossRef]
52. Li, J.; Ji, J.; Zhang, Y.; Sun, J. Characteristics of flame spread over the surface of charring solid combustibles at high altitude. *Sci. Bull.* **2009**, *54*, 1957–1962. [CrossRef]
53. Fredlund, B. Modelling of heat and mass transfer in wood structures during fire. *Fire Saf. J.* **1993**, *20*, 39–69. [CrossRef]
54. Lin, S.; Qin, Y.; Huang, X.; Gollner, M. Use of pre-charred surfaces to improve fire performance of wood. *Fire Saf. J.* **2023**, *136*, 103745. [CrossRef]
55. Liang, Z.; Lin, S.; Huang, X. Smoldering ignition and emission dynamics of wood under low irradiation. *Fire Mater.* **2022**, *47*, 514–524. [CrossRef]
56. Mitchell, H.; Amin, R.; Heidari, M.; Kotsovinos, P.; Rein, G. Structural hazards of smouldering fires in timber buildings. *Fire Saf. J.* **2023**, *140*, 103861. [CrossRef]
57. Lin, S.; Huang, X.; Gao, J.; Ji, J. Extinction of Wood Fire: A Near-Limit Blue Flame Above Hot Smoldering Surface. *Fire Technol.* **2021**, *58*, 415–434. [CrossRef]
58. Richter, F.; Jervis, F.X.; Huang, X.; Rein, G. Effect of oxygen on the burning rate of wood. *Combust. Flame* **2021**, *234*, 111591. [CrossRef]
59. Du, W.; Zhang, Z.; Li, P.; Li, L.; Huang, H.; Yan, M. Effect of phosphorus/nitrogen/carbon component ratio in aqueous flame retardant on the fire prevention of wood substrate. *J. Appl. Polym. Sci.* **2023**, *140*, 1–9. [CrossRef]
60. Bevington, C.; Williams, A.J.; Guider, C.; Baker, N.C.; Meyer, B.; Babich, M.A.; Robinson, S.; Jones, A.; Phillips, K.A. Development of a Flame Retardant and an Organohalogen Flame Retardant Chemical Inventory. *Sci. Data* **2022**, *9*, 295. [CrossRef]
61. Kolibaba, T.J.; Vest, N.A.; Grunlan, J.C. Polyelectrolyte photopolymer complexes for flame retardant wood. *Mater. Chem. Front.* **2022**, *6*, 1630–1636. [CrossRef]
62. Lainioti, G.C.; Koukoumtzis, V.; Andrikopoulos, K.S.; Tsantaridis, L.; Östman, B.; Voyiatzis, G.A.; Kallitsis, J.K. Environmentally Friendly Hybrid Organic–Inorganic Halogen-Free Coatings for Wood Fire-Retardant Applications. *Polymers* **2022**, *14*, 4959. [CrossRef]
63. Fan, C.; Gao, Y.; Li, Y.; Yan, L.; Zhu, D.; Guo, S.; Ou, C.; Wang, Z. A flame-retardant densified wood as robust and fire-safe structural material. *Wood Sci. Technol.* **2023**, *57*, 111–134. [CrossRef]
64. Lu, J.; Jiang, P.; Chen, Z.; Li, L.; Huang, Y. Flame retardancy, thermal stability, and hygroscopicity of wood materials modified with melamine and amino trimethylene phosphonic acid. *Constr. Build. Mater.* **2021**, *267*, 121042. [CrossRef]
65. Yi, L.; Yang, Q.; Yan, L.; Wang, N. A facile strategy to construct ZnO nanoparticles reinforced transparent fire-retardant coatings for achieving antibacterial activity and long-term fire protection of wood substrates. *J. Build. Eng.* **2023**, *72*, 106630. [CrossRef]
66. Hansen-Bruhn, I.; Hull, T.R. Flammability and burning behaviour of fire protected timber. *Fire Saf. J.* **2023**, *140*, 103918. [CrossRef]
67. Lin, C.-f.; Kim, I.; Mantanis, G.I.; Karlsson, O.; Jones, D.; Sandberg, D. Leach-resistant fire-retardant treated furfurylated wood by incorporating guanyl-urea phosphate. *Wood Mater. Sci. Eng.* **2021**, *16*, 429–431. [CrossRef]
68. Žajdlík, T.; Šuhajda, K.; Průša, D. Medium-Scale Fire Resistance Testing of Timber Structures with Composite Cement Fibre Materials. *Buildings* **2023**, *13*, 527. [CrossRef]
69. Said, M.S.M.; Tohir, M.Z.M. The effect of ultraviolet coating on containment and fire hazards of phase change materials impregnated wood structure. *J. Energy Storage* **2020**, *32*, 101727. [CrossRef]
70. Lai, Y.; Liu, X.; Li, Y.; Leonidas, E.; Fisk, C.; Yang, J.; Zhang, Y.; Willmott, J. Investigating the fire-retardant efficiency of intumescent coatings on inclined timber: A study on application strategies and heat transfer mechanisms. *Constr. Build. Mater.* **2023**, *407*, 133586. [CrossRef]
71. Holder, K.M.; Smith, R.J.; Grunlan, J.C. A review of flame retardant nanocoatings prepared using layer-by-layer assembly of polyelectrolytes. *J. Mater. Sci.* **2017**, *52*, 12923–12959. [CrossRef]
72. Qiu, X.; Li, Z.; Li, X.; Zhang, Z. Flame retardant coatings prepared using layer by layer assembly: A review. *Chem. Eng. J.* **2018**, *334*, 108–122. [CrossRef]
73. Zheng, Z.G.; McDonald, J.; Khillan, R.; Su, Y.; Shutava, T.; Grozdits, G.; Lvov, Y.M. Layer-by-layer nanocoating of lignocellulose fibers for enhanced paper properties. *J. Nanosci. Nanotechnol.* **2006**, *6*, 624–632. [CrossRef] [PubMed]
74. Agarwal, M.; Lvov, Y.; Varahramyan, K. Conductive wood microfibres for smart paper through layer-by-layer nanocoating. *Nanotechnology* **2006**, *17*, 5319–5325. [CrossRef]
75. Renneckar, S.; Zhou, Y. Nanoscale Coatings on Wood: Polyelectrolyte Adsorption and Layer-by-Layer Assembled Film Formation. *ACS Appl. Mater. Interfaces* **2009**, *1*, 559–566. [CrossRef] [PubMed]
76. Lu, X.; Hu, Y. Layer-by-layer Deposition of TiO_2 Nanoparticles in the Wood Surface and its Superhydrophobic Performance. *Bioresources* **2016**, *11*, 4605–4620. [CrossRef]
77. Bellanger, H.; Casdorff, K.; Muff, L.F.; Ammann, R.; Burgert, I.; Michen, B. Layer-by-layer deposition on a heterogeneous surface: Effect of sorption kinetics on the growth of polyelectrolyte multilayers. *J. Colloid Interface Sci.* **2017**, *500*, 133–141. [CrossRef]
78. Ge, Y.; Wang, L.; Wang, X.; Wang, H. Surface Treatment of Mongolian Scots Pine Using Phosphate Precipitation for Better Performance of Compressive Strength and Fire Resistance. *Materials* **2023**, *16*, 2711. [CrossRef]

79. Xu, Z.; Zhao, W.; Yan, L.; Tang, X.; Feng, Y.; Wang, Z. Processing of Pinus sylvestris L. into a heat-insulating, thermally stable, and flame-retarded material by combining the flame-retardant impregnation and densification treatment. *Holzforschung* **2023**, *77*, 762–775. [CrossRef]
80. Song, K.; Ganguly, I.; Eastin, I.; Dichiara, A. High temperature and fire behavior of hydrothermally modified wood impregnated with carbon nanomaterials. *J. Hazard Mater.* **2020**, *384*, 121283. [CrossRef]
81. Huang, S.; Wang, L.; Li, Y.; Liang, C.; Zhang, J. Novel Ti3C2Tx MXene/epoxy intumescent fire-retardant coatings for ancient wooden architectures. *J. Appl. Polym. Sci.* **2021**, *138*, 50649. [CrossRef]
82. Jiang, J.; Li, J.; Hu, J.; Fan, D. Effect of nitrogen phosphorus flame retardants on thermal degradation of wood. *Constr. Build. Mater.* **2010**, *24*, 2633–2637. [CrossRef]
83. Fu, Q.L.; Medina, L.; Li, Y.Y.; Carosio, F.; Hajian, A.; Berglund, L.A. Nanostructured Wood Hybrids for Fire-Retardancy Prepared by Clay Impregnation into the Cell Wall. *ACS Appl. Mater. Interfaces* **2017**, *9*, 36154–36163. [CrossRef] [PubMed]
84. Cong, X.Y.; Khalili, P.; Zhu, C.K.; Li, S.H.; Li, J.J.; Rudd, C.; Liu, X.L. Investigation of Fire Protection Performance and Mechanical Properties of Thin-Ply Bio-Epoxy Composites. *Polymers* **2021**, *13*, 731. [CrossRef] [PubMed]
85. Wang, X.; Song, L.; Yang, H.Y.; Lu, H.D.; Hu, Y. Synergistic Effect of Graphene on Antidripping and Fire Resistance of Intumescent Flame Retardant Poly(butylene succinate) Composites. *Ind. Eng. Chem. Res.* **2011**, *50*, 5376–5383. [CrossRef]
86. Engel, T.; Werther, N. Structural Means for Fire-Safe Wooden Façade Design. *Fire Technol.* **2023**, *59*, 117–151. [CrossRef]
87. Wei, S.; Yang, H.; Gao, B.; Cheng, H.; Lu, R.; Dong, L. Experimental research on temperature distribution and charring rate of typical components of wood structure building. *J. Fire Sci.* **2022**, *40*, 134–152. [CrossRef]
88. Ulusoy, S. Optimum design of timber structures under fire using metaheuristic algorithm. *Građevinar* **2022**, *74*, 115–124.
89. Audebert, M.; Dhima, D.; Taazount, M.; Bouchaïr, A. Numerical investigations on the thermo-mechanical behavior of steel-to-timber joints exposed to fire. *Eng. Struct.* **2011**, *33*, 3257–3268. [CrossRef]
90. Audebert, M.; Dhima, D.; Taazount, M.; Bouchaïr, A. Experimental and numerical analysis of timber connections in tension perpendicular to grain in fire. *Fire Saf. J.* **2014**, *63*, 125–137. [CrossRef]
91. Audebert, M.; Dhima, D.; Bouchaïr, A. Proposal for a new formula to predict the fire resistance of timber connections. *Eng. Struct.* **2020**, *204*, 110041. [CrossRef]
92. Piloto, P.A.G.; Vergara, D. Light timber framed wall under fire: Effect of the load and cladding. *Eng. Struct.* **2023**, *280*, 115696. [CrossRef]
93. Qin, R.; Zhou, A.; Chow, C.L.; Lau, D. Structural performance and charring of loaded wood under fire. *Eng. Struct.* **2021**, *228*, 111491. [CrossRef]
94. Racher, P.; Laplanche, K.; Dhima, D.; Bouchaïr, A. Thermo-mechanical analysis of the fire performance of dowelled timber connection. *Eng. Struct.* **2010**, *32*, 1148–1157. [CrossRef]
95. Hopkin, D.J. Predicting the thermal response of timber structures in natural fires using computational 'heat of hydration' principles. *Fire Mater.* **2013**, *37*, 311–327. [CrossRef]
96. Shi, Z.; Marshall, R. Laminated gypsum wallboard in mid-rise wood construction. *J. Acoust. Soc. Am.* **2017**, *141*, 3538–3539. [CrossRef]
97. Hakkarainen, T. Post-Flashover Fires in Light and Heavy Timber Construction Compartments. *J. Fire Sci.* **2002**, *20*, 133–175. [CrossRef]
98. *GB50005-2017*; Standard for Design of Timber Structures. Ministry of Housing and Urban-Rural Development of the People's Republic of China. General Administration of Quality Supervision, Inspection and Quarantine: Beijing, China, 2017.
99. *ISO 834-6*; Fire-Resistance Tests—Elements of Building Construction—Part 6: Specific Requirements for Beams. International Organization for Standardization: Geneva, Switzerland, 2000.
100. *ISO 834-7*; Fire-Resistance Tests—Elements of Building Construction—Part 7: Specific Requirements for Columns. International Organization for Standardization: Geneva, Switzerland, 2000.
101. Laplanche, K. Etude du Comportement au Feu des Assemblages de Structures Bois: Approche Expérimentale et Modélisation. Ph.D. Thesis, Université Blaise Pascal Clermont-Ferrand et CSTB, Clermont-Ferrand, France, 2006; 140p.
102. Song, X.B.; Zhang, Y.; Lu, Y.; Peng, Y.Q.; Zhou, H.Z. Experimental study on fire resistance of traditional timber mortise-tenon joints with damages. *Fire Saf. J.* **2023**, *138*, 103780. [CrossRef]
103. Hoehler, M.S.; Su, J.; Lafrance, P.S.; Bundy, M.F.; Kimball, A.; Brandon, D.; Östman, B. Fire safety challenges of tall wood buildings: Large-scale cross laminated timber compartments fire tests. In Proceedings of the SiF 2018—The 10th International Conference on Structures in Fire, FireSERT, Belfast, UK, 6–8 June 2018.
104. Su, J.Z.; Lougheed, G.D. *Report to Research Consortium for Wood and Wood Hybrid Mid-Rise Buildings—Fire Safety Summary*; Report: A1-004377.1; Nation Research Council: Ottawa, ON, Canada, 2014.
105. Östman, B. National fire regulations for the use of wood in buildings—worldwide review 2020. *Wood Mater. Sci. Eng.* **2022**, *17*, 2–5. [CrossRef]
106. Hu, H.; Shi, J.; Qi, Z.; Li, H.; Huang, X.; Ji, J. Flammability and flame spread behavior of common fuels in Chinese historical buildings: An experimental research. *Combust. Sci. Technol.* **2022**, *195*, 3947–3964. [CrossRef]
107. Yuan, S.; Xiang, K.; Yan, F.; Liu, Q.; Sun, X.; Li, Y.; Du, P. Characteristics and Mechanism of Fire Spread between Full-Scale Wooden Houses from Internal Fires. *Buildings* **2022**, *12*, 575. [CrossRef]

108. Huai, C.; Xie, J.; Liu, F.; Du, J.; Chow, D.H.C.; Liu, J. Experimental and Numerical Analysis of Fire Risk in Historic Chinese Temples: A Case in Beijing. *Int. J. Archit. Herit.* **2021**, *16*, 1844–1858. [CrossRef]
109. Shi, C.L.; Zhong, M.H.; Fu, T.R.; He, L.; Huo, R. An investigation on spill plume temperature of large space building fires. *J. Loss Prev. Process Ind.* **2009**, *22*, 76–85. [CrossRef]
110. Hayajneh, S.M.; Naser, J. Fire Spread in Multi-Storey Timber Building, a CFD Study. *Fluids* **2023**, *8*, 140. [CrossRef]
111. Hansen-Bruhn, I.; Hull, T.R. Smoke toxicity of fire protecting timber treatments. *Fire Saf. J.* **2023**, *141*, 103977. [CrossRef]
112. Karpovič, Z.; Šukys, R.; Gudelis, R. Toxicity research of smouldering and flaming pine timber treated with fire retardant solutions. *J. Civ. Eng. Manag.* **2012**, *18*, 600–608. [CrossRef]
113. Nan, Z.; Khan, A.A.; Zhang, X.; Jiang, L.; Huang, X.; Usmani, A. Fire spread and burning dynamics of non-uniform wood crib for evolved design fire scenarios. *Fire Saf. J.* **2023**, *140*, 103840. [CrossRef]
114. Fonollosa, J.; Solorzano, A.; Marco, S. Chemical Sensor Systems and Associated Algorithms for Fire Detection: A Review. *Sensors* **2018**, *18*, 553. [CrossRef] [PubMed]
115. Khan, F.; Xu, Z.; Sun, J.; Khan, F.M.; Ahmed, A.; Zhao, Y. Recent Advances in Sensors for Fire Detection. *Sensors* **2022**, *22*, 3310. [CrossRef]
116. Lv, L.-Y.; Cao, C.-F.; Qu, Y.-X.; Zhang, G.-D.; Zhao, L.; Cao, K.; Song, P.; Tang, L.-C. Smart fire-warning materials and sensors: Design principle, performances, and applications. *Mater. Sci. Eng. R Rep.* **2022**, *150*, 100690. [CrossRef]
117. Xiao, G.; Weng, H.; Ge, L.; Huang, Q. Application Status of Carbon Nanotubes in Fire Detection Sensors. *Front. Mater.* **2020**, *7*, 588521. [CrossRef]
118. Pannek, C.; Vetter, T.; Oppmann, M.; Weber, C.; Eberhardt, A.; Dold, M.; Bauersfeld, M.L.; Henfling, M.; Trupp, S.; Schug, B.; et al. Highly sensitive reflection based colorimetric gas sensor to detect CO in realistic fire scenarios. *Sens. Actuators B Chem.* **2020**, *306*, 127572. [CrossRef]
119. Dang, J.; Yu, H.; Zheng, C.; Wang, Y.; Sun, Y. An early fire sensor based on infrared gas analytical methods. *Anal. Methods* **2018**, *10*, 3325–3331. [CrossRef]
120. Lee, C.; Yang, H. A system to detect potential fires using a thermographic camera. *Nat. Hazards* **2018**, *92*, 511–523. [CrossRef]
121. Log, T. Modeling Indoor Relative Humidity and Wood Moisture Content as a Proxy for Wooden Home Fire Risk. *Sensors* **2019**, *19*, 5050. [CrossRef] [PubMed]
122. Ibrahim, M.N.; Abdul-Hamid, K.; Ibrahim, M.S.; Mohd-Din, A.; Yunus, R.M.; Yahya, M.R. The development of fire risk assessment method for heritage building. In Proceedings of the 2nd International Building Control Conference, IBCC 2011, Penang, Malaysia, 11–12 July 2011; pp. 317–324.
123. Ibrahim, M.N.; Ibrahim, M.S.; Mohd-Din, A.; Abdul-Hamid, K.; Yunus, R.M.; Yahya, M.R. Fire risk assessment of heritage building—Perspectives of regulatory authority, restorer and building stakeholder. In Proceedings of the 2nd International Building Control Conference, IBCC 2011, Penang, Malaysia, 11–12 July 2011; pp. 325–328.
124. Yuan, C.Y.; He, Y.P.; Feng, Y.B.; Wang, P.F. Fire hazards in heritage villages: A case study on Dangjia Village in China. *Int. J. Disaster Risk Reduct.* **2018**, *28*, 748–757. [CrossRef]
125. Ma, S.Y.; Chun, Q.; Zhang, C.W.; Yang, L.; Qian, Y.C.; Cao, G.; Dong, Q.C. Quantitative Evaluation Method for the Structural Safety Status of Traditional Courtyard-Style Timber Buildings. *Int. J. Archit. Herit.* **2023**. [CrossRef]
126. Zang, X.; Zhou, X.; Bian, H.; Jin, W.; Pan, X.; Jiang, J.; Koroleva, M.Y.; Shen, R. Prediction and Construction of Energetic Materials Based on Machine Learning Methods. *Molecules* **2023**, *28*, 322. [CrossRef]
127. Bian, H.; Zhu, Z.; Zang, X.; Luo, X.; Jiang, M. A CNN Based Anomaly Detection Network for Utility Tunnel Fire Protection. *Fire* **2022**, *5*, 212. [CrossRef]
128. Ran, H.; Sun, L.; Gao, X. Influences of intelligent evacuation guidance system on crowd evacuation in building fire. *Autom. Constr.* **2014**, *41*, 78–82. [CrossRef]
129. Mirahadi, F.; McCabe, B.Y. EvacuSafe: A real-time model for building evacuation based on Dijkstra's algorithm. *J. Build. Eng.* **2021**, *34*, 101687. [CrossRef]
130. Mu, H.; Lo, S.; Song, W.; Wang, J.; Sun, J. An Experimental and Numerical Study of Imbalanced Door Choice During an Announced Evacuation Drill. *Fire Technol.* **2015**, *52*, 801–815. [CrossRef]
131. Li, N.; Huang, G.; Jiang, H.; Gao, X.; Zhou, L. Fire propagation-driven dynamic intelligent evacuation model in multifloor hybrid buildings. *Adv. Eng. Inform.* **2023**, *57*, 102097. [CrossRef]
132. Balboa, A.; González-Villa, J.; Cuesta, A.; Abreu, O.; Alvear, D. Testing a real-time intelligent evacuation guiding system for complex buildings. *Saf. Sci.* **2020**, *132*, 104970. [CrossRef]
133. D'Orazio, M.; Bernardini, G.; Tacconi, S.; Arteconi, V.; Quagliarini, E. Fire safety in Italian-style historical theatres: How photoluminescent wayfinding can improve occupants' evacuation with no architecture modifications. *J. Cult. Herit.* **2016**, *19*, 492–501. [CrossRef]
134. Bourhim, E.L.M.; Cherkaoui, A. Efficacy of Virtual Reality for Studying People's Pre-evacuation Behavior under Fire. *Int. J. Hum. Comput. Stud.* **2020**, *142*, 102484. [CrossRef]
135. Xiaomeng, Z.; Biao, Z.; Xiang, J. Study of fire-extinguishing performance of portable water-mist fire extinguisher in historical buildings. *J. Cult. Herit.* **2010**, *11*, 392–397. [CrossRef]
136. Ko, Y.J.; Elsagan, N. Investigation of the performance of fire suppression systems in protection of mass timber residential buildings. *Indoor Built Environ.* **2023**, *32*, 230–241. [CrossRef]

137. Rappsilber, T.; Below, P.; Krüger, S. Wood crib fire tests to evaluate the influence of extinguishing media and jet type on extinguishing performance at close range. *Fire Saf. J.* **2019**, *106*, 136–145. [CrossRef]
138. Wang, X.; Liao, Y.; Lin, L. Experimental study on fire extinguishing with a newly prepared multi-component compressed air foam. *Sci. Bull.* **2009**, *54*, 492–496. [CrossRef]
139. Hou, G.; Li, Q.; Song, Z.; Zhang, H. Optimal fire station locations for historic wood building areas considering individual fire spread patterns and different fire risks. *Case Stud. Therm. Eng.* **2021**, *28*, 101548. [CrossRef]

Disclaimer/Publisher's Note: The statements, opinions and data contained in all publications are solely those of the individual author(s) and contributor(s) and not of MDPI and/or the editor(s). MDPI and/or the editor(s) disclaim responsibility for any injury to people or property resulting from any ideas, methods, instructions or products referred to in the content.