ceramics

MDPI

Article

Life Cycle Assessment of Industrial Glass Cullet Recycling Process Based on Alkaline Activation

Elena Battiston [1], Francesco Carollo [2], Giulia Tameni [2], Enrico Bernardo [2] and Anna Mazzi [1,*]

[1] SAM.lab (Sustainability Assessment and Management Laboratory), Department of Industrial Engineering, University of Padova, 35131 Padova, Italy; elena.battiston@phd.unipd.it
[2] CERAM Glass (Advanced Ceramic and Glass Manufacturing), Department of Industrial Engineering, University of Padova, 35131 Padova, Italy; francesco.carollo@unipd.it (F.C.); giulia.tameni@phd.unipd.it (G.T.); enrico.bernardo@unipd.it (E.B.)
* Correspondence: anna.mazzi@unipd.it; Tel.: +39-049-8271611

Abstract

To mitigate the issue of accumulating glass waste, an advanced process has been developed for the production of glass foams via alkaline activation, employing industrial glass cullet as the primary raw material. This method contributes to circular economy strategies by enabling high-value upcycling of secondary raw materials. The aim of the study is to conduct an environmental assessment of this recycling process using the Life Cycle Assessment (LCA). The analysis is performed with SimaPro software, adopting the ReCiPe impact assessment method, which allows for the quantification of 18 impact categories. Four distinct foaming processes were compared to determine the most environmentally preferable option and a sensitivity analysis was conducted to assess how variations in energy sources influence the environmental performance. The findings indicate that the scenario involving hardening at 40 °C for seven days results in the highest environmental burdens. Specifically, in the Human Carcinogenic Toxicity category, the normalized impacts for this process are approximately an order of magnitude greater. Electricity consumption is identified as the primary contributor to the overall impact. The sensitivity analysis underscores that utilizing photovoltaic panels reduces impacts. Future developments will focus on expanding the system boundaries to provide a more comprehensive understanding and supporting informed decision-making.

Keywords: life cycle assessment; industrial glass waste; sustainability; alkaline activation; glass foams

check for updates

Academic Editors: Gilbert Fantozzi and Anna Lukowiak

Received: 17 June 2025
Revised: 30 July 2025
Accepted: 24 August 2025
Published: 29 August 2025

Citation: Battiston, E.; Carollo, F.; Tameni, G.; Bernardo, E.; Mazzi, A. Life Cycle Assessment of Industrial Glass Cullet Recycling Process Based on Alkaline Activation. *Ceramics* **2025**, *8*, 109. https://doi.org/10.3390/ceramics8030109

Copyright: © 2025 by the authors. Licensee MDPI, Basel, Switzerland. This article is an open access article distributed under the terms and conditions of the Creative Commons Attribution (CC BY) license (https://creativecommons.org/licenses/by/4.0/).

1. Introduction

Recycling glass from segregated urban waste is highly beneficial, as it leads to substantial reductions in raw material usage and energy consumption during the melting process (with pre-formed glass facilitating the reaction of mineral materials) [1]. However, "ideal" recycling, where glass cullet is fully reused in the production of the same glass products (referred to as "closed-loop recycling"), is not practically achievable with discarded fractions landfilled up to an amount of 200 million tons/year worldwide [2,3].

A central issue in glass recycling lies in maintaining the quality of the final recycled product. The effectiveness of recycled glass depends largely on the purity of the cullet [4,5]. Crushed glass from municipal waste collection often requires an expensive and complex sorting process to separate pieces by color and remove impurities such as metal, plastic, or ceramics before it can be used as a viable alternative to raw minerals. Glass fractions

containing these impurities are typically diverted to landfills [6,7]. In some cases, even glass with minimal contamination may be discarded, especially when original glass products are no longer being manufactured, as seen with glass from dismantled cathode ray tubes (such as those from outdated TV and computer screens) [8–10].

Further complexity arises in recycling specialized glass compositions such as boro-alumino-silicate or borosilicate glass used in pharmaceutical containers. These products are typically formed through precise thermo-mechanical processes and are not easily reintegrated into standard glass production streams [11]. For decades, the pharmaceutical industry has relied on borosilicate glass vials due to their exceptional chemical stability and, in principle, infinite recyclability [12–14]. However, these glasses are synthesized from high-purity raw materials and shaped into preforms (e.g., tubes, rods) in specialized facilities [15], making closed-loop recycling practically unfeasible. These challenges have driven interest in open-loop recycling, where discarded glass is repurposed into different products rather than remelted into the original ones [8]. While not preserving the same material function, open-loop recycling offers important environmental advantages such as reducing landfill volumes and conserving natural resources and can lead to highly sustainable alternatives, especially when revenues from the new products outweigh transformation costs. When this happens, open-loop recycling can be accurately described as upcycling [16].

Glass foams (or cellular glasses) are valued for their unique combination of properties, including high strength-to-density ratios, large surface areas, high permeability, low specific heat, and excellent thermal and acoustic insulation [9,17]. They also boast superior chemical and thermal resistance compared to polymeric foams, making them more suitable for thermal insulation (glass foams are non-flammable and flame-resistant) [18]. The value of these materials can be further enhanced by optimizing the manufacturing process. While the energy-intensive melting process can be avoided by utilizing viscous flow sintering of glass powders at significantly lower temperatures, the cost and environmental impact of foaming agents remain controversial [18,19].

A promising approach to improving glass foams involves separating the foaming and sintering steps, according to gel casting technology [20]. This method can be applied to solutions derived from sol-gel processes, as well as suspensions of glass powders [21]. In this process, air bubbles are incorporated into the mixture through intensive mechanical stirring, assisted by surfactants, to form a homogeneous cellular structure. This structure is stabilized first by the progressive hardening (gelation) of the slurry and then by the sintering process. Unlike traditional glass foams, gel-cast foams can retain the open-celled structure created during foaming, which is crucial for high-value applications like sorbents for organic dyes, recognized as key polluting agents of wastewater [13,22]. Recent studies have focused on adapting gel casting technology to produce foams from recycled glass [8]. Instead of using costly organic polymerization methods (which involve adding monomers, cross-linkers, and catalysts), gelation of glass slurries can be achieved through simple alkali activation. Rincon et al. demonstrated that soda-lime glass slurries in alkaline media (such as KOH aqueous solutions) exhibit distinct pseudoplastic behavior due to the formation of calcium silicate hydrate (C-S-H) gel on the surface of the glass particles [6]. At low shear rates, this gel helps bond the particles together, trapping air bubbles introduced through high shear-rate stirring at low temperatures. Sintering can then take place at 700–800 °C, much lower than the temperatures used for traditional soda-lime glass foams produced with foaming agents [23].

The ‘inorganic gel casting’ process has also been successfully applied to other types of glass, including the production of glass-ceramic foams [23]. Specifically, alkali activation of glass powders may be followed by sinter-crystallization, which combines viscous flow sintering with crystallization. The precipitation of crystals increases the apparent viscosity

of the glass during sintering, helping to "freeze" the open-celled structure formed at lower temperatures.

Foams based on gel casting actually employ some organics. They are not vital for gelation but, in the form of surfactants, support the incorporation of air bubble during intensive mechanical stirring of alkali-activated glass suspensions. These organic compounds may be avoided with an improved hardening mechanism. As reported by Tameni et al. [12], activated glass powders may undergo gelation even independently from the formation of binding compounds (such as C-S-H gels). Adjacent glass particles may 'weld' with each other by condensation reactions involving Si-OH, Al-OH and B-OH groups at the surface. The establishment of strong chemical bonds (e.g., Si-O-Si), bridging adjacent particles, results in insoluble porous monoliths (e.g., resisting to the attack of boiling water), even in the absence of any viscous flow sintering treatment after drying. Porous monoliths, yielded by organic-free glass suspensions, may turn into foams through the inclusion of compounds (e.g., perborates) releasing gas during drying (in a condition of 'direct foaming'). Surfactants may help in homogenizing the pore distribution but in much lower quantity than in the case of foams from gel casting.

The study of the alkaline activation (AA) process to produce foams from recycled cullet glass cannot ignore the environmental impacts assessment. Before developing this process, even on an industrial scale, it is important to evaluate the performance not only from a technological but also an environmental point of view [24]. The Life Cycle Assessment (LCA) methodology was developed to measure the impacts of a good and/or service [25]. Starting from the input-output analysis, the quantification of impacts is obtained for each phase of a product's life cycle and for each phase of a process. Bjørn et al. summarized the strengths of LCA into four main characteristics: it adopts a life cycle perspective, it covers a wide range of environmental issues, it is a quantitative analysis, and it is based on science [26]. LCA is widely used as an ex-post evaluation method across all sectors, providing a standardized approach to assess the environmental impacts of products, processes, and services after their development and implementation [27,28].

The methodology is also applied for scaling up an emerging technology and for comparing its performance and potential with that of the more established incumbent technology [29–32]. Many studies present the advantages and opportunities that derive from the application of the LCA analysis already in the design phase [33]. First of all, the possibility of optimizing processes and supporting the strategic decision-making process [34–36]. After that, making resources and consumption of the process more efficient and reducing costs. Furthermore, the LCA study can be applied to meet regulatory and certification requirements [37–39]. In the construction sector, several products have already been discussed in the literature, accompanied by an LCA study [40–42]. Comparative LCA studies on alkali-activated glass foam processes are currently lacking in the literature [43]. Indeed, most existing works focus on a single type of process and do not offer a systematic comparison between alternative foaming methods. This deficiency limits understanding of relative environmental performances across different process configurations and highlights the novelty and importance of the present study in filling this gap with robust comparative data.

Driven by these motivations, this study aims to quantify the environmental impacts of the four innovative alkaline activation processes studied at the University of Padova. The objective is to understand which is the most environmentally preferable and how environmental performance can be improved before upscaling. The main research questions may be summarized as follows:

- What are the environmental impacts of the four alkaline activation processes?
- How much do the environmental impacts change when using a different energy source?

The analysis of the environmental impact associated with the alkaline activation processes is conducted through the LCA methodology. The Section 2 describes this approach and presents the objective and scope of the study as well as the data collection. The Results paragraph contains the environmental impact assessment, and further insights are presented through sensitivity analysis. The comparison between the results obtained for four processing variants demonstrates that it is possible to determine the environmental impacts and intervene to reduce them before implementing the industrial-scale process. In the Discussion, ample space is dedicated to the limitations and future opportunities of the research.

2. Materials and Methods

The LCA methodology is employed to quantify the environmental impacts associated with the glass foam production process currently under investigation at the laboratory scale. The analysis is carried out in accordance with general standards ISO 14040 and ISO 14044, as well as EN 15804:2012, which is specific to the construction sector [25,44,45]. The methodology consists of four phases: Goal and Scope Definition, Life Cycle Inventory (LCI), Life Cycle Impact Assessment (LCIA), and Interpretation of Results. Conducting an LCA study is an iterative process, where the initial scope is often refined or revised as new information emerges during inventory, impact assessment, and interpretation phases [46].

2.1. Goal and Scope Definition

The aim of the LCA study is to measure the environmental impacts associated with four alkaline activation processes of industrial waste glass cullet for the production of glass foam. The study is aimed at both researchers exploring processes to improve the performance of glass foams and industry companies interested in optimizing the efficiency of their production processes. The selected functional unit is 1 kg of glass foam produced through these processes. The intended function is the use of the product as an insulating material in the construction sector. Using the same functional unit, defining the same function and adopting the same system boundaries is essential to enable a meaningful comparison of the results. Also, using the same data sources and the same impact assessment method makes the studies comparable. The evaluation must be fair to ensure the reliability of the results and the reproducibility of the analysis. The assumptions in Table 1 ensure that the differences arising from the study result from actual impact differences and not from methodological or data discrepancies. The data related to material and energy consumption were obtained through direct measurements and/or technical datasheets of the machinery and equipment actually used in the process. Regarding the type of energy, it reflects the electricity mix fed into the Italian market, as provided by official national sources and consistent with the Ecoinvent database.

Table 1. Assumptions related to the production of 1 kg of glass foam.

Elements	Process	Assumptions
Functional unit	A, B, C, D	1 kg of glass foam produced
Function	A, B, C, D	Insulating material in construction sector
System boundaries	A, B, C, D	Gate-to-gate approach
Data sources	A, B, C, D	Primary data, Technical datasheet or Ecoinvent
Impact assessment method	A, B, C, D	ReCiPe 2016 v1.1 midpoint Egalitarian

2.1.1. Description of the Alkali Activation Process

The primary raw material employed in all the foams' formulations is boro-alumino-silicate glass, referred as BASG. Boro-alumino-silicate glass exhibits a specific chemical

composition which is detailed in Table 2 [47]. The BASG utilized in the present study was kindly sourced by Stevanato Group (Piombino Dese, Padova, Italy) in the form of vials. These glass vials were subjected to milling (Pulverisette 6, Fritsch GmbH, Idar-Oberstein, Germany) and subsequently sieved to achieve a particle size less than 75 µm (IRIS FTL-0300, Filtra Vibraction, Badalona, Spain). The alkali activation was performed by suspending BASG powder in a blended solution of sodium hydroxide (NaOH, Sigma-Aldrich, Gillingham, UK) and potassium hydroxide (KOH, Sigma-Aldrich, Gillingham, UK), specifically at 2.5 mol/L solution (50:50 mol%). This methodology is consistent with previous studies in this field, ensuring effective activation of the glass substrate [13,48].

Table 2. Chemical composition of boro-alumino-silicate glass.

	SiO_2 [wt%]	B_2O_3 [wt%]	Al_2O_3 [wt%]	CaO [wt%]	Na_2O [wt%]	K_2O [wt%]	BaO [wt%]
BASG	72	12	7	1	6	2	<0.1

The liquid-to-solid ratio for the preparation of samples is fixed at 0.5. The precursors are mixed for 3 h at a rotational speed of 500 rpm using a mechanical stirrer (Argolab AM20-D, Modena, Italy). This mixing is designed to ensure homogeneity in the resulting slurry, thereby facilitating optimal reactions during the subsequent processing stage.

The preparation of alkali-activated foams is distinguished by the methodologies employed in the foaming process as well as the associated curing strategies. These curing strategies may vary in terms of temperature, duration, and environment conditions, all of which are critical determinants of the stability and performance of the resulting foams.

In the present study, four distinct industrial glass cullet recycling process based on alkaline activation are considered:

A. Following the protocol outlined by Rincon et al. [23], after the AA process, the resulting slurry is transferred into closed polystyrene molds. The samples are subsequently dried in an oven at 75 °C for 2 h using a Bio-tech oven (Biomedica Elettronica, Padova, Italy) to facilitate preliminary gelation. Afterward, Triton X-100 (polyoxyethylene octyl phenyl ether—$C_{14}H_{22}O(C_2H_4O)_n$, n = 9–10, Sigma-Aldrich, Gillingham, UK) was incorporated to the suspension at a concentration of 4 wt%. Aeration was achieved through vigorous mechanical mixing at 2000 rpm for 10 min. The resultant foams were removed from the molds after an additional drying phase at 75 °C for 24 h, after which they underwent thermal firing at 700 °C for 1 h (BSF-laboratory chamber furnace, Elite Thermal Systems Limited, Leicestershire, UK), with a controlled heating rate of 10 °C/min.

B. Direct foaming experiments are carried out by introducing sodium perborate ($NaBO_3 \cdot H_2O$, Sigma Aldrich, Schnelldorf, Germany) and sodium dodecyl sulphate (SDS, $CH_3(CH_2)_{11}OSO_3Na$, Sigma Aldrich, Schnelldorf, Germany) into a mixture at a concentration of 1 wt% relative to the mass of the glass powder. Homogenization was achieved via mechanical mixing for 10 min at 2000 rpm. The drying phase was extended to 24 h at 40 °C, followed by thermal treatment at 600 °C for 1 h [13].

C. The experimental conditions and methodologies are comparable to those outlined in process B. The type and quantity of foaming agent employed remained consistent. Notably, no additional sintering process was applied during this phase, as the hardening process occurs just upon drying at nearly room temperature (40 °C), for seven days [12], in a condition of 'cold consolidation'.

D. To mitigate the time-consuming nature of the hardening phase, the integration of microwave technology is explored. After the direct foaming expressed as in process B, the specimens are left for 1 day and later subjected to microwave heating (microwave

oven MJ3965BPS, LG, Samsung MS23F300EEK, Samsung Electronics Italia S.p.A, Milano, Italy) for 5 min at 400 W [49].

2.1.2. System Boundaries of Processes

In line with the study's objective, the system boundaries of the processes include only the glass foam production phases (Figure 1). This "gate-to-gate" approach is consistent for comparative studies with a focus on a specific stage of the life cycle [50–52]. The use phase and the end-of-life (EoL) of the product are excluded. The underlying assumption is that all the glass foams produced exhibit the same chemical and physical performance. It is assumed that the use phase and disposal occur in the same manner for all the cases, resulting in equivalent environmental impacts. Therefore, when comparing the four processes, these stages would not introduce significant differences in the results, making it reasonable to exclude them from the system boundaries.

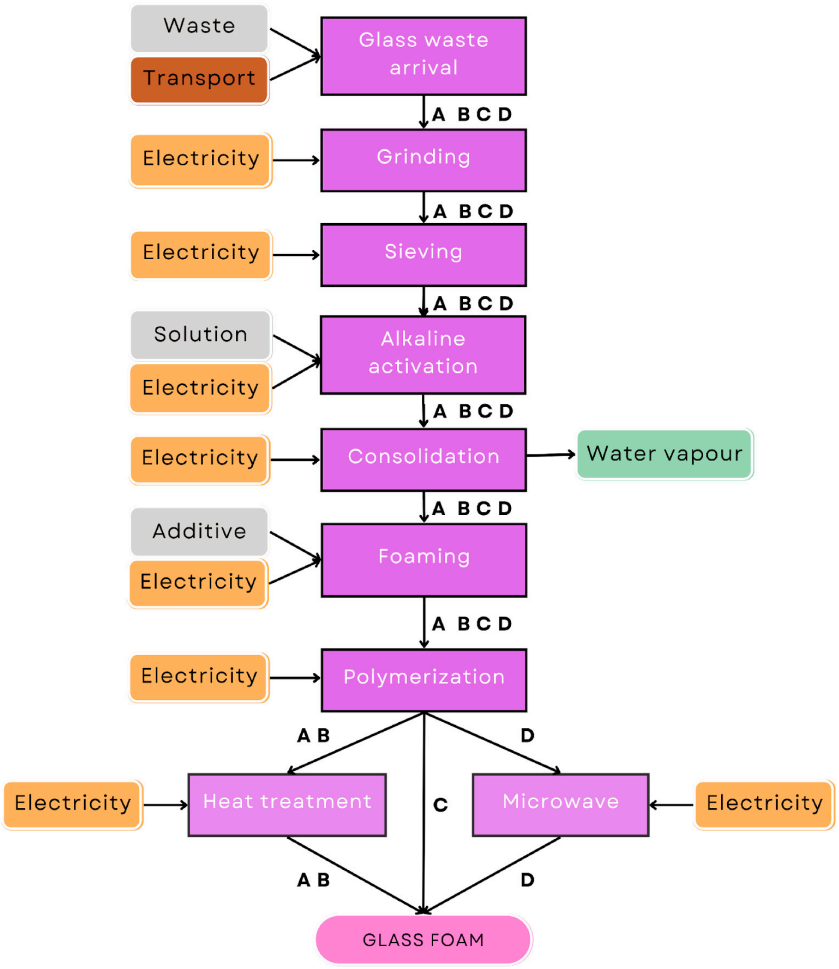

Figure 1. System boundaries of the processes A, B, C, and D.

For each phase of the process under consideration, it is essential to identify the resource flows entering and exiting the process. Inputs may include materials (such as raw materials, semi-finished goods, and auxiliary materials) or natural resources (air, water, energy). Outputs, on the other hand, typically include emissions (to air, water, or soil), waste, and by-products. In this specific case, the main resources used are electricity for machinery and transports, and materials (glass waste, alkaline solution and additives), while the output consists of water vapor generated by the heating processes. It is assumed that water vapor is released only during the consolidation phase of the process.

2.2. Life Cycle Inventory

During the inventory phase, an input-output analysis is conducted for each phase of the alkaline activation processes. The quantification of inputs and outputs must relate to the functional unit and must always be balanced. Primary data is preferred and other information can be sought from the literature or from databases available in the software, which are constantly updated. In this case, the data is collected with the support of the technicians who are involved in the process implementation and laboratory tests. The characterization of the materials used and their quantities is ensured through direct measurements of the process. Missing information is supplemented with data from technical sheets of the equipment and data available in the Ecoinvent 3.10 database. Energy is modelled based on the Italian electricity mix of 2024 (Electricity, low voltage (IT) market for, APOS, System). The energy consumption value for the processes was calculated based on the rated power of the machine, as specified in its technical datasheet, and the actual operating time required to complete the process. Transportation is assumed to be carried out using a heavy commercial vehicle (Transport, Freight, lorry > 32 metric ton, EURO5, Cut-off, System). Table 3 presents the input collected for all four processes. The model is simplified by applying a cut-off criterion of 1% of the product mass. Materials below this threshold are excluded from the system, as their contribution is considered negligible or not relevant. It is assumed that no material loss occurs between phases and that from 1 kg of industrial glass waste, 1 kg of glass foam is produced. According to experimental data, the alkaline solution and additives are in the same quantity as the steam released during the process. While additional materials such as activators (NaOH, KOH, surfactants) are added, their mass is compensated by the evaporation of water during the process, resulting in an approximately equal final mass of glass foam. The only material leaving the process is therefore assumed to be water vapor.

Table 3. Input of the processes related to the production of 1 kg of glass foam.

Step	Process	Input
1-arrival of waste	A, B, C, D	Boro-alumino-silicate glass; 1 kg
	A, B, C, D	Road transport; 30 km
2-grinding	A, B, C, D	Italian energy mix; 0.75 kWh
3-sieving	A, B, C, D	Italian energy mix; 0.10 kWh
4-alkaline activation	A, B, C, D	Italian energy mix; 0.15 kWh
	A, B, C, D	NaOH and KOH; 0.5 kg
5-consolidation	A, B, C, D	Italian energy mix, 1.60 kWh
6-foaming	A, B, C, D	Italian energy mix, 0.008 kWh
	A, B, C, D	$C_{14}H_{22}O(C_2H_4O)n$, n = 9–10; 0.04 kg
	A, B, C, D	$NaBO_3 \cdot H_2O$ and $CH_3(CH_2)_{11}OSO_3Na$; 0.01 kg
7-polymerization	A, B, D	Italian energy mix; 19.2 kWh
	C	Italian energy mix; 134.4 kWh
8-heat treatment	A, B	Italian energy mix; 1.50 kWh
9-microwave	D	Italian energy mix; 0.037 kWh

2.3. Life Cycle Impact Assessment and Interpretation

The environmental impact assessment is conducted using the Simapro software with the available version (SimaPro 10.1.0.4). The ReCiPe 2016 v1.1 midpoint Egalitarian perspective allows a multicriteria assessment. This method is one of the most widely applied in the literature [53,54]. The Egalitarian approach in SimaPro is rigorous and precautionary as it considers a longer time horizon. For this reason, it is often used in contexts that go beyond GWP analysis alone, such as for multi-criteria environmental assessments, as in

this case. The mid-point visualization provides greater scientific robustness and lower uncertainty than endpoint models. In fact, the mid-point approach provides an evaluation for 18 impact categories: global warming (GWP), stratospheric ozone depletion (SOD), ionizing radiation (IR), ozone formation—human health (OFHH), fine particulate matter (FPMF), ozone formation—terrestrial ecosystem (OFTE), terrestrial acidification (TA), freshwater eutrophication (FE), marine eutrophication (ME), terrestrial ecotoxicity (TET), freshwater ecotoxicity (FET), marine ecotoxicity (MET), human toxicity—carcinogenic (HCT), human toxicity—non-carcinogenic (HNCT), land use (LU), mineral resource scarcity (MRS), fossil resource scarcity (FRS), and water consumption (WC). Choosing the Egalitarian (E) approach over the Hierarchist (H) and Individualist (I) approach means achieving results that emphasize long-term environmental responsibility.

3. Results and Discussions

The results are presented as the environmental profile of each process, a comparison of the environmental profiles of the four processes, and a sensitivity analysis. The latter is carried out using a different energy mix as the source for electrical equipment.

3.1. Life Cycle Inventory Results

The first result of the LCA conducted in SimaPro provides a tree or network representation that allows for the identification of input flows of the analyzed process. Figure 2 shows the tree diagram of Process A. In Figure 2, the acronyms a, b, c, d define the processes to which the phases are attributed. Eight subprocesses are identified, but grinding and sieving are not shown because only the main contributions in terms of quantity (above 0.5%) are highlighted. Each step contributes a different percentage to the total value, and the polymerization step is the dominant contributor, representing 83.04%. The diagram clearly shows that energy-intensive operations, particularly polymerization, are the primary hotspots in the production phase.

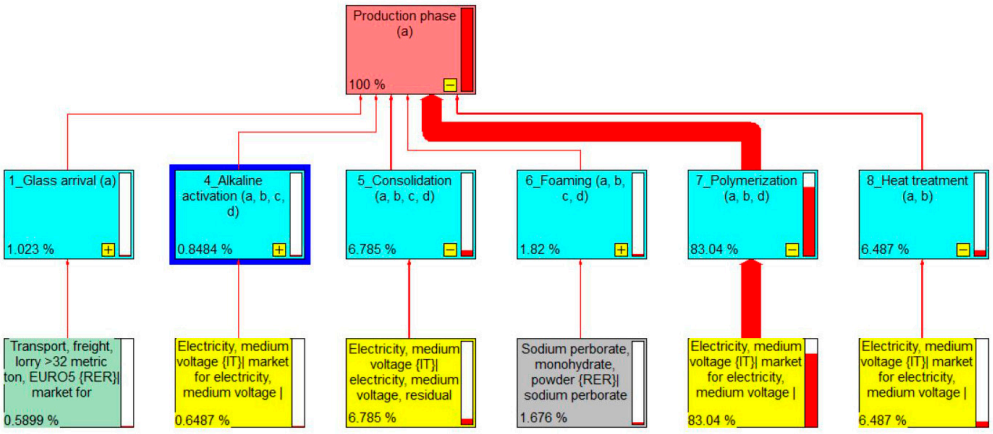

Figure 2. Tree diagram representing the input flows of the process A.

3.2. Life Cycle Impact Assessment Results

The results of the environmental impact assessment of the four alkaline activation processes are reported in Figure 3: Figure 3a represents the results in absolute terms while Figure 3b represents the results in normalized form. Looking at the characterization, process C has the highest impacts for all 18 impact categories. The impact assessment shows that the impacts are due to the use of energy rather than to the type of input and output materials. The processes with the highest energy consumption are also those with the highest impacts. The results show that the process in which hardening was performed into an oven for seven days (process C) is clearly the worst. Its impacts are significant in all

the categories analyzed in the ReCipe:2016 method. The other three cases have a similar environmental profile, and the process that involves the use of the microwave (process D) is confirmed as the best.

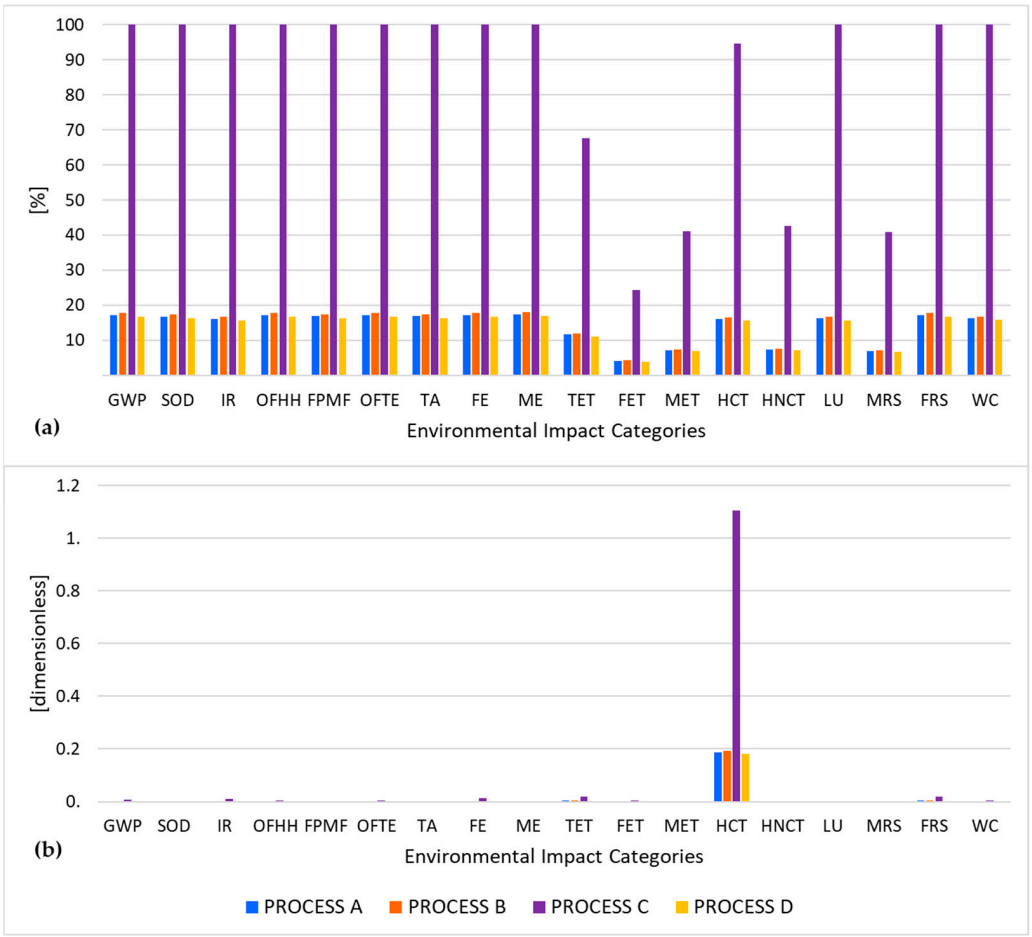

Figure 3. (**a**) Graphical results of the LCIA of four alkaline activation processes. (**b**) Graphical results of the LCIA of four alkaline activation processes in normalized form.

Since the units of measurement for impact categories vary widely (e.g., kg CO_2, kg SO_2 eq, m^3 of water, etc.), normalization converts all results into dimensionless values, making them comparable to one another. This representation helps identify the most significant impact categories for a given system. Normalized results highlight that the Human Carcinogenic Eco-toxicity category is the most relevant. This fact depends on the large use of energy which mostly affects this category.

Other recent investigations have shown that it is possible to reduce the environmental impact of the process by eliminating the sintering phase. In this regard, cold consolidation upon weak alkali activation of glass powders allows foams with competitive mechanical properties to be obtained at nearly room temperature [13]. Drying treatment of unfired glass foams can be greatly reduced by microwave heating, saving energy and leading to more chemically stable products [49].

3.3. Sensitivity Analysis

A sensitivity analysis is relevant when scientists are studying the performance of processes, in particular before up-scaling. It is used to evaluate how impacts change if a variable is changed. The choice to change the energy source is justified by the fact that this is the component that most influences the results. The starting hypothesis is that solar energy

can be used to operate all the equipment through the use of already-installed photovoltaic (PV) panels. Therefore, the electricity from the Italian energy mix (Electricity, low voltage [IT], market for, APOS, System) is replaced with renewable energy from photovoltaic panels (Electricity, low voltage [IT], electricity production, photovoltaic, 3 kWp, slanted-roof installation, multi-Si panels, mounted, Cut-off, System). Furthermore, it is a plausible change in the case of building an industrial-scale plant.

Table 4 shows the comparison between the environmental performances of the four processes, initially using the Italian energy mix (Mix) and then energy from photovoltaic panels (PV). The use of energy from photovoltaics is preferable for most impact categories. The only impact categories that are exceptions are MRS, HNCT, MET, FET, and TET. The first measures the effects related to the availability of mineral resources, while the others measure the toxic impact of chemicals. This result is justified by the use of silicon-based photovoltaic panels. Therefore, these categories are more influenced by the chemical substance and material flows within the system. Additionally, they are particularly linked to long-term impacts that are difficult to reverse. The result is thus explained by the use of polycrystalline silicon photovoltaic panels. Even with the use of solar energy, case C proves to be worse for all the impact categories compared to case A, B, and D.

Table 4. Results of the sensitivity analysis of the processes.

	Process A		**Process B**		**Process C**		**Process D**	
	Mix	**PV**	**Mix**	**PV**	**Mix**	**PV**	**Mix**	**PV**
GWP	17.2719	3.5211	17.824	3.5843	100	20.3544	16.767	3.3686
SOD	16.776	2.6563	17.332	2.6887	100	15.3279	16.2686	2.5261
IR	16.044	2.3608	16.6579	2.4366	100	13.8092	15.5858	2.2903
OFHH	17.2646	6.178	17.7544	6.2728	100	35.6697	16.6965	5.8947
FPMF	16.8444	9.4965	17.3918	9.7759	100	56.5377	16.3292	9.1744
OFTE	17.263	6.027	17.7529	6.1165	100	34.784	16.695	5.7477
TA	16.8444	7.6399	17.4114	7.8709	100	45.5077	16.349	7.3868
FE	17.1324	14.9438	17.7158	15.4624	100	89.0582	16.6574	14.5157
ME	17.4473	11.9418	18.0169	12.183	100	68.4856	16.9623	11.5959
TET	11.7015	16.837	11.8814	17.218	67.768	100	11.1626	16.1533
FET	4.1011	16.4889	4.2329	17.0897	24.4053	100	3.9735	16.0233
MET	7.1044	16.6557	7.2897	17.2074	41.0687	100	6.8552	16.1425
HCT	16.11	16.8113	16.5735	17.3087	94.7238	100	15.5683	16.245
HNCT	7.397	16.6655	7.5917	17.2169	42.6434	100	7.1409	16.1521
LU	16.3363	5.1039	16.7882	5.113	100	29.0885	15.7179	4.8046
MRS	6.9983	16.6622	7.2039	17.2343	40.9521	100	6.7698	16.1697
FRS	17.26	2.7176	17.8134	2.7526	100	15.5826	16.7562	2.5875
WC	16.2135	6.2732	16.828	6.497	100	37.3995	15.7582	6.0996

4. Conclusions

This study examines the environmental profile of industrial glass cullet recycling using the alkaline activation process. Through an LCA, the environmental performance of different process was assessed, with the aim of identifying critical phases and opportunities for impact reduction. The findings highlight that the most environmentally burdensome scenario is the one in which hardening was carried out in an oven for seven days. This result is consistent with expectations, as processes with higher energy demands generally correspond to greater environmental impacts. In particular, categories such as climate change, fossil fuel depletion, and particulate matter formation are directly influenced by the intensity of energy consumption during production phases. A significant reduction in overall environmental impacts can be observed when renewable energy sources are

used in place of conventional ones. However, this positive effect is not uniform across all impact categories. In fact, impact categories related to mineral resource depletion and human/ecotoxicological effects tend to worsen in scenarios involving the use of polycrystalline silicon photovoltaic panels. Although renewables reduce emissions during use, their production phase involves intensive extraction and processing of raw materials, which affects the overall balance in those specific categories. This observation underlines a common issue in LCA called burden-shifting. While improvements in one area (e.g., lower greenhouse gas emissions) may be achieved, they can sometimes lead to unintended trade-offs in others, especially when alternative technologies introduce new forms of resource consumption or pollution.

The main limitation of the study relates to the availability of primary data, particularly regarding energy use during certain processing steps. While the technical datasheets provide a useful baseline, they are associated with a degree of uncertainty, which should be addressed in future research.

Author Contributions: Conceptualization, E.B. (Enrico Bernardo) and A.M.; methodology, E.B. (Elena Battiston) and A.M.; software, E.B. (Elena Battiston) and A.M.; validation, A.M., formal analysis, A.M.; investigation, F.C. and G.T.; resources, F.C., G.T., and E.B. (Enrico Bernardo); data curation, E.B. (Elena Battiston), F.C., and G.T.; writing—original draft preparation, E.B. (Elena Battiston), F.C., and G.T.; writing—review and editing, E.B. (Enrico Bernardo) and A.M.; visualization, E.B. (Elena Battiston), F.C., and G.T.; supervision, E.B. (Enrico Bernardo) and A.M.; project administration, E.B. (Enrico Bernardo); funding acquisition, E.B. (Enrico Bernardo). All authors have read and agreed to the published version of the manuscript.

Funding: This research was funded by the Italian Ministry of University and Research (MUR) in the framework of the GLASS_Trea.S.U.Res (GLASS-based TREAtments for Sustainable Upcycling of inorganic RESidues) project (PRIN 2022 PNRR project #P2022S4TK2).

Institutional Review Board Statement: Not applicable.

Informed Consent Statement: Not applicable.

Data Availability Statement: Data will be made available on request.

Acknowledgments: The authors thank Stevanato Group (Piombino Dese, Italy) for supplying BASG glass.

Conflicts of Interest: The authors declare no conflicts of interest. Stevanato Group (Piombino Dese, Italy) provided BASG glass. This company and funders had no role in the design of the study; in the collection, analyses, or interpretation of data; in the writing of the manuscript; or in the decision to publish the results.

Abbreviations

The following abbreviations are used in this manuscript:

AA	Alkaline Activation
BASG	Boro-alumino-silicate glass
CE	Circular Economy
E	Egalitarian
EoL	End of Life
FPMF	Fine Particulate Matter Formation
FRS	Fossil Resource Scarcity
FET	Freshwater Eco-Toxicity
FE	Freshwater Eutrophication
GWP	Global warming potential
H	Hierarchist
HCT	Human Carcinogenic toxicity

HNCT	Human Non-Carcinogenic Toxicity
I	Individualist
IR	Ionizing Radiation
LU	Land Use
LCA	Life Cycle Assessment
LCI	Life Cycle Inventory
LCIA	Life Cycle Impact Assessment
MET	Marine Eco-Toxicity
ME	Marine Eutrophication
MRS	Mineral Resource Scarcity
OFHH	Ozone Formation, Human Health
OFTE	Ozone Formation, Terrestrial Ecosystems
PV	Photovoltaic
SOD	Stratospheric Ozone Depletion
TA	Terrestrial Acidification
TE	Terrestrial Eco-Toxicity
WC	Water Consumption

References

1. Curran, M.A. Life Cycle Impact Assessment. In *Life Cycle Assessment Handbook: A Guide for Environmentally Sustainable Products*; Curran, M.A., Ed.; Wiley: Hoboken, NJ, USA, 2012; Chapter 16. [CrossRef]
2. Adekomaya, O.; Majozi, T. Mitigating environmental impact of waste glass materials: Review of the existing reclamation options and future outlook. *Environ. Sci. Pollut. Res.* **2021**, *28*, 10488–10502. [CrossRef] [PubMed]
3. Fu, C.; Liang, J.; Yang, G.; Dagestani, A.A.; Liu, W.; Luo, X.; Zeng, B.; Wu, H.; Huang, M.; Lin, L.; et al. Recycling of waste glass as raw materials for the preparation of self-cleaning, light-weight and high-strength porous ceramics. *J. Clean. Prod.* **2021**, *317*, 128395. [CrossRef]
4. Bonifazi, G.; Serranti, S. Imaging spectroscopy based strategies for ceramic glass contaminants removal in glass recycling. *Waste Manag.* **2006**, *26*, 627–639. [CrossRef]
5. Farcomeni, A.; Serranti, S.; Bonifazi, G. Non-parametric analysis of infrared spectra for recognition of glass and glass ceramic fragments in recycling plants. *Waste Manag.* **2008**, *28*, 557–564. [CrossRef]
6. Rincón, A.; Giacomello, G.; Pasetto, M.; Bernardo, E. Novel 'inorganic gel casting' process for the manufacturing of glass foams. *J. Eur. Ceram. Soc.* **2017**, *37*, 2227–2234. [CrossRef]
7. Delbari, S.A.; Hof, L.A. Glass waste circular economy—Advancing to high-value glass sheets recovery using industry 4.0 and 5.0 technologies. *J. Clean. Prod.* **2024**, *462*, 142629. [CrossRef]
8. Rincón, A.; Marangoni, M.; Cetin, S.; Bernardo, E. Recycling of inorganic waste in monolithic and cellular glass-based materials for structural and functional applications. *J. Chem. Technol. Biotechnol.* **2016**, *91*, 1946–1961. [CrossRef]
9. Singh, N.; Li, J.; Zeng, X. Solutions and challenges in recycling waste cathode-ray tubes. *J. Clean. Prod.* **2016**, *133*, 188–200. [CrossRef]
10. Baek, C.R.; Kim, H.D.; Jang, Y.-C. Exploring glass recycling: Trends, technologies, and future trajectories. *Environ. Eng. Res.* **2025**, *30*, 240241. [CrossRef]
11. Guadagnino, E.; Guglielmi, M.; Nicoletti, F. Glass: The best material for pharmaceutical packaging. *Int. J. Appl. Glass Sci.* **2022**, *13*, 281–291. [CrossRef]
12. Tameni, G.; Lago, D.; Kaňková, H.; Buňová, L.; Kraxner, J.; Galusek, D.; Dawson, D.M.; Ashbrook, S.E.; Bernardo, E. Alkaline attack of boro-alumino-silicate glass: New insights of the molecular mechanism of cold consolidation and new applications. *Open Ceram.* **2025**, *21*, 100726. [CrossRef]
13. Mehta, A.; Karbouche, K.; Kraxner, J.; Elsayed, H.; Galusek, D.; Bernardo, E. Upcycling of Pharmaceutical Glass into Highly Porous Ceramics: From Foams to Membranes. *Materials* **2022**, *15*, 3784. [CrossRef] [PubMed]
14. Bristogianni, T.; Oikonomopoulou, F. Glass up-casting: A review on the current challenges in glass recycling and a novel approach for recycling 'as-is' glass waste into volumetric glass components. *Glass Struct. Eng.* **2023**, *8*, 255–302. [CrossRef]
15. Iacocca, R.G.; Allgeier, M. Corrosive attack of glass by a pharmaceutical compound. *J. Mater. Sci.* **2007**, *42*, 801–811. [CrossRef]
16. Singh, P.J.; Sung, K.; Cooper, T.; West, K.; Mont, O. Challenges and opportunities for scaling up upcycling businesses—The case of textile and wood upcycling businesses in the UK. *Resour. Conserv. Recycl.* **2019**, *150*, 104439. [CrossRef]
17. Shi, X.; Liao, Q.; Liu, L.; Deng, F.; Chen, F.; Wang, F.; Zhu, H.; Zhang, L.; Liu, C. Utilizing multi-solid waste to prepare and characterize foam glass ceramics. *Ceram. Int.* **2023**, *49*, 35534–35543. [CrossRef]

18. Zhang, J.; Liu, B.; Zhang, S. A review of glass ceramic foams prepared from solid wastes: Processing, heavy-metal solidification and volatilization, applications. *Sci. Total Environ.* **2021**, *781*, 146727. [CrossRef]
19. Meylan, G.; Ami, H.; Spoerri, A. Transitions of municipal solid waste management. Part II: Hybrid life cycle assessment of Swiss glass-packaging disposal. *Resour. Conserv. Recycl.* **2014**, *86*, 16–27. [CrossRef]
20. Sepúlveda, P.; Jones, J.R.; Hench, L.L. In vitro dissolution of melt-derived 45S5 and sol-gel derived 58S bioactive glasses. *J. Biomed. Mater. Res.* **2002**, *61*, 301–311. [CrossRef]
21. Wu, Z.Y.; Hill, R.G.; Yue, S.; Nightingale, D.; Lee, P.D.; Jones, J.R. Melt-derived bioactive glass scaffolds produced by a gel-cast foaming technique. *Acta Biomater.* **2011**, *7*, 1807–1816. [CrossRef]
22. Bruzzoniti, M.C.; Appendini, M.; Rivoira, L.; Onida, B.; Del Bubba, M.; Jana, P.; Sorarù, G.D. Polymer-derived ceramic aerogels as sorbent materials for the removal of organic dyes from aqueous solutions. *J. Am. Ceram. Soc.* **2018**, *101*, 821–830. [CrossRef]
23. Romero, A.R.; Tamburini, S.; Taveri, G.; Toušek, J.; Dlouhy, I.; Bernardo, E. Extension of the "Inorganic Gel Casting" Process to the Manufacturing of Boro-Alumino-Silicate Glass Foams. *Materials* **2018**, *11*, 2545. [CrossRef]
24. Riondet, L.; Rio, M.; Perrot-Bernardet, V.; Zwolinski, P. Emerging technologies upscaling: A framework for matching LCA practices with upscaling archetypes. *Sustain. Prod. Consum.* **2024**, *50*, 347–363. [CrossRef]
25. *ISO 14044*; Environmental Management—Life Cycle Assessment—Requirements and Guidelines. International Organization for Standardization: Geneva, Switzerland, 2006.
26. Bjørn, A.; Owsianiak, M.; Molin, C.; Laurent, A. Main characteristics of LCA. In *Life Cycle Assessment*; Hauschild, M., Rosenbaum, R., Olsen, S., Eds.; Springer: Cham, Switzerland, 2018. [CrossRef]
27. Hetherington, A.C.; Borrion, A.L.; Griffiths, O.G.; Panoutsou, N.L.; Webb, J.S.; Kendrick, A.M. Use of LCA as a development tool within early research: Challenges and issues across different sectors. *Int. J. Life Cycle Assess.* **2014**, *19*, 130–143. [CrossRef]
28. Liu, M.; Zhu, G.; Tian, Y. The historical evolution and research trends of life cycle assessment. *Green Carbon* **2024**, *2*, 425–437. [CrossRef]
29. Cucurachi, S.; van der Giesen, C.; Guinée, J. Ex-ante LCA of emerging technologies. *Procedia CIRP* **2018**, *69*, 463–468. [CrossRef]
30. Tan, L.; Mandley, S.J.; Peijnenburg, W.; der Loop, S.L.W.-V.; Giesen, D.; Legradi, J.B.; Shen, L. Combining ex-ante LCA and EHS screening to assist green design: A case study of cellulose nanocrystal foam. *J. Clean. Prod.* **2018**, *178*, 494–506. [CrossRef]
31. Georgiades, M.; Kilcan, C.Ö.; Giels, M.; Stewart, D.I.; Zhan, A.; Muñoz, J.F.; Vandepitte, N.; Dewulf, S. Ex-ante life cycle assessment of bauxite residue vitrification technology. *Int. J. Life Cycle Assess.* **2025**, *30*, 1896–1911. [CrossRef]
32. Bergerson, A.; Brandt, A.; Cresko, J.; Carbajales-Dale, M.; MacLean, H.L.; Matthews, H.S.; McCoy, S.; McManus, M.; Miller, S.A.; Morrow, W.R.; et al. Life cycle assessment of emerging technologies: Evaluation techniques at different stages of market and technical maturity. *J. Ind. Ecol.* **2020**, *24*, 11–25. [CrossRef]
33. Moni, S.M.; Mahmud, R.; High, K.; Carbajales-Dale, M. Life cycle assessment of emerging technologies: A review. *J. Ind. Ecol.* **2020**, *24*, 52–63. [CrossRef]
34. Subal, L.; Braunschweig, A.; Hellweg, S. The relevance of life cycle assessment to decision-making in companies and public authorities. *J. Clean. Prod.* **2024**, *435*, 140520. [CrossRef]
35. Barbhuiya, S.; Das, B.B. Life Cycle Assessment of construction materials: Methodologies, applications and future directions for sustainable decision-making. *Case Stud. Constr. Mater.* **2023**, *19*, e02326. [CrossRef]
36. Pryshlakivsky, J.; Searcy, C. Life Cycle Assessment as a decision-making tool: Practitioner and managerial considerations. *J. Clean. Prod.* **2021**, *309*, 127344. [CrossRef]
37. European Commission. Recommendation on the Use of Common Methods to Measure and Communicate the Life Cycle Environmental Performance of Products and Organisations. (2013/179/EU). Available online: https://eur-lex.europa.eu/legal-content/EN/TXT/?uri=CELEX%3A32013H0179 (accessed on 30 July 2025).
38. Directive 2009/125/EC of the European Parliament and of the Council of 21 October 2009 Establishing a Framework for the Setting of Eco-Design Requirements for Energy-Related Products. Available online: https://eur-lex.europa.eu/legal-content/EN/TXT/?uri=CELEX:32009L0125 (accessed on 30 July 2025).
39. *ISO 14025:2006*; Environmental Labels and Declarations—Type III Environmental Declarations—Principles and Procedures. International Organization for Standardization: Geneva, Switzerland, 2006.
40. Farahzadi, L.; Tellnes, L.G.F.; Shafei, B.; Kioumarsi, M. Life-cycle environmental assessment of ultra-high-performance concrete with sustainable materials and fiber substitutions. *Clean. Eng. Technol.* **2024**, *23*, 100846. [CrossRef]
41. Mazzi, A.; Sciarrone, M.; Bernardo, E. Environmental performance of glass foam as insulation material from waste glass with the alkali activation process. *Heliyon* **2023**, *9*, 19001. [CrossRef]
42. Rodrigues, C.; König, J.; Freire, F. Prospective life cycle assessment of a novel building system with improved foam glass incorporating high recycled content. *Sustain. Prod. Consum.* **2023**, *36*, 161–170. [CrossRef]
43. Nodehi, M.; Aguayo, F.; Madey, N.; Zhou, L. A comparative review of polymer, bacterial-based, and alkali-activated (also geopolymer) binders: Production, mechanical, durability, and environmental impacts life cycle assessment (LCA). *Constr. Build. Mater.* **2024**, *422*, 135816. [CrossRef]

44. *ISO 14040*; Environmental Management—Life Cycle Assessment—Principles and Framework, 2nd ed. International Organization for Standardization: Geneva, Switzerland, 2006.
45. *EN 15804:2012+A2:2019*; Sustainability of Construction Works—Environmental Product Declarations—Core Rules for the Product Category of Construction Products. European Committee for Standardization (CEN): Brussels, Belgium, 2019.
46. European Commission. Joint Research Centre. *Institute for Environment and Sustainability, International Reference Life Cycle Data System (ILCD) Handbook: General Guide for Life Cycle Assessment: Detailed Guidance. LU: Publications Office, 2010*. Available online: https://data.europa.eu/doi/10.2788/38479 (accessed on 15 May 2025).
47. Yue, Y.; Tuheen, M.I.; Du, J. Borosilicate glasses. In *Encyclopedia of Materials: Technical Ceramics and Glasses*; Pomeroy, M., Ed.; Elsevier: Amsterdam, The Netherlands, 2021; pp. 519–539. [CrossRef]
48. Tameni, G.; Cammelli, F.; Elsayed, H.; Stangherlin, F.; Bernardo, E. Upcycling of Boro-Alumino-Silicate Pharmaceutical Glass in Sustainable Construction Materials. *Detritus* **2022**, *20*, 17–21. [CrossRef]
49. Tameni, G.; Carollo, F.; Cavazzini, A.M.; Forzan, M.; Bernardo, E. Microwave assisted cold consolidation of alkali activated suspension of glass waste powders. *Mater. Lett.* **2025**, *389*, 138354. [CrossRef]
50. Zhang, S.; Xu, C.; Xie, R.; Yu, H.; Sun, M.; Li, F. Environmental assessment of fabric wet processing from gate-to-gate perspective: Comparative study of weaving and materials. *Sci. Total Environ.* **2023**, *857*, 159495. [CrossRef]
51. Pražanová, A.; Fridrich, M.; Weinzettel, J.; Knap, V. Gate-to-gate life cycle assessment of lithium-ion battery recycling pre-treatment. *Clean. Environ. Syst.* **2025**, *16*, 100263. [CrossRef]
52. Karadirek, I.E.; Erkaya, O.; Ciggin, A.S. Comparative life cycle assessment of sewage sludge drying by solar and thermal drying technologies. *Waste Manag.* **2025**, *201*, 114826. [CrossRef] [PubMed]
53. Huijbregts, M.A.J.; Steinmann, Z.J.N.; Elshout, P.M.F.; Stam, G.; Verones, F.; Vieira, M.; Zijp, M.; Hollander, A.; van Zelm, R. ReCiPe2016: A harmonised life cycle impact assessment method at midpoint and endpoint level. *Int. J. Life Cycle Assess.* **2017**, *22*, 138–147. [CrossRef]
54. Rybaczewska-Błażejowska, M.; Jezierski, D. Comparison of ReCiPe 2016, ILCD 2011, CML-IA baseline and IMPACT 2002+ LCIA methods: A case study based on the electricity consumption mix in Europe. *Int. J. Life Cycle Assess.* **2024**, *29*, 1799–1817. [CrossRef]

Disclaimer/Publisher's Note: The statements, opinions and data contained in all publications are solely those of the individual author(s) and contributor(s) and not of MDPI and/or the editor(s). MDPI and/or the editor(s) disclaim responsibility for any injury to people or property resulting from any ideas, methods, instructions or products referred to in the content.