Journal of
Manufacturing and Materials Processing

MDPI

Article

Functional Architecture and Exploratory Operational Assessment of a Mobile Hydraulic Clay-Brick Molding Machine for Small-Scale Manufacturing

Luis Alberto Flores Chaires, José Ricardo Gómez Rodríguez *, Hugo Pineda Martínez, Ana Gabriela Castañeda Miranda, Remberto Sandoval Aréchiga, Víktor Ivan Rodríguez Abdala, Salvador Ibarra Delgado and Oscar Osvaldo Ordaz-García

Posgrado en Ingeniería para la Innovación Tecnológica, Unidad Académica de Ingeniería Eléctrica, Universidad Autónoma de Zacatecas, Campus UAZ Siglo XXI, Carretera Zacatecas–Guadalajara km 6, Ejido la Escondida, Zacatecas 98160, Mexico; luischaires@uaz.edu.mx (L.A.F.C.); hpineda@uaz.edu.mx (H.P.M.); agmiranda@uaz.edu.mx (A.G.C.M.); rsandoval@uaz.edu.mx (R.S.A.); abdala@uaz.edu.mx (V.I.R.A.); sibarra@uaz.edu.mx (S.I.D.); oscarordazg@uaz.edu.mx (O.O.O.-G.)
* Correspondence: jrgrodri@uaz.edu.mx

Abstract

Small-scale clay-brick yards require molding equipment that increases output while remaining mobile, locally serviceable, and compatible with intermittent material supply. This article documents the functional architecture and exploratory operational performance of the mobile 12-cavity hydraulic clay-brick molding machine (ML12). Its design contribution is the integration of a dimensioned wheeled steel chassis, seated paired-lever controls, a translating feed hopper/distributor, a 12-cavity mold, two vertical hydraulic actuators, and a water-spray cleaning subsystem in a four-stage operating cycle. A retrospective concept-appraisal matrix compares this architecture with fixed automated and mobile manual concepts; equal weighting and one-at-a-time ±25% weight variations preserve the ML12's highest internal score, without establishing stakeholder preference or empirical superiority. The evidence base also comprises sequential daily production logs: ten days of traditional manual molding followed by ten days of ML12-assisted molding. Mean gross green-brick output was 720 ± 86 bricks/day in the traditional period and 1495 ± 16 bricks/day in the ML12 period; corresponding descriptive throughputs were 86.5 and 186.9 bricks/h. A rejection-rate sensitivity analysis shows that, if traditional production had no rejects, ML12 conforming output would equal the traditional gross mean at a 51.8% ML12 rejection rate; this quantity boundary is not an estimate of quality or economic break-even. A preliminary linear-static finite-element case for a reconstructed frame returned a maximum von Mises stress of 112.3 MPa, 1.82 mm resultant displacement, and a minimum elastic safety factor of 2.23 on the reported medium mesh; the result is limited to the specified 1.0 kN load case and is not structural certification of the complete machine. Because the operational comparison was non-randomized and did not control staffing, operators, clay batch, moisture, weather, energy use, or rejection rate, the observed difference cannot be attributed exclusively to the machine. The results establish the machine architecture, an operational signal, and a bounded preliminary frame response, but not brick quality, ergonomic benefit, full structural safety, environmental benefit, or commercial return.

Keywords: brick-making machine; clay brick; hydraulic molding; functional architecture; small-scale manufacturing; exploratory assessment; mobile machinery

Check for updates

Academic Editor: Jun Zha

Received: 14 July 2026
Revised: 25 August 2026
Accepted: 26 August 2026
Published: 2 September 2026

Copyright: © 2026 by the authors. Licensee MDPI, Basel, Switzerland. This article is an open access article distributed under the terms and conditions of the Creative Commons Attribution (CC BY) license.

1. Introduction

Artisanal brick production remains economically important in Mexico and other low- and middle-income regions, but it commonly operates with limited mechanization, narrow investment capacity, and physically demanding manual practices. A Mexican market study identified approximately 17,000 artisanal production units in the eight states covered by its principal survey [1]. Latin American reviews describe heterogeneous levels of mechanization and persistent technical and economic constraints [2–4]. Participatory research in Mexico has likewise identified production inefficiency as a central concern and recommended affordable, locally maintainable technologies designed around producer constraints [5]. The present work concerns the molding of unfired (green) bricks; clay preparation, drying, and firing are outside the machine boundary.

Manual molding and material handling can involve prolonged squatting, trunk flexion, lifting, pushing, and pulling. Studies of brick workers associate these tasks with musculoskeletal complaints in the back, waist, knees, and lower limbs [6,7]. Work reorganization has increased output in manual brick manufacture [8], and a small brick-press intervention shortened task time while improving posture-related scores [9]. These findings motivate operator-centered equipment, but ergonomic benefit must be measured rather than inferred from the presence of a seat or hydraulic actuation.

Product quality also constrains useful production. Compaction rate and pressure affect compressed-earth-block density and strength [10,11], while mixture composition and test procedure influence measured mechanical performance [12–15]. A recent systematic review similarly emphasizes control of materials, compaction, curing, and standardized characterization [16]. Accordingly, higher gross molding output is not equivalent to higher conforming output unless dimensional variation, moisture, density, rejection rate, compressive strength, and water absorption are measured.

Research machines range from small presses developed for artisanal ceramic production [17,18], through controllable-feed hydraulic presses [19], to fixed, connected production systems [20]. Recent ceramic-forming research demonstrates that die geometry and contact conditions influence clay velocity, drag, surface quality, and product yield [21]. Such systems demonstrate the potential of mechanization, but fixed installation, control complexity, and capital requirements may be unsuitable for dispersed artisanal yards. The design gap addressed here is therefore not maximum automation; it is the integration of mobility, multi-cavity molding, local hydraulic control, cleaning access, and a compact operator station in a fabricable platform. Environmental studies of Mexican artisanal brick production focus chiefly on fuel and kiln emissions [22,23]. Because the ML12 changes only molding, no firing-stage or life-cycle environmental benefit is claimed.

This article examines the mobile 12-cavity hydraulic clay-brick molding machine (ML12). Its objectives are to: (i) document the requirements, dimensions, components, and four-stage working principle; (ii) appraise the architecture through a transparent retrospective decision matrix and weight-sensitivity analysis; (iii) descriptively compare ten-day traditional and ML12 production records; (iv) quantify the rejection-rate break-even boundary implied by the gross production means; (v) report a bounded preliminary linear-static assessment of a reconstructed frame; and (vi) define the evidentiary limits of the cost, structural, ergonomic, and product-quality information. The scientific contribution is a traceable functional-architecture analysis and critical reanalysis of existing operational and structural evidence, with rated capacity, observed output, derived sensitivity thresholds, assumptions, and unmeasured outcomes kept explicitly separate.

2. Materials and Methods

2.1. Study Materials and Analytical Scope

The study materials comprised a machine design description, six SOLIDWORKS 2026 SP1.1 engineering drawing sheets and a SOLIDWORKS Simulation record (Dassault Systèmes SolidWorks Corporation, Waltham, MA, USA), component dimensions, a four-stage lever sequence, the Mexican utility-model record MX 5827 B [24], and two daily production tables. The operational analysis was restricted to variables directly reported in these materials. Economic estimates were not calculated because the available worksheet did not provide traceable labor allocation, a bill of materials, acquisition cost, energy consumption, maintenance, or useful life. Product-quality, energy, ergonomic, and full-machine structural performance remained outside the quantitative analysis because the corresponding measurements or complete validated load envelope were absent. Table 1 summarizes the resulting evidence boundary.

Table 1. Evidence boundary of the present study.

Domain	Available Evidence	Not Recorded or Not Verifiable
Machine design	Six drawing sheets, chassis and subsystem dimensions, wheel sizes, 12-cavity mold, spray subsystem, nominal staffing and four-stage lever sequence	Native CAD assembly, hydraulic pressure, cylinder bore/stroke, pump power, cycle-level forces and as-built dimensional inspection
Operation	Daily output and reported working time for two sequential 10-day periods	Actual staffing by day, operator identity, downtime, raw-material batch, moisture, ambient conditions and energy use
Product quality	Gross count of green bricks	Dimensional deviation, density, moisture, rejection rate, fired compressive strength and water absorption
Economics	One aggregate worksheet with untraceable labor-hour and materials/input entries	Verified bill of materials, acquisition, depreciation, maintenance, energy/fuel, tooling, staffing, land, financing, taxes and quality losses
Structure and ergonomics	Preliminary linear-static frame model, von Mises stress, displacement, elastic safety factor, three mesh levels, reactions, and qualitative operator-centered intent	Full-machine load envelope, as-built material verification, proof load, strain/deflection validation, buckling, fatigue, posture scores, force exposure or physiological measures

2.2. Design Requirements and Functional Architecture

The documented requirements were mobility within a production yard, simultaneous molding of multiple units, seated command of the main movements, controlled transfer of mixture across the mold, vertical hydraulic compaction, access for water-assisted cleaning, local steel fabrication, and compatibility with external loading equipment. These are design intentions; the present dataset does not provide quantitative verification of

ergonomic, structural, or maintainability requirements. Table 2 maps each requirement to the implemented feature and the evidence needed for validation.

Table 2. Requirement-to-feature mapping for the ML12.

Requirement	Implemented Feature	Required Validation
Yard mobility	Two rear pneumatic wheels and two front swivel casters on a compact chassis	Traction, turning radius, stability and ground-pressure tests
Batch molding	Removable 12-cavity mold	Dimensional capability and reject-rate study
Operator control	Seat and two manually commanded levers	Task analysis and instrumented ergonomic assessment
Material distribution	Translating hopper/distributor guided along side rails	Fill-mass uniformity across all cavities
Compaction	Two vertical hydraulic actuators	Pressure/force calibration and brick-property correlation
Cleaning continuity	Water-spray openings adjacent to the mold/rail region	Water use, cleaning time, adhesion and downtime measurements
Local fabrication	Welded rectangular-tube steel chassis	Drawings, weld procedure, inspection and proof-load testing
Intermittent material supply	Hopper reload by tractor/front loader or equivalent equipment	Cycle balance, loading safety and energy measurement

The chassis is documented as 1.70 m long by 1.27 m wide and fabricated from 2 in × 4 in, 14-gauge rectangular steel tubing. The design specifies 13 × 5.00–6 rear tires (standard tire-size designation), 4 × 1.25 in (102 × 32 mm) front casters, two vertical hydraulic actuators, a 12-cavity mold, a translating feed hopper, and a water-spray region adjacent to the working rails. Figure 1 presents the complete arrangement, while Figure 2 gives dimensioned hopper and mold drawings. Dimensions transcribed in Table 3 are drawing values rather than measurements of an as-built prototype.

Table 3. Principal dimensions transcribed from the available design drawings.

Subsystem	Documented Dimension	Evidence Status
Chassis envelope	1.70 m × 1.27 m	Overall design description
Chassis tube	2 in × 4 in, 14 gauge	Specified section; steel grade and certified wall thickness unavailable
Rear wheels	13 × 5.00–6	Design specification
Front casters	4 × 1.25 in (102 × 32 mm)	Design specification
Hopper/distributor	32.71 in length; 19.69 in total height; 5.32 in lower outlet	Transcribed from drawing; requires CAD/as-built confirmation
Mold envelope	33.68 in × 21.72 in; 12 cavities in a 3 × 4 array	Transcribed from drawing; cavity dimensions require CAD confirmation

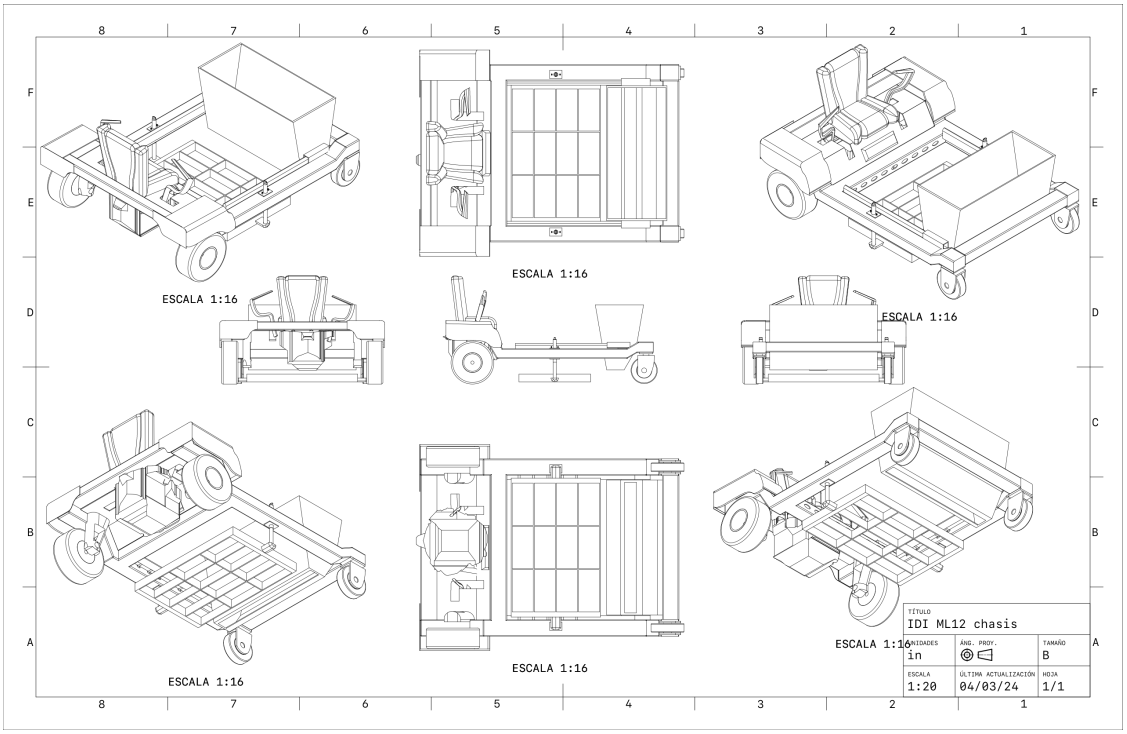

Figure 1. General SOLIDWORKS drawing sheet of the ML12 showing orthogonal and isometric views of the chassis, operator station, mold, hopper, wheels, and supporting subsystems. Drawing numbers and symbols are dimensional and view annotations; the Spanish label "ESCALA" denotes drawing scale. The annotations do not obscure the depicted components. The drawing is design documentation, not a photograph or as-built dimensional inspection.

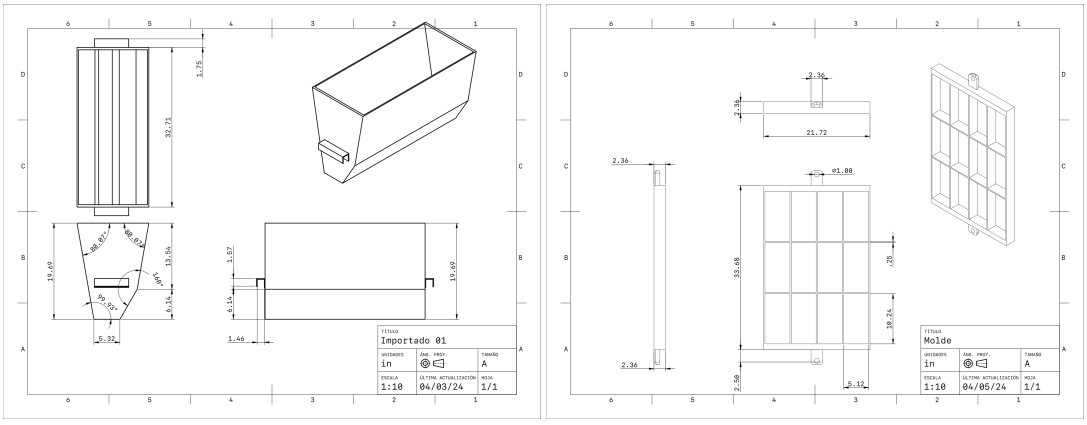

Figure 2. Dimensioned SOLIDWORKS drawings of the translating hopper/distributor (**left**) and 12-cavity mold (**right**). Drawing units are inches; the Spanish label "ESCALA" denotes drawing scale. The source-drawing notation ".25" is equivalent to 0.25 in.

The principal component functions are listed in Table 4, and the corresponding hydraulic/control and water-spray subsystems are shown in Figure 3.

2.3. Operating Sequence

Prepared clay mixture is supplied to the hopper by a tractor/front loader or equivalent external device. The design documentation specifies a minimum nominal operating crew of two persons; actual daily staffing, however, was not recorded in the operational dataset. The paired levers generate the four-stage sequence summarized in Table 5. Clay preparation, external loading, drying, and firing are outside the ML12 boundary.

Table 4. Principal ML12 components and functions.

No.	Component	Function in the Documented Concept
1	Paired control levers	Command hopper travel, discharge, stabilization/compaction and return
2	Operator seat	Provides the control position
3	Rear fenders	Separate the operator region from the rear wheels
4	Rear wheels	Support and translate the chassis
5	Two vertical actuators	Apply the documented vertical stabilization/compaction action
6	Front swivel casters	Provide front support and steering
7	Steel chassis	Supports the operator, actuators, rails and molding assembly
8	Side rails/spray region	Guide hopper travel and provide water-assisted cleaning access
9	12-cavity mold	Forms one batch of green bricks
10	Hopper/distributor	Receives and distributes prepared mixture over the mold

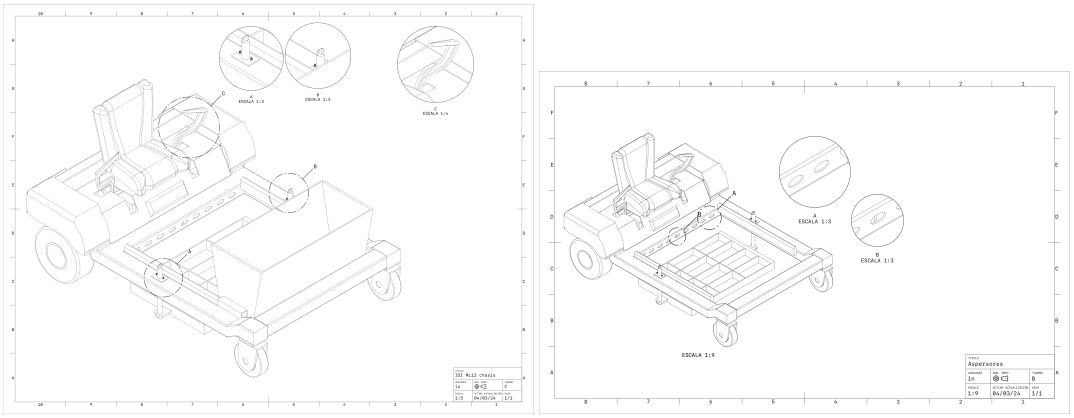

Figure 3. Subsystem drawings showing the hydraulic/control arrangement with enlarged connection points (**left**) and the water-spray/cleaning region adjacent to the mold and rails (**right**). Drawing numbers and symbols are dimensional and detail-callout annotations; the Spanish label "ESCALA" denotes drawing scale. Pressure, flow, cylinder, and water-consumption measurements were not part of the available dataset.

Table 5. Documented four-stage operating sequence.

Stage	Lever Positions	Documented Machine Action
1	Both levers backward	The hopper/distributor travels along the side rails and aligns with the mold
2	Left forward; right backward	The hopper discharges prepared mixture onto the 12-cavity mold
3	Left backward; right forward	The machine stabilizes and the material is compacted by vertical hydraulic action
4	Both levers forward	The hopper returns to the front position for reloading and the next cycle

The design documentation gives a nominal cycle of 12 bricks in 2 min, equivalent to 6 bricks/min or 2880 bricks over 480 uninterrupted minutes. This value is a design rate rather than sustained production. It excludes material delivery, repositioning, cleaning, interruptions, and other work activities. For cycle-time accounting, total shift time can be decomposed as

$$T_{\text{shift}} = T_{\text{load}} + T_{\text{hopper}} + T_{\text{distribution}} + T_{\text{compaction}} + T_{\text{return}} + T_{\text{cleaning}} + T_{\text{waiting/other}}. \quad (1)$$

Figure 4 maps these categories onto the documented cycle. Because component durations were not recorded, the diagram defines an analytical time-accounting framework without assigning estimated time fractions.

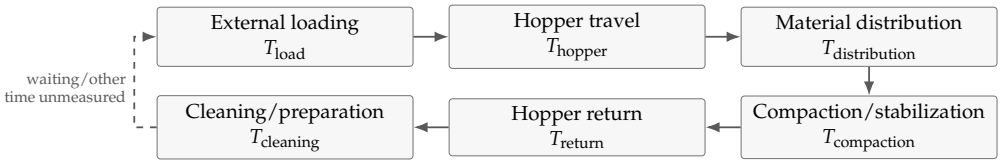

Figure 4. Qualitative time-accounting flow for the documented ML12 cycle. Box widths do not represent durations; cycle-level times were not recorded.

2.4. Functional Comparison with Recorded Prior Designs

The technical documentation references five earlier Mexican and international designs. Table 6 compares only the functions identifiable in those records and does not constitute a novelty opinion or legal determination. The comparison makes the design-selection rationale explicit: multi-cavity hydraulic molding was combined with a mobile chassis, seated local controls, and a translating distributor instead of a fixed production-line architecture.

Table 6. Functional comparison derived from the referenced design documentation.

Recorded Identifier	Mobile Platform	Multi-Cavity Mold	Translating Distributor	Primary Distinction Recorded
IMPI application 176338	Yes	Not established	Not established	Mobile molding concept
MX/u/2019/000582	Not established	No	No	Soil/material mixing equipment
MX/a/2015/002993	No	Yes	Not established	Fixed sustainable-brick molder
MX/u/2019/000659	No	Yes	Yes	Automated fixed machine
NL2002993C2	No	Yes	Yes	Fixed production-line architecture
ML12 (present design)	Yes	Yes (12)	Yes	Mobile chassis, seated paired-lever control and vertical hydraulic actuation

2.5. Retrospective Weighted Concept-Appraisal Analysis

To make the design rationale explicit, three architecture classes were scored retrospectively: a fixed automated line (Concept A), a mobile manual single-mold device (Concept B), and the ML12 configuration (Concept C). Six criteria were derived from the documented requirements. Scores range from 1 (poor satisfaction) to 5 (strong satisfaction), and the weighted score is

$$S_j = \sum_{i=1}^{6} w_i s_{ij}, \qquad \sum_{i=1}^{6} w_i = 1, \tag{2}$$

where w_i is the criterion weight and s_{ij} is the score of concept j on criterion i. Table 7 reports the complete calculation. The matrix reconstructs the design-selection logic retrospectively rather than representing a contemporaneous pre-design experiment. Because the weights and scores were assigned by the authors rather than elicited from manufacturers or operators, the analysis is interpreted only as an internal appraisal. Ranking sensitivity was examined through an equal-weight case and 12 one-at-a-time cases in which each baseline weight was decreased or increased by 25%, while the other five weights were rescaled proportionally to retain $\sum w_i = 1$. This procedure tests numerical dependence on the stated weights, not validity of the criteria, scores, or stakeholder preferences.

Table 7. Retrospective weighted concept-appraisal matrix for three architecture classes.

Criterion	Weight	A: Fixed Automated	B: Mobile Manual	C: ML12
Yard mobility	0.20	1	5	5
Multi-cavity batch capacity	0.20	5	1	5
Guided material distribution	0.15	5	2	4
Integrated seated control	0.15	1	3	5
Hydraulic compaction	0.15	5	1	4
Local simplicity/serviceability	0.15	1	5	4
Weighted score (1–5)	1.00	3.00	2.85	4.55

2.6. Comparative Production Records and Study Conditions

The operational dataset contains two consecutive observation periods of ten workdays each: traditional molding from 14–23 July 2024 and ML12-assisted molding from 14–23 August 2024. Gross output and working time were reported for each day. The original daily targets differed (800 traditional and 1500 ML12 bricks), so target-dependent "efficacy" percentages were not analyzed. The outcomes used here are gross green bricks/day and gross green bricks/h; neither is adjusted for rejection or product quality.

The study was observational, sequential, and non-randomized. Table 8 distinguishes the recorded conditions from those that cannot be reconstructed. Each day was treated as a descriptive operational replicate. Arithmetic mean, sample standard deviation (SD), and a descriptive 95% confidence interval (CI) of the mean were calculated using Student's t multiplier for nine degrees of freedom ($t_{0.975,9} = 2.262$). No inferential test of machine effect was performed because unmeasured differences between periods violate a defensible causal interpretation.

Table 8. Recorded and unrecorded conditions in the sequential comparison.

Factor	Traditional Period	ML12 Period
Dates	14–23 July 2024	14–23 August 2024
Observation days	10	10
Reported daily time	Available	Available
Gross daily output	Available	Available
Actual personnel and task allocation	Not recorded	Not recorded; nominal design crew is at least two
Operator identity/experience	Not recorded	Not recorded
Clay batch, formulation and moisture	Not controlled/reported	Not controlled/reported
Ambient temperature/weather	Not recorded	Not recorded
Energy and fuel	Not recorded	Not recorded
Reject count and quality outcomes	Not recorded	Not recorded

2.7. Scope of the Economic Assessment

The available economic information was insufficient for a reproducible cost comparison. The reported totals of 250 and 128 labor-hours could not be linked to daily staffing or task allocation, and the aggregate MXN 7316 materials/input value was not supported by a bill of materials or invoices. Depreciation, maintenance, useful life, energy use, and fabrication cost were also unquantified. Cost reduction, profit, and return metrics were

therefore outside the analytical scope. A complete cost model would require traceable inputs for fabrication or acquisition, staffing, energy, maintenance, tooling, useful life, financing, and quality-adjusted output.

2.8. Preliminary Linear-Static Frame Assessment

A bounded finite-element case was evaluated in SOLIDWORKS Simulation using a reconstructed tubular frame rather than the full machine assembly. The linear-elastic model used ASTM A500 Grade B steel ($E = 200{,}000$ MPa, $\nu = 0.30$, yield strength 250 MPa) and 50 mm × 30 mm × 2.5 mm rectangular hollow sections. This reconstructed section differs from the nominal 2 in × 4 in, 14-gauge section stated in the general design description; consequently, the analysis is treated as a preliminary frame case and not as an as-built verification.

A downward distributed load of 1000 N/m was applied over 1000 mm of the upper transverse member, giving a total vertical load of 1000 N. Both ends of the opposite transverse member were fixed in translation and rotation. Curvature-based second-order tetrahedral solid meshes were evaluated at nominal average element sizes of 8.0, 4.5, and 2.5 mm. The reported medium mesh contained 129,856 nodes and 78,421 elements, with a 1.5 mm minimum element size near joints and changes of section. Global equilibrium was checked by comparing the applied −1000 N vertical load with a +1000 N support reaction. The reported outputs were von Mises stress, resultant displacement, and elastic safety factor calculated relative to the stated yield strength. This load case does not represent the complete full-hopper, maximum-compaction, movement, or transport envelope, and it was not validated by strain or deflection measurements. Accordingly, it is used to document the requested stress field and numerical behavior, not to certify structural safety.

3. Results

3.1. Design Configuration and Nominal Cycle

The available design documentation identifies all ten principal components, a water-spray subsystem, dimensioned hopper and mold drawings, and a complete four-stage command sequence. The architecture combines mobility, batch molding, distribution, vertical actuation, and cleaning access in a single manually commanded platform. In the retrospective matrix, the ML12 scored 4.55/5, compared with 3.00 for the fixed automated class and 2.85 for the mobile manual class. Table 9 shows that the ML12 retained the highest internal score under equal weighting and all 12 one-at-a-time ±25% weight cases. This result indicates ranking stability within the examined assumptions, not stakeholder preference or experimentally validated superiority. The nominal rate is 6 bricks/min; the following operational results quantify sustained gross output rather than this idealized cycle rate.

Table 9. Internal sensitivity of concept scores to criterion weights. OAT denotes the 12 one-at-a-time cases.

Scenario	Fixed Automated (A)	Mobile Manual (B)	ML12 (C)	Highest
Baseline weights	3.00	2.85	4.55	C
Equal weights	3.00	2.83	4.50	C
OAT ± 25% range	2.88–3.13	2.72–2.98	4.52–4.58	C in all cases

3.2. Preliminary Finite-Element Results

Figure 5 shows the von Mises stress field for the reported medium mesh. The maximum stress was 112.3 MPa at the junction between the loaded transverse member and a lateral longitudinal member. Relative to the stated 250 MPa yield strength, the corre-

sponding minimum elastic safety factor was 2.23. Maximum resultant displacement was 1.82 mm and occurred near the center of the loaded member. The fine mesh returned 107.8 MPa, 1.71 mm, and a minimum safety factor of 2.32; the respective changes from the medium mesh were 4.0%, 6.0%, and 4.0% in magnitude. These results indicate numerical stabilization for this simplified load case, but they do not validate the actual service loads or the complete ML12 assembly.

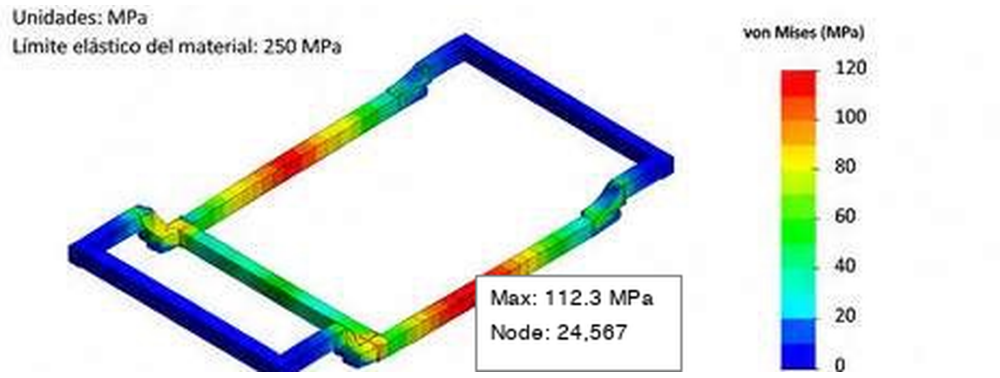

Figure 5. Von Mises stress distribution for the preliminary reconstructed-frame case on the reported medium mesh. A total downward load of 1.0 kN was distributed along the upper transverse member; the opposite transverse-member ends were fixed. The reported maximum is 112.3 MPa. The image is an author-generated SOLIDWORKS Simulation result and is not reproduced from a reference. The result applies only to this model and load case and does not constitute structural certification of the complete ML12.

3.3. Gross Daily Output and Throughput

Traditional molding averaged 720 green bricks/day (SD = 85.6; descriptive 95% CI: 658.7–781.3), whereas the ML12 period averaged 1495 green bricks/day (SD = 15.8; descriptive 95% CI: 1483.7–1506.3). The observed difference was 775 bricks/day, or 107.6% relative to the traditional mean. Figure 6 displays all daily observations.

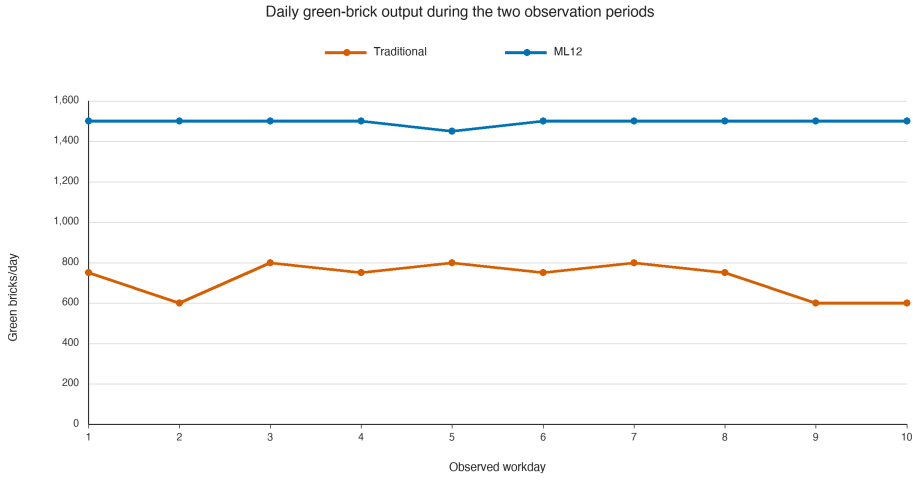

Figure 6. Gross daily green-brick output in the two sequential ten-day periods. The periods were not randomized or matched for personnel, operator, material, moisture, weather, energy, or rejection rate; the plot therefore supports descriptive comparison only.

Using the reported hours, traditional molding averaged 86.5 gross bricks/h (SD = 17.9; descriptive 95% CI: 73.7–99.4), compared with 186.9 gross bricks/h (SD = 2.0; descriptive 95% CI: 185.5–188.3) for the ML12 period. The ML12 daily mean corresponds to 51.9% of the uninterrupted nominal 2880-brick/8-h rate. Table 10 summarizes the observations.

Table 10. Descriptive operational results for the two observation periods.

Metric	Traditional	ML12	Observed Difference	Observed Change
Observation days	10	10	—	—
Mean gross output (bricks/day)	720.0	1495.0	+775.0	+107.6%
SD of gross output (bricks/day)	85.6	15.8	−69.8	—
Mean reported time (h/day)	8.6	8.0	−0.6	−7.0%
Mean gross throughput (bricks/h)	86.5	186.9	+100.3	+116.0%
Rated-output use	—	51.9%	—	—

The source records repeatedly cluster near their respective targets, particularly in the ML12 period. Without timestamped cycle logs or independent counting, this low variation cannot be interpreted as statistical process capability. More importantly, the gross counts cannot establish conforming output because no rejection or quality measurement was recorded.

3.4. Quality-Rejection Break-Even Sensitivity

Although rejection was not recorded, its effect on the comparison can be bounded algebraically. Let N_T and N_M be the observed traditional and ML12 gross daily means and r_T and r_M their unknown rejection fractions. Conforming output is $Q = N(1 - r)$. Setting $Q_T = Q_M$ gives the ML12 break-even rejection fraction

$$r_M^* = 1 - \frac{N_T(1 - r_T)}{N_M}. \quad (3)$$

Using $N_T = 720$ and $N_M = 1495$, Table 11 shows the threshold over a range of assumed traditional rejection fractions. With zero traditional rejects, the ML12 gross advantage would be fully offset only if ML12 rejection reached 51.8%. If traditional rejection were 10%, the corresponding ML12 break-even threshold would be 56.7%. These are sensitivity boundaries, not estimates of either actual rejection rate, and therefore do not establish product quality. This quantity-based boundary is not an economic break-even condition: rejection costs may be asymmetric between methods because discarded or reworked units can carry different material, labor, energy, drying, and firing burdens.

Table 11. ML12 rejection fraction at which conforming daily output equals the traditional method.

Assumed Traditional Rejection	Traditional Conforming Output (Bricks/Day)	ML12 Break-Even Rejection
0%	720	51.8%
5%	684	54.2%
10%	648	56.7%
15%	612	59.1%
20%	576	61.5%

4. Discussion

4.1. Design Contribution and Working Principle

The ML12 addresses a specific manufacturing context: a yard that needs higher batch capacity but cannot necessarily support a fixed automated line. The concept appraisal

follows a functional chain. Mobility led to a compact wheeled chassis; simultaneous production led to the 12-cavity mold; repeatable filling led to the guided translating hopper; vertical consolidation led to paired hydraulic actuators; water-assisted cleaning access was added near the rail/mold region; and localized manual command led to the seated two-lever station. The design drawings and four-stage sequence clarify how these subsystems cooperate. The weighted matrix adds analytical traceability to this rationale, and the weight sensitivity shows that the internal ranking is stable across the examined cases. Nevertheless, the retrospective scores remain author judgments and not statistically validated stakeholder preferences. This is a functional-architecture contribution, not an optimized structural or hydraulic design.

The design differs from automated machines reported in the literature [19,20] by prioritizing mobility and low control complexity. That choice may reduce installation demands, but it also retains dependence on an external loader and manual coordination. Other small mechanization studies confirm that staffing and downstream material handling can remain substantial even after molding is mechanized [18]. A prospective design-selection study should elicit weights from producers and operators and compare chassis, mold, hydraulic, feeding, and cleaning concepts using mass, stability, cycle time, energy, manufacturability, maintenance, quality variation, and operator exposure.

4.2. Interpretation of the Operational Difference

The ML12 period recorded more than twice the mean gross hourly throughput of the earlier traditional period. Batch size and mechanized distribution/compaction provide a plausible mechanism. Nevertheless, the sequential design leaves alternative explanations: different workers or staffing, learning, raw-material preparation, clay moisture, ambient conditions, and recording practice. The absence of these covariates means the 107.6% difference is an observed association, not an estimated causal machine effect.

The distinction between nominal and sustained output is also important. Observed ML12 output was 51.9% of its ideal uninterrupted cycle rate. This percentage is rate realization, not a measured fraction of productive time. The time-accounting framework in Figure 4 identifies hopper loading, travel, distribution, compaction, return, cleaning, waiting, and other activities, but no downtime study exists and no duration is assigned to any category. Cycle-level timestamps and a formal work-sampling or overall-equipment-effectiveness analysis would identify the limiting steps.

4.3. Product Quality and Ergonomic Evidence Gaps

Compaction conditions and mixture design can materially affect density, strength, acoustic behavior, thermal performance, and variability [10,11,13–15,21]. No dimensional deviation, moisture, green density, reject rate, fired compressive strength, or water absorption was recorded. The valid production outcome is therefore gross green-brick count, not saleable or conforming output. The break-even calculation shows how much rejection would be required to eliminate the observed gross-output advantage, but it cannot replace measurement. A confirmatory trial should sample each cavity and production day, measure dimensions under NMX-C-038-ONNCCE-2013, compressive strength under NMX-C-036-ONNCCE-2013, and water absorption under NMX-C-037-ONNCCE-2013, then assess compliance with NMX-C-404-ONNCCE-2012 or NMX-C-441-ONNCCE-2013 according to intended structural or non-structural use [25–29]. Test geometry and reporting should also follow established earth-block testing principles [12].

The seated station and hydraulic actuation were intended to reduce sustained stooping and manual mold handling, hazards described in the literature [6,7]. However, posture scoring, force measurement, discomfort surveys, physiological monitoring, and task-exposure

duration were not included in the operational dataset. The operator-centered configuration is therefore interpreted as a design intention rather than evidence of reduced fatigue or injury risk.

4.4. Economic and Structural Scope

The source cost data do not support a total-cost comparison because labor allocation, fabrication or purchase price, useful life, energy, maintenance, and quality losses were unquantified. No cost advantage is therefore reported. A reproducible analysis requires purchase or fabrication price, useful life, utilization, residual value, financing, energy or fuel, preventive and corrective maintenance, mold replacement, downtime, actual staffing, reject-adjusted output, and sensitivity or break-even analysis.

The preliminary finite-element case adds a documented von Mises field, displacement, elastic safety factor, reaction balance, and three-level mesh comparison for a reconstructed frame. It supersedes the earlier isolated 0.165 mm displacement value, which lacked a reproducible stress field and is therefore not used. The reported 112.3 MPa maximum and 2.23 minimum elastic safety factor apply only to the specified 1.0 kN static case. The reconstructed 50 mm $\times$ 30 mm $\times$ 2.5 mm section differs from the nominal chassis section in the design record, and the boundary conditions do not reproduce the complete machine supports or dynamic operation. Structural optimization and safety claims therefore still require a reconciled as-built geometry, verified material and weld properties, full-hopper, compaction, movement, and transport load cases, stability and fatigue checks, and experimental confirmation. Welding design and inspection should follow the applicable code [30]; Ref. [17] provides a relevant example of structural documentation for small brick machinery.

4.5. Process Boundary, Limitations, and Next Validation Stage

The ML12 addresses molding only. It does not change kiln technology, fuel, or combustion control, which dominate many energy and emission impacts in artisanal brick production [22,23]. Environmental benefit therefore remains untested; direct hydraulic energy and any effect on downstream drying/firing must first be measured.

The principal limitations are the small sequential dataset; absence of randomization, operator matching, and process controls; gross rather than quality-adjusted output; unknown actual staffing; lack of energy and downtime records; incomplete economic inputs; retrospective decision weights; and no validated full-machine structural or ergonomic measurements. A next-stage study should use a randomized crossover or blocked design across multiple operators and clay batches, preregister outcomes, control or record moisture and weather, log cycles and downtime, meter energy, measure all relevant staffing, test brick quality under the applicable Mexican standards, assess ergonomics, and complete validated structural and total-cost analyses. Reproducible full-machine finite-element assessment additionally requires reconciled native/as-built geometry, explicit service load and support definitions, material and contact properties, mesh convergence, and experimental validation. These steps would convert the present operational signal and preliminary frame result into evidence suitable for causal, safety, quality, and commercial claims.

5. Conclusions

The ML12 is a documented mobile molding architecture that integrates a dimensioned wheeled steel chassis, seated paired-lever station, translating hopper/distributor, 12-cavity mold, two vertical hydraulic actuators, and a water-spray cleaning subsystem in a four-stage cycle. A retrospective concept-appraisal matrix gave this combined architecture the highest internal score among the three examined classes; equal weights and

one-at-a-time ±25% variations preserved that ranking, while the author-assigned criteria and scores remain unvalidated stakeholder preferences. Existing sequential records show 1495 gross green bricks/day for the ML12 period versus 720 bricks/day for the earlier traditional period, and 186.9 versus 86.5 gross bricks/h. The quality sensitivity indicates a 51.8% ML12 break-even rejection rate when traditional rejection is assumed zero, but actual quality and the asymmetric economic consequences of rejection remain unknown. The descriptive output difference cannot be attributed exclusively to the machine because personnel, operators, clay, moisture, weather, energy, and rejection were not controlled. The qualitative time-accounting framework identifies the measurements required to explain the 51.9% nominal-rate realization without assigning unsupported durations. For the preliminary reconstructed-frame case, the reported medium-mesh maximum von Mises stress was 112.3 MPa, maximum displacement was 1.82 mm, and minimum elastic safety factor was 2.23; these results apply only to the specified 1.0 kN static load and do not certify the complete machine. Available economic inputs did not support a total-cost comparison. The present contribution is therefore a traceable functional-architecture analysis, exploratory operational assessment, and bounded preliminary frame analysis—not evidence of product quality, ergonomic improvement, full structural safety, environmental benefit, or profitability.

Supplementary Materials: The following supporting information can be downloaded at https://www.mdpi.com/article/10.3390/jmmp10090337/s1: Table S1, daily production and reported working time for the two ten-day periods (CSV); descriptive-statistics text file.

Author Contributions: Conceptualization, methodology, validation, formal analysis, investigation, resources, data curation, visualization, and writing—review and editing, all authors; writing—original draft preparation, L.A.F.C. and J.R.G.R.; supervision and project administration, J.R.G.R. All authors have read and agreed to the published version of the manuscript.

Funding: This research received no external funding.

Institutional Review Board Statement: Not applicable. The analyzed production records contain no identifiable human-subject data or clinical intervention.

Informed Consent Statement: Not applicable to the available aggregate production records.

Data Availability Statement: The daily production records and descriptive statistics supporting the reported results are included in the Supplementary Materials. Additional design drawings and the reconstructed finite-element model record are available from the corresponding author on reasonable request, subject to intellectual-property restrictions.

Acknowledgments: During the preparation of this manuscript, the authors used artificial intelligence tools to assist with language editing and manuscript preparation. The authors reviewed and edited all AI-assisted content and take full responsibility for the content of this publication.

Conflicts of Interest: L.A.F.C. is a co-inventor and co-holder of Mexican utility model MX 5827 B covering the machine described in this article and may have a commercial interest in its development. The remaining authors declare no conflicts of interest.

Abbreviations

The following abbreviations are used in this manuscript:

CAD	Computer-aided design
CI	Confidence interval
IMPI	Mexican Institute of Industrial Property
ML12	Mobile 12-cavity hydraulic clay-brick molding machine
SD	Sample standard deviation

References

1. Instituto Nacional de Ecología y Cambio Climático. *Ladrilleras Artesanales en México: Análisis de Mercado Sector Construcción. Proyecto Piloto Regional Basado en Portafolio de Políticas Públicas*; INECC: Mexico City, Mexico, 2016.
2. Rojas-Valencia, M.N.; Montiel-Reyes, M. Overview of the situation of artisanal brick manufacturers in Mexico and other Latin American countries. *Civ. Eng. Res. J.* **2018**, *3*, 555613. [CrossRef]
3. Saavedra-Robinson, L.A.; Quintero-López, M.C.; Pulido-Velasco, J.A. Responsabilidad social empresarial: Aproximación desde la ingeniería industrial al caso de las ladrilleras artesanales en zonas veredales del Valle del Cauca, Colombia. *Ing. Compet.* **2023**, *25*, e-22112282. [CrossRef]
4. Valdes, H.; Vilches, J.; Felmer, G.; Hurtado, M.; Figueroa, I. Artisan brick kilns: State-of-the-art and future trends. *Sustainability* **2020**, *12*, 7724. [CrossRef]
5. Ramos-Vargas, S.; Vázquez-Tinoco, J.C.; Serrano-Medrano, M.; Masera, O.; Ruiz-García, V.M. Participatory innovation for sustainable artisanal brick production in Mexico: A case study. *Sustain. Futur.* **2026**, *11*, 101697. [CrossRef]
6. Sain, M.K.; Meena, M. Identifying musculoskeletal issues and associated risk factors among clay brick kiln workers. *Ind. Health* **2019**, *57*, 381–391. [CrossRef] [PubMed]
7. Pratiwi, I.; Kalyana, V.S. Ergonomic risk evaluation of manual material handling in brick production. *J. Ilm. Tek. Ind.* **2022**, *21*, 113–124. [CrossRef]
8. Das, B. Improved work organization to increase the productivity in manual brick manufacturing unit of West Bengal, India. *Int. J. Ind. Ergon.* **2021**, *81*, 103040. [CrossRef]
9. Widodo, L.; Ariyanti, S.; Jason, A. Ergonomic intervention to improve the productivity of brick press tool in small and medium enterprise (SME) Akheng Kobar. *IOP Conf. Ser. Mater. Sci. Eng.* **2020**, *847*, 012057. [CrossRef]
10. Danso, H. Influence of compacting rate on the properties of compressed earth blocks. *Adv. Mater. Sci. Eng.* **2016**, *2016*, 8780368. [CrossRef]
11. Ben Mansour, M.; Ogam, E.; Jelidi, A.; Cherif, A.S.; Ben Jabrallah, S. Influence of compaction pressure on the mechanical and acoustic properties of compacted earth blocks: An inverse multi-parameter acoustic problem. *Appl. Acoust.* **2017**, *125*, 128–135. [CrossRef]
12. Morel, J.-C.; Pkla, A.; Walker, P. Compressive strength testing of compressed earth blocks. *Constr. Build. Mater.* **2007**, *21*, 303–309. [CrossRef]
13. Ben Mansour, M.; Jelidi, A.; Cherif, A.S.; Ben Jabrallah, S. Optimizing thermal and mechanical performance of compressed earth blocks (CEB). *Constr. Build. Mater.* **2016**, *104*, 44–51. [CrossRef]
14. Sitton, J.D.; Zeinali, Y.; Heidarian, W.H.; Story, B.A. Effect of mix design on compressed earth block strength. *Constr. Build. Mater.* **2018**, *158*, 124–131. [CrossRef]
15. Teixeira, E.R.; Machado, G.; de P. Junior, A.; Guarnier, C.; Fernandes, J.; Silva, S.M.; Mateus, R. Mechanical and thermal performance characterisation of compressed earth blocks. *Energies* **2020**, *13*, 2978. [CrossRef]
16. Sinha, S.; Sudarsan, J.S.; Abhyankar, A.A. Compressed stabilized earth blocks for sustainable building construction: A PRISMA-guided systematic review and TCCM analysis. *Buildings* **2026**, *16*, 1633. [CrossRef]
17. García-León, R.A.; Flórez-Solano, E.; Acosta-Pérez, M.A. Análisis estructural de una máquina prensadora para producción de ladrillo macizo para las pequeñas industrias artesanales de materiales cerámicos en Ocaña Norte de Santander y en la región. *Rev. Colomb. Tecnol. Av.* **2015**, *1*, 104–109. Available online: https://www.unipamplona.edu.co/unipamplona/portalIG/home_40/recursos/05_v25_30/revista_25/22072015/ta16-analisis_estructural.pdf (accessed on 25 August 2026).
18. Muhammad, M.; Arsyad, H.; Anzarih, A.S. Peningkatan produksi pengrajin batu bata melalui perbaikan proses pencetakan. *INTEK J. Penelit.* **2017**, *4*, 107–110. [CrossRef]
19. Yan, L.; Guan, H.; Nie, Y. Design and experimental research of a controllable-feeding hydraulic baking-free brick-making machine. *Chin. Hydraul. Pneum.* **2020**, *10*, 151–157. [CrossRef]
20. Premkumar, M.; Naga Rama Devi, G.; Sowmya, R. Design and implementation of brick making machine integrated with smart IIoT application. *Int. J. Comput. Digit. Syst.* **2020**, *9*, 471–481. [CrossRef]
21. Yu, H.; Ji, G.; Dai, Y.; Xu, B.; Xu, W.; Zeng, X.; Han, Z. A novel bionic design method for reducing forming resistance in manufacturing processes. *J. Manuf. Process.* **2025**, *149*, 383–398. [CrossRef]
22. Zavala, M.; Molina, L.T.; Maiz, P.; Monsivais, I.; Chow, J.C.; Watson, J.G.; Munguia, J.L.; Cardenas, B.; Fortner, E.C.; Herndon, S.C.; et al. Black carbon, organic carbon, and co-pollutant emissions and energy efficiency from artisanal brick production in Mexico. *Atmos. Chem. Phys.* **2018**, *18*, 6023–6037. [CrossRef]
23. López-Aguilar, H.A.; Huerta-Reynoso, E.A.; Gómez, J.A.; Duarte-Moller, J.A.; Pérez-Hernández, A. Life cycle assessment of a traditional brick manufacture improvement. *Rev. Int. Contam. Ambient.* **2019**, *35*, 195–206. [CrossRef]
24. Instituto Mexicano de la Propiedad Industrial. *Máquina de Fabricación de Ladrillos*; Mexican Utility Model MX 5827 B; Application MX/u/2024/000218; Filed 31 May 2024; Granted 19 June 2025; IMPI: Mexico City, Mexico, 2025.

25. Organismo Nacional de Normalización y Certificación de la Construcción y Edificación. *NMX-C-036-ONNCCE-2013: Industria de la Construcción—Mampostería—Resistencia a la Compresión de Bloques, Tabiques o Ladrillos y Tabicones y Adoquines—Método de Ensayo*; ONNCCE: Mexico City, Mexico, 2013.
26. Organismo Nacional de Normalización y Certificación de la Construcción y Edificación. *NMX-C-037-ONNCCE-2013: Industria de la Construcción—Mampostería—Determinación de la Absorción Total y la Absorción Inicial de Agua en Bloques, Tabiques o Ladrillos y Tabicones—Método de Ensayo*; ONNCCE: Mexico City, Mexico, 2013.
27. Organismo Nacional de Normalización y Certificación de la Construcción y Edificación. *NMX-C-038-ONNCCE-2013: Industria de la Construcción—Mampostería—Determinación de las Dimensiones de Bloques, Tabiques o Ladrillos y Tabicones—Método de Ensayo*; ONNCCE: Mexico City, Mexico, 2013.
28. Organismo Nacional de Normalización y Certificación de la Construcción y Edificación. *NMX-C-404-ONNCCE-2012: Industria de la Construcción—Mampostería—Bloques, Tabiques o Ladrillos y Tabicones para Uso Estructural—Especificaciones y Métodos de Ensayo*; ONNCCE: Mexico City, Mexico, 2012.
29. Organismo Nacional de Normalización y Certificación de la Construcción y Edificación. *NMX-C-441-ONNCCE-2013: Industria de la Construcción—Mampostería—Bloques, Tabiques o Ladrillos y Tabicones para Uso No Estructural—Especificaciones y Métodos de Ensayo*; ONNCCE: Mexico City, Mexico, 2013.
30. American Welding Society. *AWS D1.1/D1.1M:2020 Structural Welding Code—Steel*; AWS: Miami, FL, USA, 2020.

Disclaimer/Publisher's Note: The statements, opinions and data contained in all publications are solely those of the individual author(s) and contributor(s) and not of MDPI and/or the editor(s). MDPI and/or the editor(s) disclaim responsibility for any injury to people or property resulting from any ideas, methods, instructions or products referred to in the content.