proceedings

MDPI

Proceedings

Experimental Investigation of the Confined Behavior of Concrete under Shear Loading at High Strain Rates †

Reem Abdul-Rahman, Dominique Saletti and Pascal Forquin *

University Grenoble Alpes, CNRS, Grenoble INP, 3SR, 38000 Grenoble, France;
reem_abdulrahman@hotmail.com (R.A.-R.); dominique.saletti@3sr-grenoble.fr (D.S.)
* Correspondence: pascal.forquin@3sr-grenoble.fr
† Presented at the 18th International Conference on Experimental Mechanics (ICEM18), Brussels, Belgium, 1–5 July 2018.

Published: 29 June 2018

Abstract: A new experimental technique has been developed to investigate the confined shear behavior of concrete under dynamic conditions. The technique is based on the 'Punch through shear test' and consists in pre-stressing a concrete sample prior to testing it under shear. The pre-confinement is applied by means of a metallic cell instrumented with gages to register the stresses during the test; it consists in deforming the cell with a compressive load and then inserting the specimen into the cell. When the load is released, the cell applies a confinement to the sample. Two notches are performed from each side of the specimen and a displacement is applied to the central part in order to produce shear inside the vertical ligament. Dynamics tests are done with the Split Hopkinson Bar setup where a striker, an incident and two output bars are used. Two sets of specimens have been tested, saturated and dry concrete.

Keywords: shear strength; confinement cell; dynamic loading

1. Introduction

During seismic loading, penetration of projectiles into concrete, blasting and many other severe loadings, various localized effects including cratering, spalling and shearing are observed [1,2]. In the last decades, many experimental methods have been developed for studying the shear behavior and the mode II fracture toughness of concrete or rock materials. Among these different methods, the Punch through shear test allowed investigating the quasi static and dynamic confined and unconfined shear strength of rocks and concrete. The concept of this test is first to subject the specimen to a certain confinement then an axial load is applied to punch through the central portion of the core. Bakers et al. [3] conducted laboratory PTS tests and finite element modeling on three different types of rock subjected to a confining pressure up to 70 MPa to measure Mode II fracture toughness. Montenegro et al. [4] performed PTS tests on ordinary concrete, the authors observed an increase of dissipation of energy associated to mode II fracture in confined conditions (up to 10 MPa) and concluded that shear strength increases and dilatancy effect decreases with higher confinement. Forquin [5,6] studied the behavior of concrete under high strain rates; experiments were conducted with passive confinement cells and with radial notches to avoid self-confinement of the sample peripheral part. The cylindrical specimens were subjected to a dynamic loading through a Split Hopkinson Pressure Bar (SHPB) device. The author concluded that both types of concrete (dry and wet) have very small sensitivity to strain rates up to 100/s in mode II fracturing. The same technique was used to investigate the influence of strain rate on the confined shear strength of ultra-high performance concrete [7].

In the last technique, the level of confinement is not constant during the test and depends on the dilatant behavior of concrete. This is why a new technique based on pre-stressing concrete samples with a metallic ring is presented in the present work.

2. Materials and Methods

The composition of the R30A7 concrete and its mechanical properties are provided in Table 1. It has a mean strength of 30 MPa in compression after 28 days and a 7 cm slump.

Table 1. Composition and mechanical properties of R30A7.

Concrete Composition	kg/m³
Water	169
Sand	838
Coarse aggregate	1007
Cement	263
Mechanical properties	
Density (kg/m³)	2380
Compressive strength (MPa)	28.6
Porosity (%)	12
W/C ratio	0.64

The concrete sample tested is a parallelepiped which has a length of 70 mm, a height of 30 mm and a width of 30 mm. Two notches of 5 mm are drilled on the top and bottom faces which leaves a shear ligament of 20 mm height. The outer length of the top drill and the inner length of the bottom drill have the same dimensions so that the fracture surface remains as vertical as possible. The geometry of the concrete sample is shown in Figure 1.

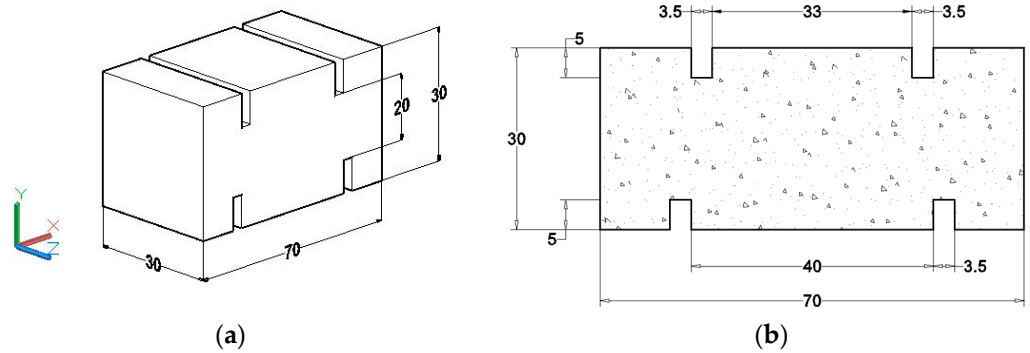

Figure 1. Geometry of the concrete sample used in PTS experiments (**a**) 3D view of the concrete specimen (**b**) Cross-section of the specimen (Dimensions in mm).

3. Experimental Procedure

The experimental setup developed for the pre-confinement is presented in Figure 2. It consists in deforming elastically an instrumented metallic ring and inserting the concrete specimen inside the ring. When the load is released, confinement stresses are transferred to the ligament of the sample (in the X direction). The gap between the ring and the concrete sample is filled with steel sheets before the unloading stage. Without these sheets, the ring goes back to its initial position without any confinement in the concrete sample. By varying the number of steel sheets, different levels of confinement can be obtained before applying the shear loading.

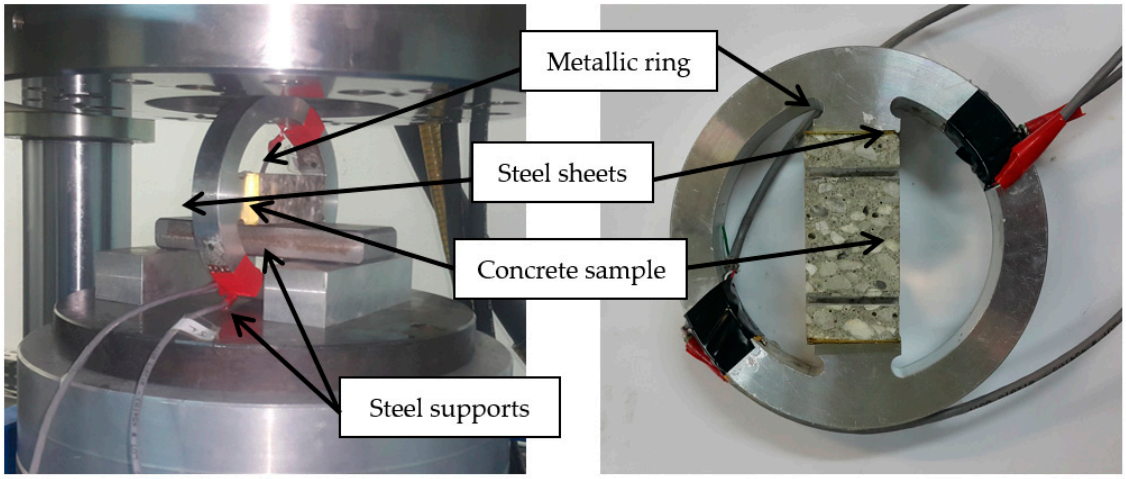

Figure 2. (**a**) Setup of confinement procedure (**b**) A concrete sample confined with the metallic ring.

After applying the confinement, a dynamic loading is applied through a Split Hopkinson bar device composed of a striker bar, an incident bar and two output bars (Figure 3). The loading is applied to the central part of the specimen in the Y-direction (Figure 1a). A pulse shaper technique has been used in order to increase the rising time of the pulse and then improve the mechanical balance of the sample. The pulse shaper is a deformable thin ring made of lead and placed on the impact surface of the input bar. During the dynamic testing, the striker impacts the pulse shaper which is deformed plastically, allowing generating a smoother pulse with a longer rising time in comparison with the case where no pulse shaper is used. The strain gages measurements on the input and output bars provide the input and output forces. The shear stress is then deduced by averaging these two forces in the shear surface.

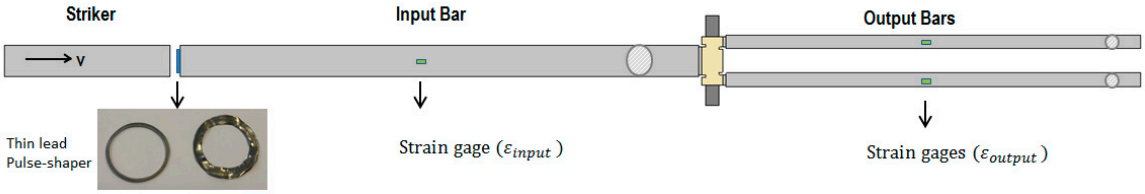

Figure 3. Schematic representation of the SPHB setup for dynamic shear testing.

4. Results

Two sets of specimens have been tested, saturated and dry specimens. Saturated specimens were kept in water and dry specimens were dried in the oven at 60 °C until their mass stabilization. Experimental results obtained with both sets are reported on Figure 4. The same level of confinement stress was registered for both tests; it is almost constant until the peak (around 17 MPa) and then starts to increase because of the dilatant behavior of concrete. The maximum shear stress reached 37 MPa in dry specimens while it reached 30 MPa in wet specimens. The strain rate is calculated from the elastic shear deformation which is the slope of the shear stress curve divided by the concrete shear modulus. It is reported equal to 46/s with the dry specimen and 27/s with the wet one.

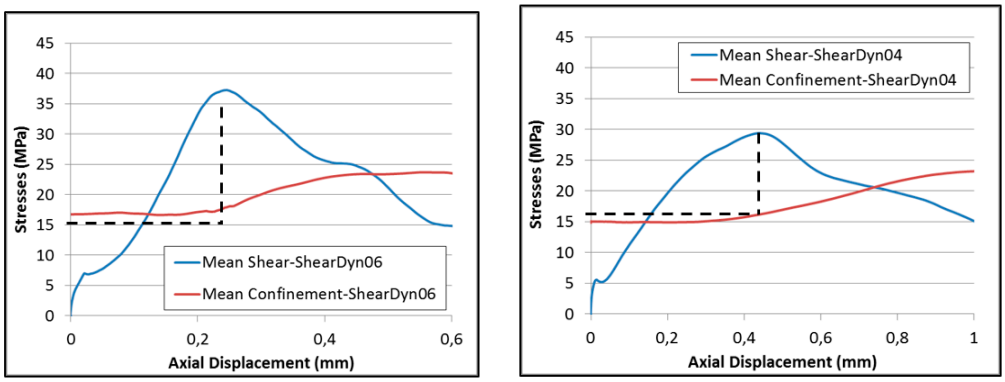

Figure 4. (**a**) Results of dynamic shear tests performed with an aluminium ring on (**a**) dry and (**b**) wet R30A7 concrete specimens.

5. Conclusions

A novel experimental method has been developed to study the shear behavior of concrete subjected to confinement under high strain-rates. A pre-stressed cell was used in order to apply a pre-confinement to concrete sample prior to testing it under dynamic shearing. The influence of moisture content was studied by testing two different sets of concrete, dry and saturated specimens. It was deduced that the shear strength of dry samples is higher than that of the saturated ones.

Acknowledgments: This work has been sponsored by CEA-Gramat Research center (France). The support of this organization is gratefully acknowledged by the authors.

References

1. Zukas, J. *Penetration and Perforation of Solids. Impact Dynamics*; Krieger Publishing Co.: Malabar, FL, USA, 1992.
2. Li, Q.M.; Reid, S.R.; Wen, H.M.; Telford, A.R. Local impact effects of hard missiles on concrete targets. *Int. J. Fract.* **2005**, *32*, 224–284.
3. Backers, T.; Stephansson, O.; Rybacki, E. Rock fracture toughness testing in mode II—Punch-through shear test. *Int. J. Rock Mech. Min. Sci.* **2002**, *39*, 755–769.
4. Montenegro, O.; Sfer, D.; Lopez, C.M.; Carol, I. Experimental tests and numerical modeling to identify the asymptotic shear-compression mode IIa of concrete fracture. In Proceedings of the VIII International Conference on Fracture Mechanics of Concrete and Concrete Structures (Framcos 8), Toledo, Spain, 10–14 March 2013; pp. 271–277.
5. Forquin, P. Influence of Free Water and Strain-Rate on the Shear Behavior of Concrete. *Appl. Mech. Mater.* **2011**, *82*, 148–153.
6. Forquin, P.; Sallier, L. A Testing Technique to Characterize the Shear Behavior of Concrete at High Strain-Rates. In *Dynamic Behavior of Materials*; Chalivendra, V., Song, B., Casem, D., Eds.; Conference Proceedings of the Society for Experimental Mechanics Series; Springer: New York, NY, USA, 2013; Volume 1.
7. Lukić, B.; Forquin, P. Experimental characterization of the punch through shear strength of an ultra-high performance concrete. *Int. J. Impact Eng.* **2016**, *91*, 34–45, doi:10.1016/j.ijimpeng.2015.12.009.

© 2018 by the authors. Licensee MDPI, Basel, Switzerland. This article is an open access article distributed under the terms and conditions of the Creative Commons Attribution (CC BY) license (http://creativecommons.org/licenses/by/4.0/).