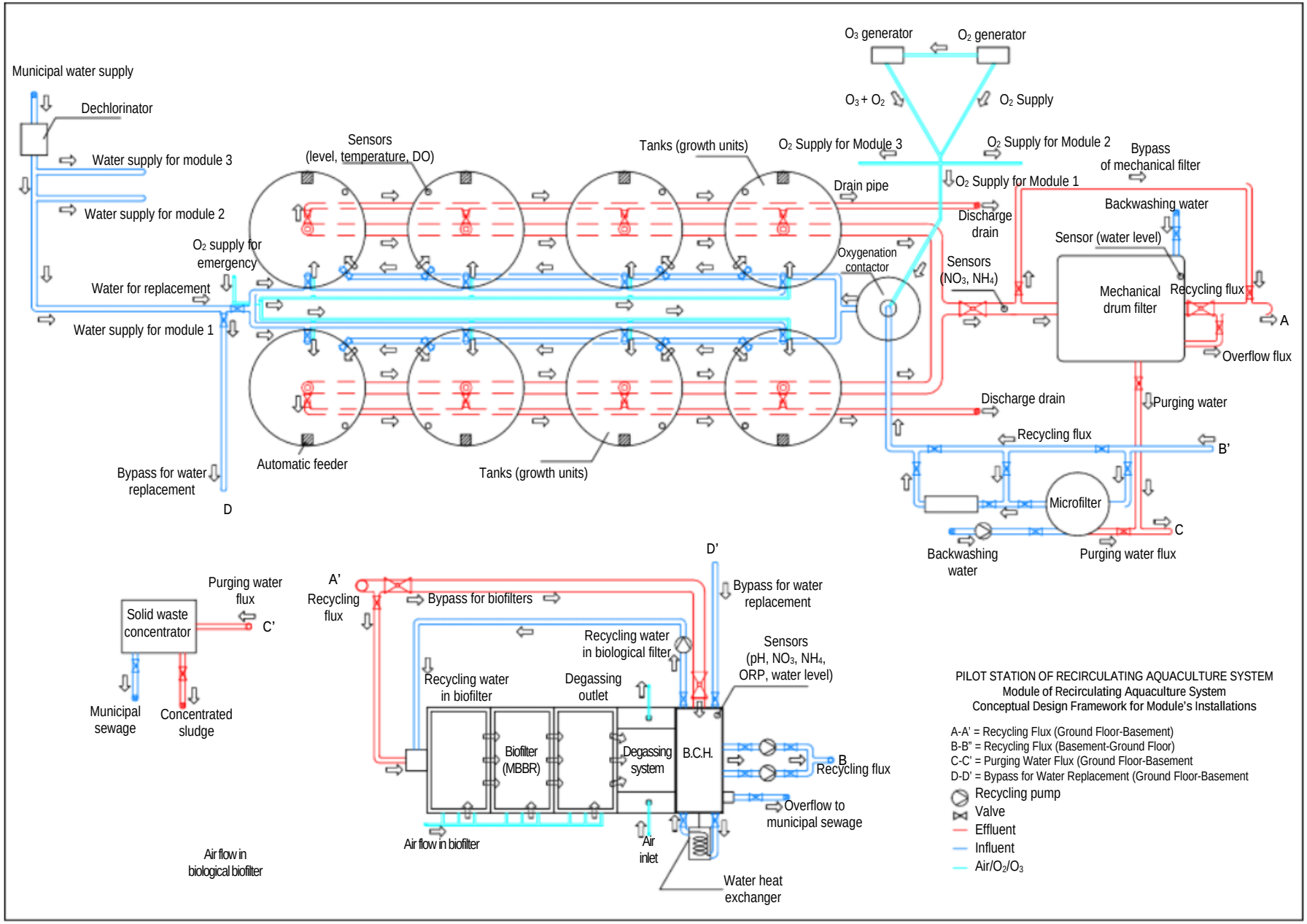
Municipal water supply
Dechlorinator
Water supply for module 3
Water supply for module 2
Water supply for module 1
Water for replacement
O2 supply for emergency
Bypass for water replacement
D
Sensors (level, temperature, DO)
Automatic feeder
Tanks (growth units)
Tanks (growth units)
Drain pipe
Oxygenation contactor
O3 generator
O2 generator
O3 + O2
O2 Supply
O2 Supply for Module 3
O2 Supply for Module 2
O2 Supply for Module 1
Discharge drain
Sensors (NO3, NH4)
Bypass of mechanical filter
Backwashing water
Sensor (water level)
Mechanical drum filter
Recycling flux
A
Overflow flux
Discharge drain
Purging water
Recycling flux
B'
Microfilter
C
Backwashing water
Purging water flux
Solid waste concentrator
Purging water flux
C'
Municipal sewage
Concentrated sludge
A'
Recycling flux
Bypass for biofilters
D'
Bypass for water replacement
Recycling water in biological filter
Sensors (pH, NO3, NH4, ORP, water level)
Recycling water in biofilter
Degassing outlet
Biofilter (MBBR)
Degassing system
B.C.H.
B
Recycling flux
Overflow to municipal sewage
Air flow in biofilter
Air inlet
Water heat exchanger
Air flow in biological biofilter
PILOT STATION OF RECIRCULATING AQUACULTURE SYSTEM
Module of Recirculating Aquaculture System
Conceptual Design Framework for Module's Installations
A-A' = Recycling Flux (Ground Floor-Basement)
B-B" = Recycling Flux (Basement-Ground Floor)
C-C' = Purging Water Flux (Ground Floor-Basement
D-D' = Bypass for Water Replacement (Ground Floor-Basement
Recycling pump
Valve
Effluent
Influent
Air/O2/O3