processes

MDPI

Article

Magnetohydrodynamic Modeling of Arc-Induced Thermal Response and Insulation Ignition Risk in Low-Voltage AC Short-Circuit Faults

Shuchao Li [1,2], Haiyue Zhou [3], Xin Wang [1,2], Yuling Wang [1,2], Xian Wu [1,2], Jingjing Li [1,2], Wentao Jiang [1,4], Longnv Li [3] and Gaojia Zhu [1,3,*]

[1] Key Laboratory of Fire Protection Technology for Industry and Public Building, Ministry of Emergency Management, Tianjin 300381, China; jiangwentao@tiangong.edu.cn (W.J.)
[2] Tianjin Fire Science and Technology Research Institute of MEM, Tianjin 300381, China
[3] School of Electrical Engineering, Tiangong University, Tianjin 300387, China; lilongnv@tiangong.edu.cn (L.L.)
[4] School of Control Science and Engineering, Tiangong University, Tianjin 300387, China
* Correspondence: zhugaojia@tiangong.edu.cn; Tel.: +86-17726034976

Abstract

Low-voltage (LV) alternating current (AC) power distribution systems are widely used, where phase-to-neutral short-circuit faults are a major cause of electrically induced fires. Prior to a circuit breaker interruption, arc discharges may develop between conductors, leading to intense localized heating of the cable insulation and a potential ignition risk. In this study, a magnetohydrodynamic (MHD) model of 220 V AC short-circuit arcs is established to investigate the coupled electrical and thermal behavior of arc discharges and their induced heating effects on conductor insulation. The transient temperature distribution in the arc region and insulation layer is numerically analyzed under different tripping currents and tripping times, and insulation ignition risk is evaluated based on characteristic thermal thresholds. To validate the simulations, a controllable 220 V AC short-circuit experimental platform is developed using a motor-driven wire contact mechanism. Circuit breakers rated at 20 A, 32 A, and 63 A are tested, and short-circuit current and voltage waveforms are recorded. The results indicate that insulation ignition risk is jointly governed by short-circuit current magnitude and breaker tripping time. Delayed interruption significantly increases insulation temperature and ignition susceptibility, whereas rapid interruption effectively suppresses arc-induced heating.

Keywords: low-voltage AC system; short-circuit arc; magnetohydrodynamic (MHD) modeling; circuit breaker tripping characteristics; ignition risk; thermal behavior

Check for updates

Academic Editor: Massimo Caruso

Received: 18 March 2026
Revised: 23 April 2026
Accepted: 30 April 2026
Published: 6 May 2026

Copyright: © 2026 by the authors. Licensee MDPI, Basel, Switzerland. This article is an open access article distributed under the terms and conditions of the Creative Commons Attribution (CC BY) license.

1. Introduction

Low-voltage (LV) alternating current (AC) power distribution systems are extensively deployed in residential and industrial applications. Owing to aging insulation, loose connections, and mechanical damage to conductors, phase-to-neutral short-circuit faults occur frequently and have been recognized as one of the primary causes of electrically induced fires [1–3]. Under such fault conditions, intense arc discharges may be generated prior to circuit interruption, producing extremely high local temperatures and creating a hazardous thermal environment with a high potential for ignition of nearby combustible materials [4,5].

In LV systems, electrical fire protection mainly relies on overcurrent and short-circuit protection provided by circuit breakers. However, circuit interruption is not instantaneous. During the tripping delay, short-circuit arcs can persist and continuously impose severe thermal exposure on the surrounding region, significantly increasing the ignition risk [6,7]. Previous studies have shown that arc-related fire hazards are closely associated with the evolution of arc temperature and energy dissipation, both of which are influenced by short-circuit characteristics and the dynamic behavior of protective devices [5,8,9]. Nevertheless, under LV AC conditions, the combined effects of short-circuit current magnitude and circuit breaker tripping characteristics on arc-induced thermal hazards and ignition risk are not fully clarified.

From a physical perspective, short-circuit arcs are high-temperature plasma phenomena involving complex interactions among electromagnetic fields, plasma flow, and heat transfer processes [10,11]. Due to the extremely high temperature, rapid temporal evolution, and limited accessibility of the arc region, experimental measurements alone are often insufficient to capture the transient thermal characteristics of short-circuit arcs. Numerical modeling based on magnetohydrodynamic (MHD) theory provides an effective approach for analyzing arc plasma behavior and has been widely applied to switching arcs, fault arcs, and arc-induced heating phenomena [11–13].

Recent MHD-based studies have shown that delayed or non-synchronous interruptions can significantly impact arc plasma characteristics and thermal behavior. Huang et al. [14] investigated arc and magnetic field parameters in a double-break DC vacuum circuit breaker under delayed breaking conditions using an MHD model. Results show that delayed interruption causes higher arc temperatures, enlarged arc dimensions, and slower energy dissipation. Similar influences of interruption dynamics on arc behavior have also been reported for switching arcs [15–17].

To address low-voltage short-circuit arc phenomena and their ignition risks, extensive research has been conducted through experimental studies, simulations, and integrated approaches. Gammon and Matthews [18] developed an empirical model for transient arc faults based on extensive experimental data, providing a foundation for arc energy calculations. Land et al. [19] analyzed case studies to examine how system grounding configurations and busbar insulation affect arc flash hazards and ignition risks. Rojewska et al. [20] conducted experimental observations of low-voltage single-phase short-circuit arcs, recording critical parameters including voltage, current, and heat release rates. For DC systems, Li et al. [21] employed MHD simulation methods to analyze arc energy release characteristics under live-line working conditions. Sheng et al. [22] further established an ignition risk experimental platform and MHD simulation model for low-voltage AC series fault arcs, validating the reliability of simulation results in temperature prediction. Wang et al. [23] focused on breaking characteristics under low-voltage circuit breaker rated currents, developing a field-circuit coupled MHD model to analyze external circuit influences on arc behavior.

To better delineate the contributions of this study, Table 1 summarizes the differences among the aforementioned representative studies across multiple key technical dimensions, including research methodologies, voltage types, arc types, consideration of circuit breaker interruption characteristics, and focus on thermal response and ignition risk.

However, current studies are mainly focused on high-current DC vacuum arcs in sealed interrupters [14–16]. In contrast, LV AC short-circuit arcs develop in open air, where arc behavior, boundary conditions, and ignition mechanisms differ fundamentally from those in vacuum environments [4,5,10]. Moreover, most existing studies investigate arc characteristics under fixed electrical conditions, while the coupling between circuit breaker

tripping characteristics, arc duration, and arc-induced thermal hazards in practical LV AC systems has not been systematically examined [7–9,24].

Table 1. Comparative analysis of related research works, where "√" means true and "×" means false.

Document	Method	Voltage Type	Arc Type	Considers Breaker Characteristics	Focuses on Thermal Response	Focuses on Ignition Risk
This article	MHD simulation + experiment	low-voltage AC	phase-to-neutral short-circuit arc	√	√	√
Huang et al. [14]	MHD simulation	DC	vacuum circuit breaker arc	×	√	×
Gammon and Matthews [18]	experiment + experience model	low-voltage AC	fault arc	×	×	×
Land et al. [19]	experiment + case study	low-voltage AC	arc flash	×	×	√
Rojewska et al. [20]	experiment	low-voltage AC	single-phase short-circuit arc	×	×	×
Li et al. [21]	MHD simulation	low-voltage DC	live working arc	×	√	×
Sheng et al. [22]	MHD simulation + experiment	low-voltage AC	series fault arc	×	√	√
Wang et al. [23]	simulation + experiment	low-voltage AC	circuit breaker breaking arc	√	√	×

In practical LV power distribution systems, circuit breakers with different rated currents exhibit distinct tripping thresholds and interruption times, resulting in substantial differences in arc duration and thermal exposure under identical short-circuit conditions [24,25]. Therefore, arc plasma modeling that accounts for circuit breaker tripping characteristics is required for accurate assessment of short-circuit arc ignition risk in practical LV power distribution systems.

In this work, a magnetohydrodynamic model of 220 V AC short-circuit arcs is established to investigate arc-induced temperature evolution under different tripping currents and tripping times. A controllable 220 V AC short-circuit experimental platform is developed to validate the numerical results using circuit breakers rated at 20 A, 32 A, and 63 A. Through combined numerical and experimental analysis, the influence of circuit breaker tripping characteristics on arc-induced thermal hazards and ignition risk is systematically examined.

Compared with previous studies, this research offers novel analytical perspectives and quantitative results in two key aspects. First, we developed a transient temperature evolution model, moving beyond traditional total arc energy calculation methods by establishing a dedicated transient arc temperature model. Comprehensive temperature distribution data were obtained through magnetohydrodynamic simulations. Second, we quantitatively analyzed the arc cumulative energy and peak temperature corresponding to different circuit breaker interruption durations. The impact of interruption duration on arc cumulative energy was significantly greater than its effect on instantaneous peak temperature, indicating that the fire risk induced by arcs is primarily governed by cumulative energy rather than transient high temperatures. Based on these findings, we recommend using arc cumulative energy as the primary indicator for ignition risk assessment of insulating materials. This quantitative relationship provides direct guidance for low-voltage circuit breaker selection and protection parameter configuration.

2. Magnetohydrodynamic (MHD) Modeling of 220 V AC Shrot-Circuit Arcs

2.1. Physical Characteristics of LV AC Short-Circuit Arcs

A short-circuit arc typically consists of three regions: the cathode region, the arc column region, and the anode region. The arc column constitutes the main body of the arc and exhibits quasi-neutral plasma characteristics, with the highest temperature occurring near the arc core due to intense Joule heating. In contrast, the near-electrode regions generally exhibit lower temperatures owing to efficient heat conduction into the metallic conductors, which strongly influences the spatial temperature distribution of the arc [10–13]. In LV AC systems, arc behavior is further influenced by the alternating current waveform. Periodic current zero-crossings lead to partial arc extinction and re-ignition within each cycle, resulting in pronounced temporal variations in arc temperature, electrical conductivity, and plasma diameter. When circuit breaker interruption is delayed, arc energy continues to accumulate over successive cycles, leading to elevated plasma temperature, arc column expansion, and enhanced heat transfer to surrounding air. Previous studies have shown that such delayed or non-synchronous interruption can significantly intensify arc thermal effects and increase the probability of re-ignition and ignition hazards [14–17]. These characteristics indicate that arc energy evolution and thermal hazard are strongly coupled with short-circuit current magnitude and circuit breaker tripping time.

2.2. Governing Equations

From a macroscopic perspective, LV AC short-circuit arcs exhibit fluid-like behavior and can be described using an MHD formulation. In the MHD framework, the arc plasma is treated as a conductive fluid in local thermodynamic equilibrium, and its behavior is governed by the coupled conservation equations of fluidic characteristics, while electromagnetic effects are incorporated through Ohm's law and the Lorentz force.

A two-dimensional axisymmetric coordinate system (r-z) is adopted to represent the arc region. The mass conservation equation describing plasma continuity is expressed as [12–14]:

$$\frac{\partial \rho}{\partial t} + \frac{\partial (r\rho v_{\mathrm{r}})}{r\partial r} + \frac{\partial (\rho v_{\mathrm{z}})}{\partial z} = 0 \tag{1}$$

where ρ is the plasma density, and v_{r} and v_{z} are the radial and axial velocity components, respectively. The momentum conservation equations in the radial and axial directions can be formulated as [12–14]:

$$\begin{aligned} &\frac{\partial (\rho v_{\mathrm{r}})}{\partial t} + \frac{\partial (r\rho v_{\mathrm{r}}^2)}{r\partial r} + \frac{\partial (\rho v_{\mathrm{r}} v_{\mathrm{z}})}{\partial z} = -\frac{\partial P}{\partial r} - j_{\mathrm{z}} B_{\theta} \\ &+ \frac{\partial}{r\partial r}\left(2r\eta \frac{\partial v_{\mathrm{r}}}{\partial r}\right) + \frac{\partial}{\partial z}\left[\eta\left(\frac{\partial v_{\mathrm{r}}}{\partial z} + \frac{\partial v_{\mathrm{z}}}{\partial r}\right)\right] - 2\eta \frac{v_{\mathrm{r}}}{r^2} \end{aligned} \tag{2}$$

$$\begin{aligned} &\frac{\partial (\rho v_{\mathrm{z}})}{\partial t} + \frac{\partial (r\rho v_{\mathrm{r}} v_{\mathrm{z}})}{r\partial r} + \frac{\partial (\rho v_{\mathrm{z}}^2)}{\partial z} = -\frac{\partial P}{\partial z} + j_{\mathrm{r}} B_{\theta} \\ &+ \frac{\partial}{\partial z}\left(2\eta \partial v_{\mathrm{r}}/\partial z\right) + \frac{\partial}{r\partial r}\left[r\eta\left(\partial v_{\mathrm{r}}/\partial z + \partial v_{\mathrm{z}}/\partial r\right)\right] \end{aligned} \tag{3}$$

where P denotes the plasma pressure, η is the dynamic viscosity, j_{r} and j_{z} are the radial and axial current density components, respectively, and B_{θ} is the azimuthal magnetic flux density. The terms involving jB_{θ} represent the Lorentz force acting on the arc plasma.

The thermal behavior of the arc plasma is governed by the energy conservation equation [5],

$$\begin{aligned} &\frac{\partial (\rho c_{\mathrm{P}} T)}{\partial t} + \frac{\partial (r\rho c_{\mathrm{P}} v_{\mathrm{r}} T)}{r\partial r} + \frac{\partial (\rho c_{\mathrm{P}} v_{\mathrm{z}} T)}{\partial z} = \frac{j_{\mathrm{r}}^2 + j_{\mathrm{z}}^2}{\sigma} + Q_{\mathrm{rad}} \\ &+ \frac{\partial}{r\partial r}\left(rk\frac{\partial T}{\partial r}\right) + \frac{\partial}{\partial z}\left(k\frac{\partial T}{\partial z}\right) \end{aligned} \tag{4}$$

where T is the plasma temperature, c_{P} is the specific heat capacity at constant pressure, k is the thermal conductivity, Q_{rad} is the power dissipated by radiation, and σ is the electrical conductivity. The first term on the right-hand side represents Joule heating, which serves

as the dominant energy source sustaining the arc, while the remaining terms describe heat conduction within the plasma and heat transfer to the surrounding air. Radiative heat transfer is neglected, as thermal conduction and convection dominate energy dissipation in LV air arcs.

Thermophysical properties of the arc plasma, including density, electrical conductivity, thermal conductivity, specific heat capacity, and viscosity, are treated as temperature-dependent functions to capture the strong nonlinearity of plasma behavior under short-circuit conditions. Together, (1)–(4) constitute a closed set of coupled nonlinear equations describing the fluid flow, electromagnetic interaction, and thermal evolution of LV AC short-circuit arcs. These equations are solved numerically to obtain the spatial–temporal evolution of arc temperature, velocity field, current density, and energy dissipation under different short-circuit current magnitudes and circuit breaker tripping times.

2.3. Solution Domain and Calculation Settings

The solution domain represents a typical phase-neutral short-circuit configuration in ambient air, as shown in Figure 1. A two-dimensional axisymmetric geometry is employed to capture the essential characteristics of the arc plasma while maintaining computational efficiency. The initial temperature of the entire domain is set to the ambient temperature prior to fault initiation. Due to the high temperature of the arcs, their thermal radiation effect cannot be neglected and is accounted for in the numerical investigations through thermal radiation boundaries.

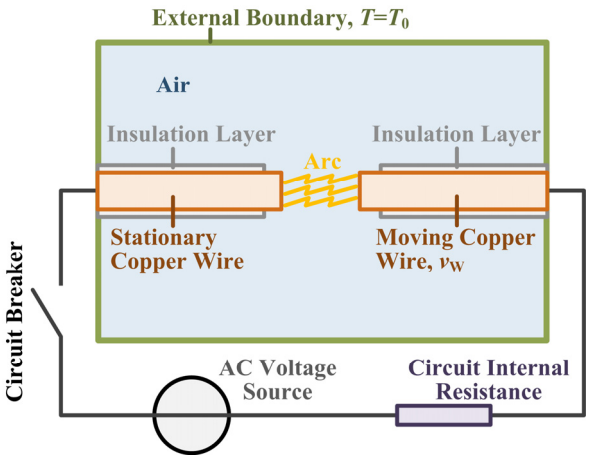

Figure 1. Solution domain and simulation settings.

The electric potential is applied to reproduce a 220 V alternating current short-circuit condition. One electrode is specified with a time-dependent AC voltage, while the opposite electrode is grounded. Circuit breaker interruption is modeled by truncating the applied voltage at prescribed tripping times, thereby simulating different tripping characteristics corresponding to circuit breakers with various rated currents.

By systematically varying the short-circuit current magnitude and the imposed tripping time, the simulation framework enables quantitative analysis of arc temperature evolution, arc energy accumulation, and spatial–temporal distribution of the thermal field. These results provide the theoretical basis for the experimental validation and ignition risk assessment presented in the subsequent section.

2.4. Numerical Investigation and Transient Arc Response

The coupled magnetohydrodynamic governing equations described in Section B are solved numerically using a finite-element-based framework under axisymmetric conditions. All governing equations, including continuity, momentum, energy, and electromagnetic

field equations, are fully coupled to capture the strong interaction among plasma flow, heat transfer, and electromagnetic effects during the evolution of LV AC short-circuit arcs.

Thermophysical properties of the arc plasma, including density, electrical conductivity, thermal conductivity, specific heat capacity, and dynamic viscosity, are treated as temperature-dependent functions. This treatment is essential for accurately representing the highly nonlinear behavior of air plasma under arc conditions, where temperature variations span several orders of magnitude. The temperature-dependent material properties are updated iteratively during the transient solution process.

A transient time-stepping scheme is employed to resolve the rapid evolution of arc plasma from ignition to circuit breaker interruption. At each time step, the electric potential field is first solved to obtain the current density distribution. The self-induced magnetic field and Lorentz force are then evaluated, followed by sequential solution of the momentum and energy equations to update the velocity and temperature fields until convergence is achieved.

Figure 2 illustrates the temporal evolution of arc temperature distributions under different wire separation distances. As the separation distance increases, the arc column elongates and the high-temperature core region expands, leading to a longer arc duration and increased thermal diffusion into the surrounding air. The results indicate that wire separation distance significantly influences arc stability and temperature evolution, thereby affecting arc energy accumulation prior to interruption.

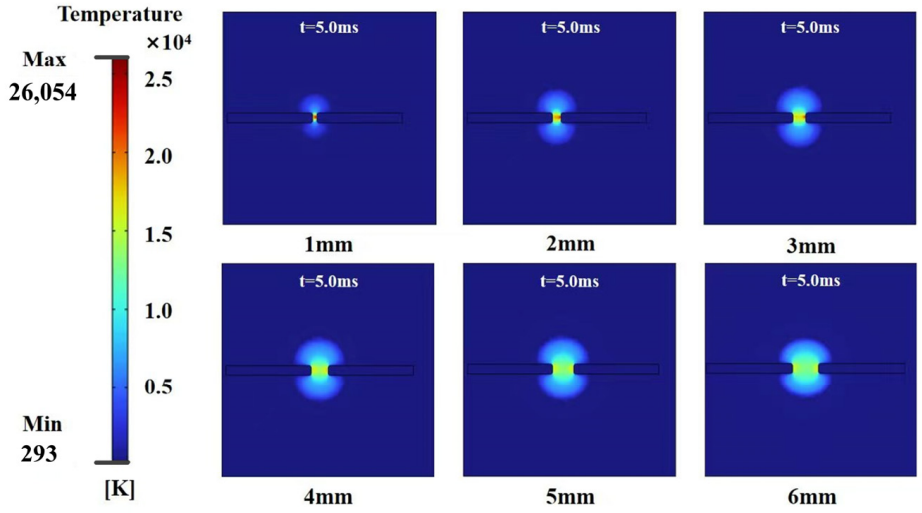

Figure 2. Arc temperature versus wire distance.

Figure 3 presents the corresponding voltage and current waveforms. Before the circuit breaker trips, the short-circuit current remains at a high level and sustains intense arc discharge. Once tripping occurs, the current rapidly decays and the arc temperature decreases accordingly. The delay between fault initiation and circuit breaker interruption directly determines the duration of energy injection into the arc plasma, highlighting the critical role of tripping characteristics in arc thermal behavior.

Grid independence and time-step sensitivity analyses are conducted to ensure that the numerical results are not affected by spatial discretization or temporal resolution. The adopted numerical strategy enables stable and accurate simulation of arc plasma evolution under various short-circuit and protection scenarios.

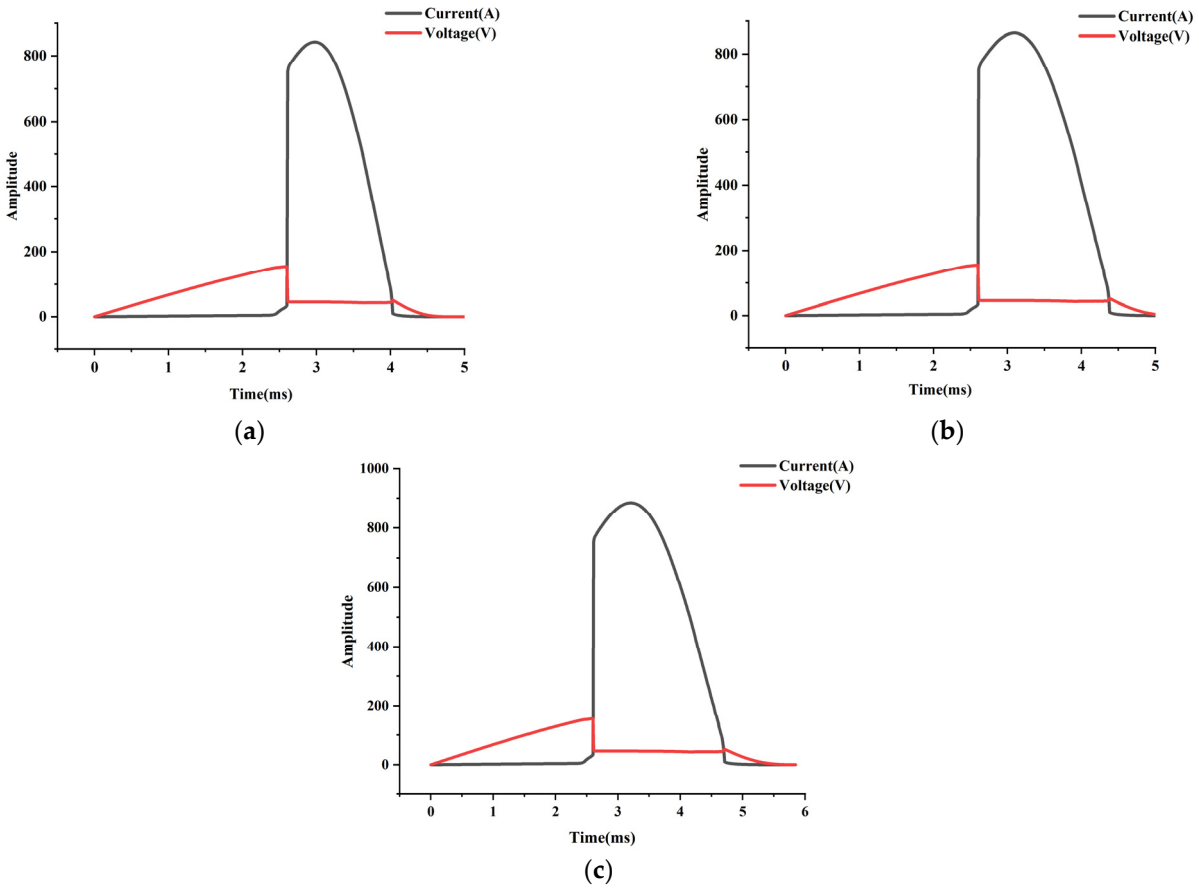

Figure 3. Voltage and current waveforms with: (**a**) Tripping time at 1.4 ms, (**b**) Tripping time at 1.7 ms, (**c**) Tripping time at 2.0 ms.

This study adopted a non-uniform mesh strategy, with minimum element sizes of 0.1 mm set for electrode contact surfaces and arc channel regions to capture boundary layer temperature gradients and electromagnetic field distributions. The maximum element size for peripheral air regions was 2.25 mm, with an element growth rate of 1.15 ensuring smooth mesh transitions and a curvature factor of 0.3 guaranteeing surface accuracy. The final average element mass was 0.87, meeting computational accuracy requirements. Mesh independence validation referenced grid validation methods from references [26–28], involving gradual refinement from a coarse 2000-element mesh to a fine 5000-element mesh, with multiple coarse, intermediate, and fine mesh configurations tested. Results demonstrated that when the mesh size reached approximately 5000 elements, both arc peak temperature and arc current variations remained below 3%, confirming mesh independence. Subsequent simulations were conducted using these optimized mesh parameters.

To validate the reliability of the meshing and simulation results of the magnetohydrodynamic (MHD) model presented in this paper, three literature studies were selected for comparative analysis, with key parameters listed in Table 2. Study [29] conducted an MHD-based simulation of a 220 V AC low-current arc, demonstrating core temperature profiles consistent with those simulated in this work. Study [30] measured electrode surface temperatures experimentally, showing deviations of less than 10% from simulation values under the 5 mm pole distance condition, with experimental currents closely matching those in this study, thereby validating the accuracy of electrode temperature calculations. The high-current short-circuit arc quenching simulation in Study [31] exhibited arc temperature and quench time patterns aligning well with the interruption characteristics described herein. In summary, the simulation results for temperature distribution, operating current,

and arc interruption characteristics in this paper exhibit high consistency with existing literature data, confirming the rationality of the meshing approach and the reliability of the MHD simulation model.

Table 2. Comparison of Key Parameters Between MHD Simulation in This Study and Literature Data.

Comparison Parameters	Simulation in This Paper	[29]	[30]	[31]
method	MHD simulation	MHD Simulation + Experimental Verification	experiment	MHD Simulation
electrode material	copper	copper	copper	copper
electrode gap	1–6 mm	2.5 mm	5 mm	2 mm
arc core temperature	10,000–25,000 K	10,000–20,000 K	-	>5000 K
electrode surface temperature	~960 K (5 mm)	-	~1070 K	-
maximum arc current	885 A	2, 4, 6 A low current	low current	1000 A
quenching time	1.4–2.0 ms	-	-	79–422 μm

2.5. Influences of Circuit Breaker Tripping Characteristics

Based on the established magnetohydrodynamic model and numerical framework, the influence of circuit breaker tripping characteristics on arc energy accumulation, peak temperature, and ignition risk is systematically analyzed. The analysis focuses on variations in tripping current thresholds and tripping times, which correspond to circuit breakers with different rated currents in practical LV AC systems.

Arc energy accumulation is evaluated by integrating the instantaneous Joule heating power over the arc duration prior to circuit breaker interruption. The simulation results indicate that arc energy increases monotonically with tripping delay, as successive AC cycles continuously inject energy into the arc plasma before interruption. Figure 4 illustrates the temporal evolution of accumulated arc energy and peak arc temperature under different tripping times. As the interruption is delayed, the total arc energy rises sharply, demonstrating the dominant role of tripping time in determining arc thermal severity. In addition, higher tripping currents also lead to slower breaker response and prolonged arc duration, resulting in higher peak temperatures and sustained high-temperature states. In contrast, rapid interruption effectively suppresses temperature growth and accelerates arc extinction. These results confirm that both tripping current and tripping time jointly govern the thermal behavior of short-circuit arcs.

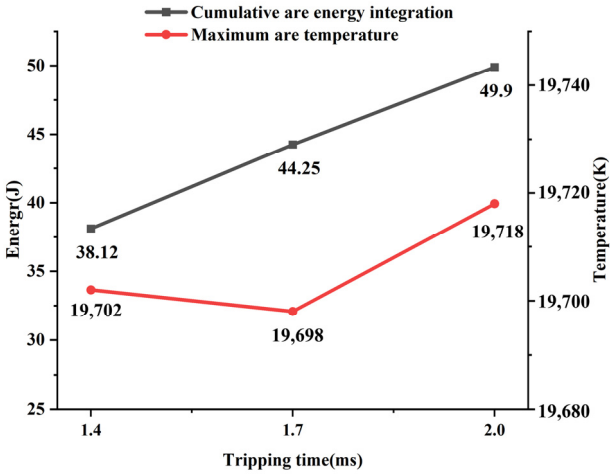

Figure 4. Arc energy accumulated and peak arc temperature under different tripping times.

In addition to temporal characteristics, the spatial distribution of arc temperature provides direct insight into ignition risk. Figure 5 presents representative temperature contour plots at selected time instants prior to interruption. With increasing tripping delay, the high-temperature region expands both radially and axially, extending beyond the immediate arc core. Regions where the temperature exceeds the typical ignition threshold of polymeric insulation materials can be identified, indicating potential ignition-prone zones in the vicinity of conductors and surrounding components.

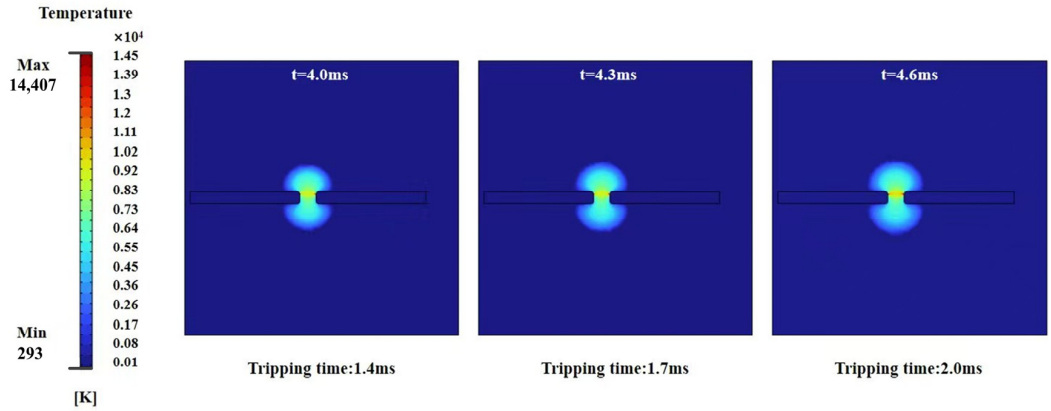

Figure 5. Arc temperature distribution before interruption.

For materials commonly used in LV power distribution environments (such as wire insulation, plastic enclosures, and nearby combustible deposits), ignition risk is determined by both the magnitude and duration of thermal exposure. The simulation results suggest that when the high-temperature region persists for extended periods due to delayed tripping, the probability of ignition increases significantly. Overall, the simulations demonstrate that arc-induced ignition risk in LV AC systems is strongly coupled with circuit breaker tripping characteristics. Delayed interruption and higher tripping current thresholds lead to excessive arc energy accumulation, elevated peak temperatures, and expanded high-temperature regions, thereby increasing the likelihood of ignition. These findings provide a quantitative basis for protection coordination and reliability-oriented design in LV systems associated with high-power-density electrical equipment, and they establish a theoretical foundation for the experimental validation presented in the following section.

3. Experimental Setup and Validation

To validate the numerical predictions obtained from the magnetohydrodynamic simulations, a series of LV AC short-circuit experiments are conducted. The experiments focus on the transient electrical characteristics of short-circuit arcs and the influence of fault occurrence phase and circuit breaker tripping characteristics on arc duration and energy dissipation.

3.1. Experimental Setup

A controllable 220 V phase-neutral short-circuit experimental platform is established using commercial C-series miniature circuit breakers with rated currents of 20 A, 32 A, and 63 A, as illustrated in Figure 6. Short-circuit faults are generated through a motor-driven wire contact mechanism, enabling repeatable initiation of faults at specified voltage phases.

Voltage and current signals during short-circuit and interruption processes are measured using high-bandwidth probes and recorded by a digital oscilloscope with a sufficient sampling rate to capture rapid transient phenomena. The experimental setup allows sys-

tematic investigation of both the fault initiation process and the circuit breaker tripping behavior under identical short-circuit conditions.

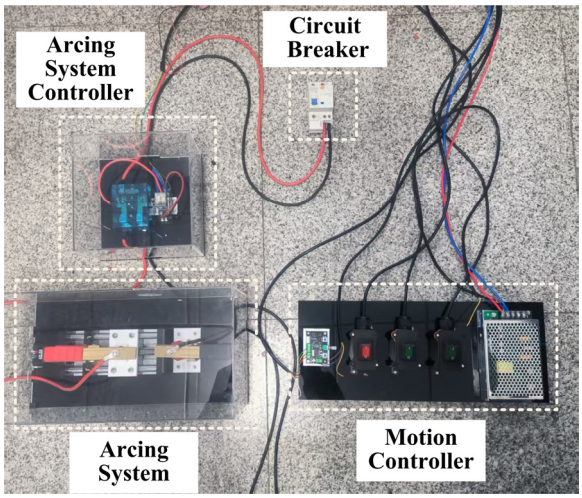

Figure 6. Experimental platform.

3.2. Validation

Figure 7 illustrates representative voltage and current waveforms for short-circuit faults occurring at different voltage phases. The experimental results show that the fault occurrence phase has a significant influence on short-circuit current magnitude and energy release. When the short circuit occurs during the voltage rising edge, the peak current reaches approximately 1000 A, whereas a lower peak of about 700 A is observed for faults occurring during the voltage falling edge. The corresponding energy dissipation during rising-edge faults is more than three times that of falling-edge faults, confirming the simulation prediction that arc energy accumulation is strongly governed by the electrical conditions at fault initiation.

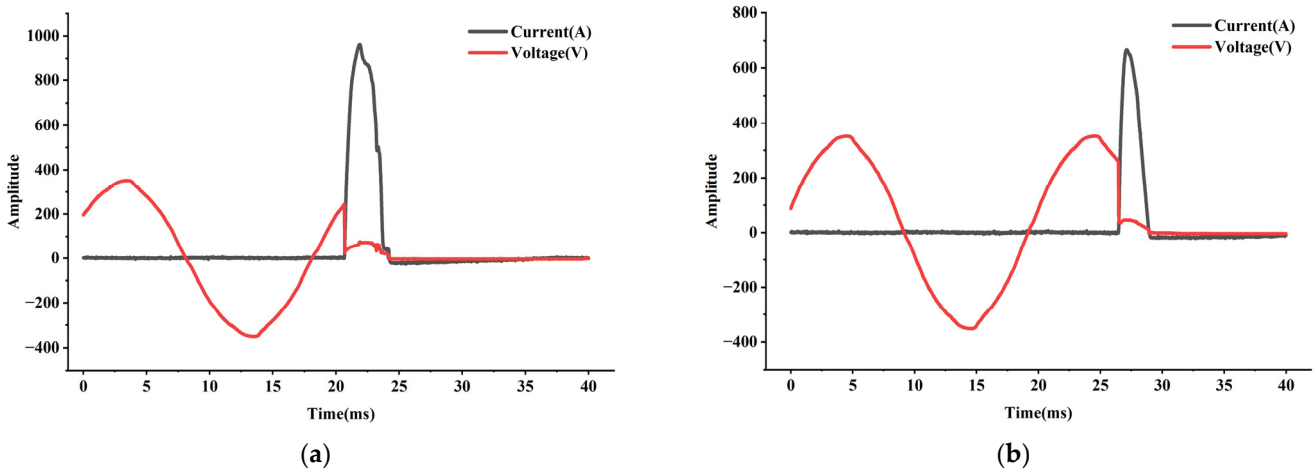

Figure 7. Voltage and current waveforms for short-circuit faults occurring at different voltage phases: (**a**) A short circuit occurs at the voltage rising edge, (**b**) A short circuit occurs at the voltage falling edge.

Figure 8 compares the voltage and current waveforms obtained using circuit breakers with rated currents of 20 A, 32 A, and 63 A under identical short-circuit conditions. While the peak short-circuit current remains nearly unchanged, the tripping time increases with breaker rating. Based on multiple repeated measurements, the measured tripping times showed good repeatability, with deviations within 10%. The mean tripping times of the 20 A, 32 A, and 63 A miniature circuit breakers were approximately 1.4 ms, 1.7 ms, and

2.0 ms, respectively. This trend directly validates the numerical result that arc duration and energy accumulation are dominated by circuit breaker tripping delay rather than by instantaneous fault current magnitude.

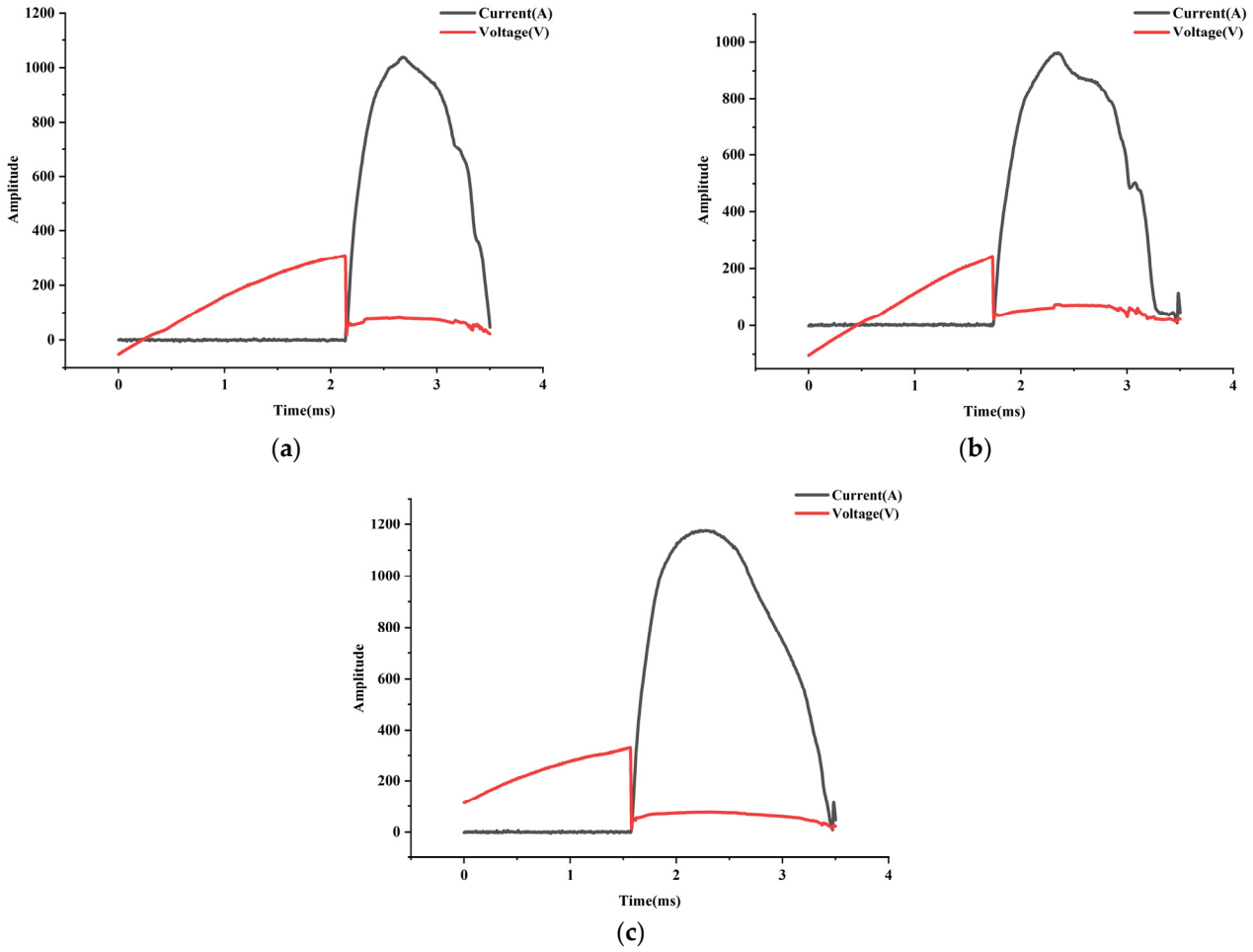

Figure 8. Voltage and current waveforms with different triggering currents: (**a**) Air circuit breaker tripped at 1.4 ms, (**b**) Air circuit breaker tripped at 1.7 ms, (**c**) Air circuit breaker tripped at 2.0 ms.

Post-test inspection reveals pronounced arc erosion and melting marks on the circuit breaker contacts, indicating substantial localized thermal energy deposition even under rapid interruption conditions. These observations are consistent with the simulated high-temperature regions near the arc root and further support the simulation-based assessment of arc-induced ignition risk in LV AC systems. Overall, the experimental results corroborate the numerical findings and confirm that fault phase and circuit breaker tripping characteristics jointly govern arc energy accumulation and associated ignition risk.

4. Conclusions

In this study, the magnetohydrodynamic behavior and ignition risk of short-circuit arcs in LV 220 V AC systems are systematically investigated through combined numerical modeling and experimental validation. A transient MHD model is established to describe the coupled evolution of arc plasma, electromagnetic force, and thermal fields under different circuit breaker tripping characteristics. The numerical predictions are further validated using a controllable short-circuit experimental platform equipped with circuit breakers of different rated currents. The results demonstrate that arc energy accumulation and thermal severity are jointly governed by the electrical conditions at fault initiation and the

tripping characteristics of circuit breakers. The fault occurrence phase significantly affects the peak short-circuit current and initial energy release, while the circuit breaker tripping time plays a dominant role in determining arc duration, cumulative energy dissipation, and peak temperature. Delayed interruption and higher tripping current thresholds lead to excessive arc energy accumulation, expansion of high-temperature regions, and increased ignition risk.

Experimental measurements of voltage and current waveforms confirm the numerical trends, showing that variations in breaker rating mainly influence tripping delay rather than peak fault current, and that prolonged arc duration results in substantially higher energy release. The observed arc erosion on circuit breaker contacts further supports the simulation-based assessment of localized thermal concentration and potential ignition hazards. This work provides a quantitative framework for analyzing fault-induced arc behavior and ignition risk in LV AC systems. The proposed MHD-based approach offers valuable guidance for protection coordination, reliability-oriented design, and fire-risk mitigation in LV systems associated with high-power-density electrical equipment.

It should be noted that this study is primarily oriented toward urban electricity-use scenarios, for which the 220 V AC short-circuit condition was selected as the main analysis and experimental case. In practical low-voltage power systems, however, other voltage levels as well as DC conditions may also be encountered. Under these conditions, factors such as arc length, system impedance, and arc energy may differ, which could further affect the fault current characteristics and thermal responses. These cases will be investigated in future work through extended modeling and experimental validation.

Author Contributions: Conceptualization, S.L. and G.Z.; methodology, S.L., H.Z. and G.Z.; software, H.Z., W.J. and G.Z.; validation, X.W. (Xin Wang), Y.W., L.L., J.L., W.J. and G.Z.; formal analysis, X.W. (Xin Wang), Y.W. and X.W. (Xian Wu); investigation, S.L. and H.Z.; data curation, X.W. (Xin Wang); writing—original draft preparation, S.L. and H.Z.; writing—review and editing, W.J., L.L. and G.Z.; supervision, G.Z.; project administration, S.L., W.J. and G.Z.; funding acquisition, S.L., W.J., L.L. and G.Z. All authors have read and agreed to the published version of the manuscript.

Funding: This research was funded in part by the Key Laboratory of Fire Protection Technology for Industry and Public Building, Ministry of Emergency Management, grant number 2025KLIB03; in part by the Multiple Investment in Applied Basic Research of Tianjin, grant number 24JCZDJC00080; in part by the Tianjin Key Research and Development Program Project, grant number 23YZCSN00250; in part by the Hebei Natural Science Foundation, grant number E2025110028; and in part by the China Postdoctoral Science Foundation, grant number 2024M761259.

Data Availability Statement: Data is contained within the article.

Conflicts of Interest: The authors declare no conflicts of interest.

Abbreviations

The following abbreviations are used in this manuscript:

MHD	Magnetohydrodynamic
LV	Low-voltage
AC	Alternating current

References

1. Land, H.; Gammon, T. Addressing Arc-Flash Problems in Low-Voltage Switchboards: A Case Study in Arc Fault Protection. *IEEE Trans. Ind. Appl.* **2015**, *51*, 1897–1908. [CrossRef]
2. *World Energy Outlook 2023*; IEA: Paris, France, 2023. Available online: https://www.iea.org/reports/world-energy-outlook-2023 (accessed on 1 March 2026).

3. National Fire and Rescue Bureau of China. The Average Daily Number of Fires Nationwide Exceeded 3000 in the First Half of 2023. Available online: https://www.119.gov.cn/qmxfgk/sjtj/2023/38420.shtml (accessed on 1 March 2026).
4. Liu, P.; Huangfu, Y.; Wang, W. Evaluation of Aviation AC Arc Fault Damage to Electrical Wiring Interconnection System Based on MHD Simulation. *IEEE Trans. Magn.* 2025, *early access*. [CrossRef]
5. Zhang, Z.; Nie, Y.; Lee, W. Approach of Voltage Characteristics Modeling for Medium-Low-Voltage Arc Fault in Short Gaps. *IEEE Trans. Ind. Appl.* **2019**, *55*, 2281–2289. [CrossRef]
6. Chen, F.; Xu, Y.; Cao, Z.; Wang, Z.; Ma, X. Hybrid Kinetic-MHD Simulations of Vacuum Arc Using Field-Circuit Coupling Method. *IEEE Trans. Magn.* **2020**, *56*, 7501704. [CrossRef]
7. Chandraratne, C.; Logenthiran, T.; Naayagi, R.T.; Woo, W.L. Overview of adaptive protection system for modern power systems. In Proceedings of the 2018 IEEE Innovative Smart Grid Technologies-Asia (ISGT Asia), Singapore, 22–25 May 2018; pp. 1239–1244.
8. Huang, C.; Liu, X.; Chen, H.; Li, L.; Zhu, G. Investigation of Arc Characteristics of a DC Vacuum Circuit Breaker with Double-Break Under Asynchronous Interrupting. *IEEE Trans. Plasma Sci.* **2019**, *7*, 3533–3539. [CrossRef]
9. Zhang, Z.; Tang, X.; Huang, Q.; Lee, W.-J. Preemptive Medium-Low Voltage Arc Flash Detection with Geometric Distribution Analysis on Magnetic Field. *IEEE Trans. Ind. Appl.* **2021**, *57*, 2129–2137. [CrossRef]
10. Dong, E.; Wang, G.; Wang, Y.; Yin, S.; Ji, Y.; Tong, B.; Zou, J. Research on Asynchronous Characteristics of Three-Phase Arc in Contactor. *IEEE Trans. Plasma Sci.* **2023**, *51*, 2697–2704. [CrossRef]
11. Huang, C.; Yan, J.; Fu, S.; Du, H.; Li, Z.; Zhang, F. Equivalent Regulation Mechanism of Electron Density Distribution in Vacuum Arcs by Transverse Magnetic Fields and Contact Gaps. *IEEE Trans. Dielectr. Electr. Insul.* 2025, *early access*. [CrossRef]
12. Chen, R.; Li, W.; Dong, E.; Wang, Y.; Zhang, L.; Yuan, F.; Zhang, J. Analysis of Arc Characteristics of C4F7N/CO2 Mixed Gas Ring Main Unit. *IEEE Trans. Plasma Sci.* **2022**, *50*, 1948–1956. [CrossRef]
13. Wang, L.; Huang, X.; Zhang, L.; Jia, S.; Hu, L.; Zhou, X.; Shi, Z. Transient MHD Modeling and Simulation of High-Current Vacuum Arc Under Three Kinds of Interruption Processes. *IEEE Trans. Plasma Sci.* **2013**, *41*, 2007–2014. [CrossRef]
14. Huang, C.; Yang, S.; Shan, Z.; Li, Z.; Cao, Y. Study of arc and magnetic field parameters under delayed breaking condition of DB-DC VCB. *AIP Adv.* **2024**, *14*, 105019. [CrossRef]
15. Mello, M.D.; Noonan, M.; Aulakh, H.; Mirabent, J. Arc Flash Energy Reduction-Case Studies. *IEEE Trans. Ind. Appl.* **2013**, *49*, 1198–1204. [CrossRef]
16. Xia, S.; Wu, J.; Tong, Z.; Lin, J.; Wei, D.; Chen, R. Characteristics of Intermediate Frequency Vacuum Arc Under Different Breaking Speeds. *IEEE Trans. Plasma Sci.* **2024**, *52*, 4498–4505. [CrossRef]
17. Wang, L.; Qin, K.; Deng, J.; Jia, S. Modeling of mixing and interaction of multi-cathode spot vacuum arc jets. *AIP Adv.* **2016**, *6*, 125019. [CrossRef]
18. Gammon, T.; Matthews, J. Instantaneous Arcing-Fault Models Developed for Building Power Systems. *IEEE Trans. Ind. Appl.* **2001**, *37*, 1058–1064. [CrossRef]
19. Land, H.; Gammon, T.; Ezrin, M. The Effects of System Grounding, Bus Insulation and Probability on Arc Flash Hazard Reduction—Case Studies. In Proceedings of the 2014 IEEE IAS Electrical Safety Workshop, San Diego, CA, USA, 2–7 February 2014; pp. 1–9.
20. Rojewska, M.; Kulesza, Z.; Szymański, P. Results of Arc Processes Registration in Single-Phase Short Circuits in Low-Voltage Installations. In Proceedings of the 2023 IEEE 6th International Conference on Electrical Engineering and Green Energy (CEEGE), Los Angeles, CA, USA, 16–18 June 2023; pp. 89–94.
21. Li, Z.; Zhang, Y.; Wang, H.; Liu, P. Research on Arc Energy Release Characteristics of Live Working in Low-Voltage DC Distribution System. In Proceedings of the 2022 IEEE International Conference on Power Systems and Electrical Technology (PSET), Shanghai, China, 18–20 October 2022; pp. 312–317.
22. Sheng, D.; Wang, Y.; Xing, Y.; Yu, J.; Bao, Z. Research on Fire Risk of Low Voltage AC Series Fault Arc Based on Magnetohydrodynamics Simulation. *Trans. China Electrotech. Soc.* **2025**, *40*, 3326–3338. Available online: https://ieeexplore.ieee.org/document/11224864 (accessed on 1 March 2026).
23. Wang, Q.; Ge, S.W.; Cao, W.D.; Yu, S.S.; Liao, Z.J. Study of Arc Interruption Characteristics under Rated Current in Low Voltage Circuit Breakers. *Energies* **2023**, *16*, 4114. [CrossRef]
24. Rong, M.; Ma, R.; Chen, J. Numerical Investigation on Arc Behavior in Low-Voltage Arc Chamber Considering Turbulence Effect. *IEEE Trans. Plasma Sci.* **2014**, *42*, 2716–2717. [CrossRef]
25. Gao, C.; Zhang, Z.; Liu, Y. Natural Commutation Characteristics of Self-Triggered Low-Voltage DC Hybrid Circuit Breakers. *IEEE Trans. Compon. Packag. Manuf. Technol.* **2025**, *15*, 2399–2407. [CrossRef]
26. Wang, Y.; Liu, X.; Zhang, H. Investigation on heat transfer and fluid flow of a plasma arc in a plasma melting furnace: Model validation and parameter effects. *Processes* **2024**, *12*, 1101.
27. Li, M.; Chen, J.; Wang, S. The Arc Rotational Characteristics Inside a Plasma Torch with an External Magnetic Field. *Processes* **2023**, *11*, 567.

28. Zhang, L.; Wang, K.; Liu, Y. Process Simulation of Humidity and Airflow Effects on Arc Discharge Characteristics in Pantograph–Catenary Systems. *Processes* **2025**, *13*, 33295. [CrossRef]
29. Li, Y.; Zhang, R.; Yang, K.; Qi, Y. Research on an Equivalent Heat Source Model of the AC Arc in the Short Gap of a Copper-Core Cable and a Fire Risk Assessment Method. *Sensors* **2024**, *24*, 1443. [CrossRef] [PubMed]
30. Zhang, M.S.; Ge, F.L.; Hu, H.W.; Ji, J. Experimental research on the fault arc arcing process and electrode temperature distribution of a 220VAC power system. *Int. J. Therm. Sci.* **2024**, *199*, 108895. [CrossRef]
31. Jia, W.; Sima, W.; Yuan, T.; Yang, M.; Sun, P. Optimization and Experimental Study of the Semi-Closed Short-Gap Arc-Extinguishing Chamber Based on a Magnetohydrodynamics Model. *Energies* **2018**, *11*, 3335. [CrossRef]

Disclaimer/Publisher's Note: The statements, opinions and data contained in all publications are solely those of the individual author(s) and contributor(s) and not of MDPI and/or the editor(s). MDPI and/or the editor(s) disclaim responsibility for any injury to people or property resulting from any ideas, methods, instructions or products referred to in the content.