processes

MDPI

Article

Hydrodynamic Cavitation-Assisted Hydrothermal Separation: A Pathway for Valorizing Lignocellulosic Biomass into Biopolymers and Extractives

Md. Bayazid Ahmed and Souman Rudra *

Department of Engineering Sciences, University of Agder, 4879 Grimstad, Norway; ahmed.bayazid.bd@gmail.com
* Correspondence: souman.rudra@uia.no; Tel.: +47-37233036

Abstract

Lignocellulosic biomass is a sustainable renewable resource for producing biopolymers, chemicals, and high-value compounds. This study proposes a biomass valorization concept that combines hydrodynamic cavitation (HC) and hydrothermal separation (HTS) to produce high-value products. Aspen Plus software was used in this study to develop the first simulation-driven integration of HC and HTS for biomass valorization in the biorefinery concept. The overall separation efficiency and component yield for standalone HC and HTS processes agreed with the experimental data. The findings from the simulation results indicate that the coupled processes yielded a significant enhancement in overall separation efficiency. This coupling resulted in a 24.5% increase compared to a single HC process and 16.75% higher efficiency than a single HTS process for sugarcane bagasse. The sensitivity analysis showed that incrementing HTS temperature and reaction time results in higher component yield and overall separation efficiency. The increase in the S/L ratio demonstrated a higher component yield in the process downstream, whereas the efficiency remained approximately the same. The effect of the HTS pressure was negligible on component yield and overall separation efficiency. Moreover, this study identified the optimal process parameters of the coupled process. At the optimal condition, quadratic models showed an overall separation efficiency of 79.41 $\pm$ 2.71% for the HC-HTS coupled process. This approach promises superior biomass utilization over traditional processes, minimizing waste and environmental impact while expanding the potential applications of biomass.

Keywords: hydrodynamic cavitation; hydrothermal separation; lignocellulosic biomass; process design

check for updates

Academic Editors: Alessandro Monteverde and Giuseppe Pipitone

Received: 14 April 2025
Revised: 11 June 2025
Accepted: 18 June 2025
Published: 27 June 2025

Citation: Ahmed, M.B.; Rudra, S. Hydrodynamic Cavitation-Assisted Hydrothermal Separation: A Pathway for Valorizing Lignocellulosic Biomass into Biopolymers and Extractives. *Processes* **2025**, *13*, 2041. https://doi.org/10.3390/pr13072041

Copyright: © 2025 by the authors. Licensee MDPI, Basel, Switzerland. This article is an open access article distributed under the terms and conditions of the Creative Commons Attribution (CC BY) license (https://creativecommons.org/licenses/by/4.0/).

1. Introduction

The global dependency on renewable and sustainable sources of energy and chemicals has intensified due to the limited availability of traditional energy sources, the growing demand for energy and chemicals, and the escalation of carbon emissions. Lignocellulosic biomass, in this context, can be a promising solution for mitigating the demand by producing energy in the form of biofuel and a source for producing biochemicals and biomaterials in biorefineries.

Lignocellulosic biomass (LCB) mainly consists of three biopolymers, i.e., cellulose, hemicellulose, and lignin, accounting for 60–90% of their dry weight and the remaining

composition includes extractives, minerals, and ash [1]. In an LCB plant cell, cellulose and hemicellulose are densely compacted in the center and a lignin-rich layer on the outer surface. The layer of lignin protects the biomass from microbial attack or chemical degradation [2,3]. Therefore, breaking the cell structure and accessing the biomass components remains challenging due to its recalcitrant structure [4]. To overcome the challenges, pretreatment steps are necessary for converting lignocellulosic biomass into respective polymers and compounds that can be used as raw materials for producing biofuel, biomaterials, and chemicals, as shown in Figure 1 [5].

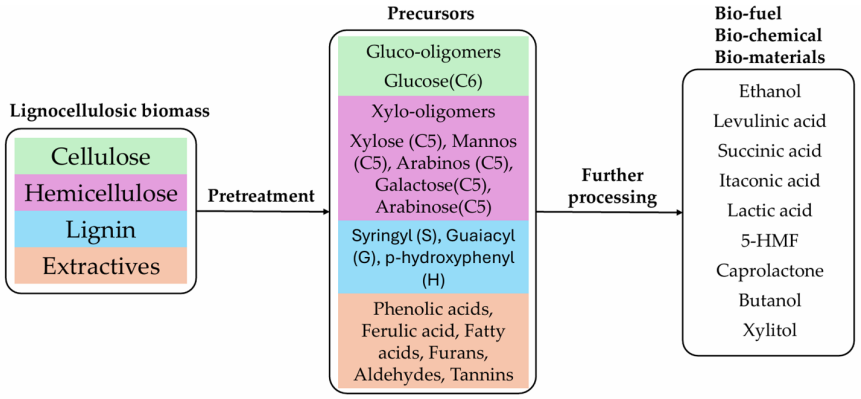

Figure 1. Bio-based fuel, chemicals and materials derived from lignocellulosic biomass after pretreatment.

Hydrodynamic cavitation (HC) and Hydrothermal separation (HTS) are both used as a pretreatment method for biomass valorization. In HC, localized pressure drop leads to the formation of cavitation bubbles in water; the collapsing bubbles create high shock waves that advance to the formation of highly reactive radicals, like the hydroxyl radical (•OH), resulting in the disintegration of the lignin structure as well as an increase in the porosity of the biomass particles [6,7]. The intensity of the cavitation is measured by the cavitation number, which can be tuned by changing the HC reactor pressure, temperature, and geometry (orifice, venturi-type etc.) [8]. Meanwhile, the HTS process involved elevated temperatures (160–240 °C) and above-saturated vapor pressure with liquid water as the sole solvent and catalyst [9]. During this process, water undergoes autoionization to create hydronium ions that depolymerize the hemicellulose by cleaving the O-acetyl and uronic acid substitutions [10]. Previous studies showed that HC pretreatment mainly focuses on accessing more cellulose by disrupting and removing the lignin layer from the biomass, where the lignin content in the downstream process water is considered waste [11]. The HTS process also focuses on accessing cellulose by removing hemicellulose content in process water [12]. The problem with these methods is that they focus only on the yield of cellulose content. Considering lignin and hemicellulose as waste is not only a waste of resources but would also cause severe environmental pollution. Therefore, the coupling of HC-HTS has the potential for efficient valorization of lignocellulosic biomass by considering all the processes downstream as valuable and reducing waste.

Baxi and Pandit (2012) conducted the first study to investigate the effectiveness of the HC-Chemical coupled process on delignification [13]. They utilized HC and alkali to pretreat sawdust, revealing a higher lignin removal rate than an ultrasound bath with a 500 mL capacity. Additionally, a study by Kim et al. [6] showed that the HC-Alkali coupled process resulted in 35–42% lignin removal and 326.5 g of glucose per kilogram of biomass after 72 h of enzymatic hydrolysis. The optimal conditions were 3% NaOH, 11.8% solid load, 41.1 min of reaction duration, and 77 °C of temperature. Furthermore, Preece et al. [14] reported that the extraction of soy protein with the HC process yielded better results than ultrasound-based extraction (82% versus 70%). In the context of environmentally

friendly extraction methods, HC has achieved significant extraction yields of bioactive compounds from Silver Fir (Abies alba Mill.) needles, as well as from waste orange peels, as demonstrated in prior studies [15,16]. The HC process helps break the complex structure of biomass, increases porosity, and enhances mass transfer and accessibility of components for further processing [17].

In their study, Batista et al. [18] employed the HTS process alone to achieve the removal of 85.45% of hemicellulose and 9.80% of cellulose from sugarcane straw, operating at a reactor temperature of 195 °C with a reaction time of 10 min. Similar studies were conducted to remove the hemicellulose and cellulose from corn stover [19] and sugarcane straw [20] at different process conditions. During the HTS process, lignocellulose undergoes substantial microstructural changes. Its surface morphology becomes more porous, cell walls are altered, and micropores enlarge. Furthermore, the pretreatment impacts the crystallinity of lignocellulose, resulting in less compact surface morphology and the appearance of longitudinal cracks in the fascicular structure [2]. Thanks to their unique mechanism of HC and HTS process, they have the potential for integration to valorize the lignocellulosic biomass efficiently by considering all the processes downstream as valuable. In the literature, while HC and HTS are individually established, their synergistic integration (HC–HTS) has not been systematically modeled or optimized for component yield enhancement. Hence, this study is the first simulation-driven integration of HC and HTS for biomass valorization in the biorefinery concept.

This study aims to analyze the HC-HTS coupled process numerically to evaluate its effectiveness in biomass valorization using Aspen Plus simulation software. This is a preliminary study to understand the behavior of the coupled process before proceeding with the experimental process. This study addresses how the HC-HTS coupled process performs better than the standalone process, how process parameters affect the overall separation efficiency, and in which process conditions it will perform efficiently. This novel endeavor presents a pioneering and efficient biomass processing concept, leveraging the synergistic potential of hydrodynamic cavitation and hydrothermal separation. By harnessing these methodologies, the endeavor seeks to unlock the valorization of biomass, fostering the production of high-valued products. The approach will be used to transition to a biobased economy and new technology challenge, which is expected to be the sustainable source of chemical raw materials for circular bioeconomy.

Throughout the study, cellulose content means the sum of glucose and glucose-oligomers, hemicellulose content means the sum of xylose and xylo-oligomers, and the lignin and extractive content represents the lignin and extractive yield after pretreatment.

2. Methods

2.1. Process Development and Calculation Methods

The biomass valorization process in this study was investigated numerically using Aspen Plus V.11 software. The coupling process involves the integration of hydrodynamic cavitation (HC) and hydrothermal separation (HTS) units. The overall process layout of the coupling is shown in Figure 2. As mentioned earlier, the HC and HTS processes can be used independently as pretreatment processes. Hence, in this study, three distinct simulation models, i.e., HC process, HTS process, and HC-HTS coupled process, were developed to evaluate the efficacy of the coupled process against independent processes. In Aspen Plus, the Soave-Redlich-Kwong (SRK) equation of state was used as a thermodynamic property method for all flowsheet models. The SRK model is particularly suitable for hydrocarbon systems. It can handle a wide range of temperatures and pressures, which is essential for accurately simulating processes with reaction kinetics [21].

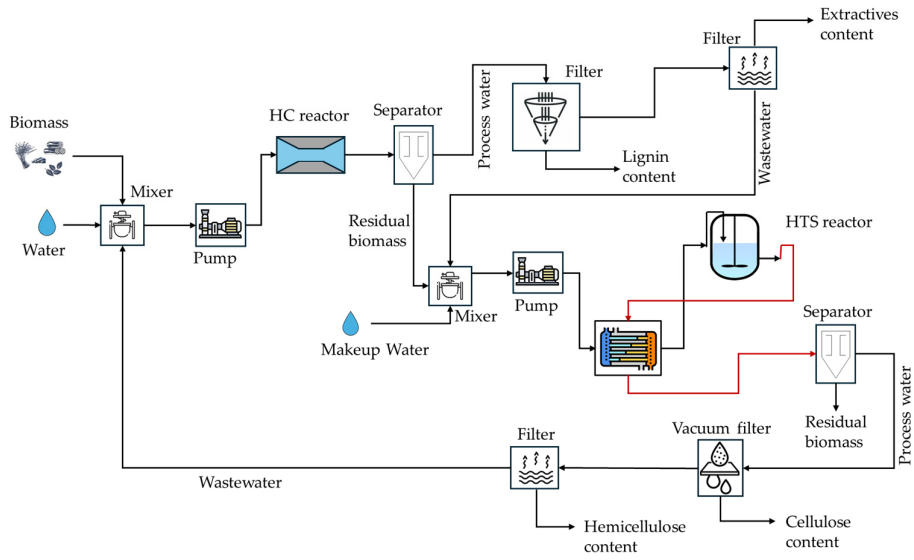

Figure 2. Schematic illustration of HC-HTS coupled process.

2.2. Lignocellulosic Biomass, Components Specification and Assumptions

During process analysis, sugarcane bagasse was selected as the raw biomass for the feedstock. The Sugarcane Bagasse was defined as a non-conventional component in the simulation flowsheet according to the proximate and ultimate analysis data from the literature [22], as shown in Table 1. The enthalpy and density were calculated using the HCOALGEN and DCOALIGHT methods.

Table 1. Proximate and Ultimate analysis of Sugarcane Bagasse [22].

Proximate Analysis	wt%	Ultimate Analysis	wt%
Moisture	7.59	C	43.38
Volatile matter	87.37	H	6.43
Fixed carbon	3.69	N	0.39
Ash	1.00	S	0.058
		O	49.74
HHV, MJ/kg	19.68		

In this study, the composition of sugarcane bagasse was considered cellulose, hemicellulose, lignin, and extractives. Following pretreatment, cellulose-derived components were considered glucose-oligomers and glucose, hemicellulose-derived components consisting of xylo-oligomers and xylose, "lignin content" for lignin and "extractive content" for extractives. While the AspenONE databank is commonly used to define chemical components, it lacks direct representations for cellulose and hemicellulose. Therefore, this study utilized the *INHSPCD* databank, developed by the National Renewable Energy Laboratory (NREL), to define components such as cellulose, hemicellulose, lignin, xylose, and glucose [23]. Representative compounds for oligomers and extractives were also selected from the *INHSPCD* and *NISTV110* databanks: D-xylose and dextrose for xylo- and gluco-oligomers, *p*-coumaryl alcohol for lignin content, and ferulic acid for extractive content [24–26].

However, some added components required additional properties or parameters that were missing in the AspenONE databank and were imported from the literature. P-coumaryl alcohol necessitated the introduction of several parameters to calculate its molar heat capacity, vapor pressure, and vaporization enthalpy, which were obtained in work published by Gorensek et al. [26]. Gorensek et al. [26] calculated the heat capacity using the following Aly–Lee equation (Equation (1)). The relevant parameters were imported into Aspen Plus using the CPALE-1 parameter.

$$\mathrm{cp} = 128,972.6 + 342,667.4\left(\frac{\frac{1575.222}{\mathrm{T}}}{\sinh\frac{1575.222}{\mathrm{T}}}\right)^2 + 266,861.9\left(\frac{\frac{728.2816}{\mathrm{T}}}{\sinh\frac{728.2816}{\mathrm{T}}}\right)^2; 298 \leq \mathrm{T} \leq 1000 \quad (1)$$

where the heat capacity is in J/kmol. K^{-1} and the temperature in K.

The vapor pressure (in pascals) of P-coumaryl alcohol was calculated through the extended Antoine equation (Equation (2)), and the relevant values were imported into the Aspen Plus using PLXANT-1 parameter.

$$lnP = 2,867,075 - \frac{25,124.63}{T} - 37.26739lnT + 1.48627 \times 10^{-5}T^2; 406.15 \leq T \leq 791.4 \quad (2)$$

where the vapor pressure is in pascals and temperature is in K.

Finally, the vaporization enthalpy was calculated using the Watson equation (Equation (3)), and the relevant coefficients were defined using the DHVLWT parameter.

$$\Delta H_{vap}(T) = \Delta H_{vap}(T_1)\left(\frac{1-\frac{T}{T_C}}{1-\frac{T_1}{T_C}}\right)^{a+b(1-\frac{T}{T_C})}; T > T_{min} \quad (3)$$

From this calculation, the enthalpy of vaporization is 59.7 kJ/mol at 25 °C. Parameters a and b were assumed to take the default values of 0.38 and 0, respectively, considering the value of T_{min} of 273 K.

The following assumptions were considered during the process simulation-

- Steady-state process conditions.
- All the separators were ideal.
- No pressure drop occurred throughout the process.
- The hydrothermal separation reactor neglected the conversion of lignin and extractives from biomass.
- No chemical changes in water were considered during the process simulation.
- Ash was considered an inert component.

2.3. Hydrodynamic Cavitation

Hydrodynamic cavitation creates vapor bubbles when the localized pressure of the liquid falls below the vapor pressure of the same liquid. The collapsing cavities produce powerful shockwaves with very high pressures and intense turbulence, resulting in significant strain of biomass [27]. This process leads to the formation of highly reactive radicals, like the hydroxyl radical (•OH), by breaking down water molecules, resulting in the disintegration of the structure of lignin as well as an increase in the porosity of the biomass particles [6,7].

During process simulation, the hydrodynamic cavitation reactor was considered a yield reactor (RYield) block. A fraction of lignin, cellulose, hemicellulose, and extractives of biomass convert into their intermediary and final compounds during the HC process. The yield of lignin, cellulose, and hemicellulose content for sugarcane bagasse was adopted as 48.31%, 9.20%, and 19.81%, respectively, for maximum delignification conditions from the literature [28]. In their study, Teran et al. [28] investigated the pretreatment efficacy of the HC process experimentally for sugarcane straw, where they used an orifice-type reactor with a cavitation number of 0.07 for the reactor conditions of 3 bar of inlet pressure, 60 °C, and 20 min. They also used alkalis (KOH) in their process. However, this study did not use any alkalis directly in the process, but the effect was considered in the HC reactor yield. The yield was estimated as 45% for extractives based on a study by R. C. Sun et al. [29], where they extracted the lipophilic extractives from wheat straw by hot water extraction. Here,

"yield" means the components produced from the biomass after HC pretreatment. Since the HC process mainly focused on the delignification and the separation of extractives from the lignocellulosic biomass. Thus, only the yield of delignified components and extractives was separated after the HC process, and the remaining yields were considered in the process water for the next step.

2.4. Hydrothermal Separation (HTS)

This study considered the hydrothermal separation reactor to be a batch reactor. Previous studies demonstrate that autohydrolysis during hydrothermal separation primarily depolymerizes the hemicellulose and cellulose moiety of lignocellulosic biomass into respective oligomer and monomeric sugar units. However, the yield of lignin is often overlooked, as most of the dissolved lignin after depolymerization recondenses on the residual biomass during the HTS process [30]. Thus, only the yield of hemicellulose and cellulose content after the HTS reactor was considered in the process water. The chemical reactions for cellulose and hemicellulose during the HTS process, as shown in Figure 3, were adopted from a study by S. Rocha et al. [20]. The kinetic parameters for autohydrolysis of hemicellulose and cellulose are shown in Table 2. Where reactions were considered first-order Arrhenius-type (Equation (4)) kinetic reactions.

$$\ln k = -\frac{Ea}{RT} + lnA \tag{4}$$

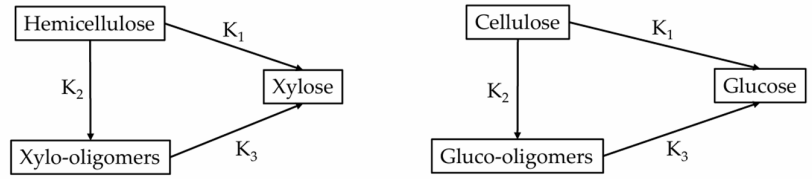

Figure 3. Hemicellulose and Cellulose hydrolysis during the HTS process.

Table 2. Arrhenius parameters of hemicellulose and cellulose autohydrolysis for sugarcane bagasse [20].

Kinetic Rate Constant	Hemicellulose		Cellulose	
	ln(A)	E_a, kJ/mol	ln(A)	E_a, kJ/mol
K_1	10.90	62.68	22.40	105.14
K_2	25.75	109.49	49.67	216.44
K_3	53.66	220.23	25.32	105.60

2.5. Aspen Plus Model Description

Three simulation models were designed to assess their effectiveness regarding component yield and overall separation efficiency. 'Model 1' and 'Model 2' were constructed to represent the independent processes of HC and HTS, respectively. 'Model 3', meanwhile, was developed to simulate the HC-HTS coupled processes.

2.5.1. Model 1: Hydrodynamic Cavitation (HC) Process

In Figure 4, the green-dotted area represents the HC process model. Based on the proximate and ultimate analysis data in Table 1, sugarcane bagasse was defined as a non-conventional component in the BIOMASS stream with a mass flow rate of 100 kg/h, 25 °C and 1 bar. Water in the H_2O stream has a mass flow rate of 900 kg/h with 25 °C and 1 bar. The MIXER1 block mixes the biomass with water and makes a slurry of 1000 kg/h that passes through the PUMP1 by maintaining a pressure of 3 bar and HEATER1 block

to increase the temperature to 60 °C for the HC reactor. The HC reactor (HCR block) was considered a yield reactor (RYield) block, which converts the biomass into lignin, extractives, cellulose, and hemicellulose contents based on the components atom balance and experimental yield data from the literature [20,28,29]. The operating conditions for the HCR block were a pressure of 3 bar and a temperature of 60 °C with a total mass flow rate of 1000 kg/h.

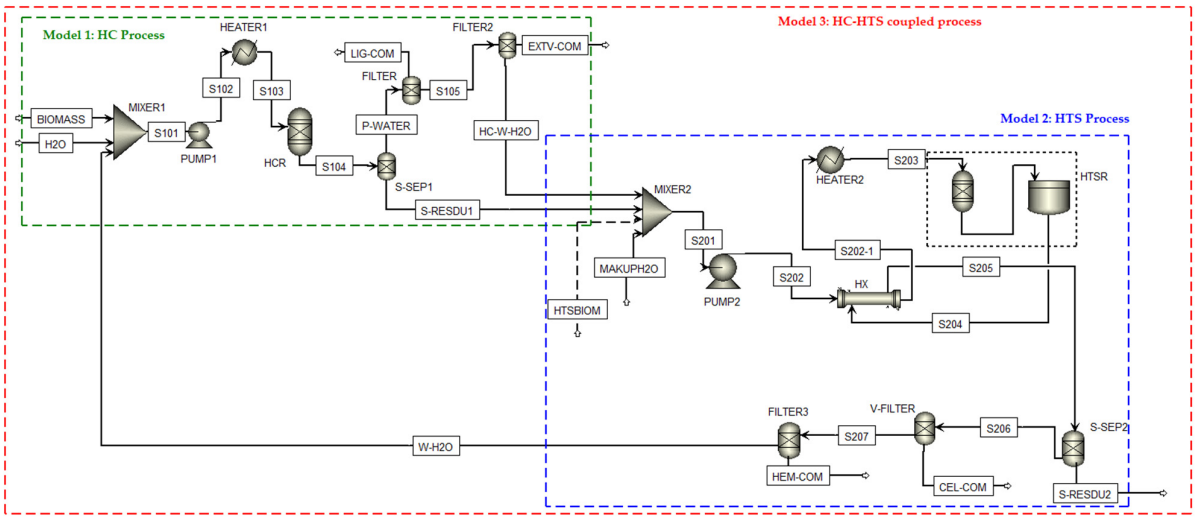

Figure 4. Process flowsheet of Model 1: HC process (green-dotted area), Model 2: HTS process (blue-dotted area), and Model 3: HC-HTS coupled process (red-dotted area).

Furthermore, the separator block S-SEP1 removed the solid residue from the stream S104 of pretreated biomass, and the process water (P-WATER) contained the separated lignin, extractives, and a small fraction of hemicellulose and cellulose. The lignin content from the process water was separated by filtration in the FILTER block. The extractives were separated by evaporation in the FFILTER2 block, and the remaining cellulose and hemicellulose content went with the HC-W-H2O stream as waste.

2.5.2. Model 2: Hydrothermal Separation (HTS) Process

The blue-dotted area in Figure 4 illustrates the simulation flowsheet for the hydrothermal separation (HTS) process. In this process, raw sugarcane bagasse is introduced via the HTSBIOM stream, defined according to the proximate and ultimate analysis data provided in Table 1. The mass flow rate of this stream is 100 kg/h at 25 °C and 1 bar. Note that the HTSBIOM stream is active only in Model 2.

The MAKUPH2O stream supplies water at a mass flow rate of 900 kg/h, also at 25 °C and 1 bar. These two streams are combined in the MIXER2 block to form a slurry with a total flow rate of 1000 kg/h. The slurry is then pressurized to 20 bar using PUMP-2 and heated to 195 °C in the HEATER1 block to meet the operating conditions required for the hydrothermal separation reactor (HTSR). The HTSR block is modeled as a batch reactor operating at 20 bar and 195 °C, processing a total mass flow of 1000 kg/h. The reactor executes predefined reactions with known stoichiometry and kinetics, as detailed in Table 2 and Figure 3. Within the HTSR, hydrolysis reactions depolymerize hemicellulose and cellulose from the biomass, producing their respective oligomers and sugar monomers. These soluble products exit the reactor with the process water. The mixture then passes through the HX heat exchanger, where it exchanges heat with the S202 stream. Solid residues are separated from the liquid stream using a solid-liquid separator (S-SEP2). The

process water, now containing dissolved hemicellulose- and cellulose-derived products proceeds to filtration units.

Finally, the hydrolysis products are recovered from the process water through sequential filtration steps using a vacuum filter (V-FILTER) and FILTER3, which respectively separate the yields of cellulose- and hemicellulose-derived components.

2.5.3. Model 3: Coupling of HC and HTS Process

In Figure 4, the red-dotted area represents the coupling of hydrodynamic cavitation and hydrothermal separation processes. The coupled process has two units: hydrodynamic cavitation (HC) and hydrothermal separation (HTS). The process starts with mixing the BIOMASS stream with the H2O stream by MIXER1 block in the HC section. The raw Sugarcane Bagasse was defined in the BIOMASS stream based on the proximate and ultimate analysis data in Table 1, with a mass flow rate of 100 kg/h, 25 °C, and 1 bar. The mass flow rate of water was 900 kg/h, 25 °C, and 1 bar. The slurry of 1000 kg/h in the S101 stream then passes through the PUMP-1 by maintaining a pressure of 3 bar and HEATER1 block to increase the temperature to 60 °C for the HC reactor. The HC reactor (HCR block) converts the biomass into lignin, extractives, cellulose, and hemicellulose contents, as mentioned in Model 1. The HC process was operated at an inlet pressure of 3 bar, a temperature of 60 °C with a total mass flow rate of 1000 kg/h. In the coupled process, the yield of lignin and extractive contents were separated from the process water after the filtration in the FILTER and FFILTER2 blocks.

Meanwhile, the MIXER-2 block of the HTS section mixed the solid residue (S-RESDU1) after the HC unit, HC-W-H2O stream, and MAKUPH2O stream. The MAKUPH2O stream adds water to maintain a total mass flow of 1000 kg/h. The slurry in S201 was then pumped and heated using the PUMP2 and HEATER2 blocks for the HTS reactor, respectively. The HTS reactor and its operating conditions remained the same as in Model 2. Finally, the yield of hemicellulose and cellulose components was separated from the process water after the filtration in V-FILTER and FILTER3 blocks, and the residual biomass was separated by a solid separator (S-SEP2).

2.6. Process Analysis

2.6.1. Analysis of Simulated Models

A performance analysis was conducted to compare the effectiveness of the three process models in terms of component yield and overall separation efficiency for sugarcane bagasse. The overall separation efficiency (OSE) is the percentage of biomass separated during the process from the initial feed, as shown in Equation (5).

$$\text{OSE} = \frac{\dot{m}_{feed} - \dot{m}_{untreated}}{\dot{m}_{feed}} \times 100\% \quad (5)$$

Here, OSE = Overall separation efficiency (%), $\dot{m}_{feed}$ = Mass flow rate of feed biomass (kg/h), $\dot{m}_{untreated}$ = Mass flow rate of residual untreated biomass after the process (kg/h). However, the process parameters that were considered in the simulation of each model are displayed in Table 3.

2.6.2. Sensitivity Analysis of the Coupled Process

A sensitivity analysis was performed to understand how individual process parameters affect the component yield and overall separation efficiency of the HC-HTS coupled process (Model 3). Several process parameters can affect efficiency and component yield, including HC reactor temperature, pressure, reaction time, solid-to-liquid (S/L) ratio, HTS reactor temperature, pressure, and reaction time. The analysis focused on parameters

such as S/L ratio, HTS reactor temperature, pressure, and reaction time. In contrast, the parameters for the HC reactor (HC reactor temperature of 60 °C, inlet pressure of 3 bar, and reaction time of 20 min) remained unchanged throughout the study because the HC reactor was considered an RYield reactor, which is a predefined yield reactor and does not use reaction stoichiometry or reaction kinetics [31]. However, the analysis encompassed variations in HTS reactor temperatures across six levels (170, 180, 190, 200, 210 and 220 °C), three S/L ratios (5%, 10% and 15%), six HTS reaction times (1, 5, 10, 15, 20, and 25 min), and five HTS pressures (10, 15, 20, 25 and 30 bar).

Table 3. Considered process parameters during process simulation.

Process Parameters	Unit	Value
Mass Flow Rate	kg/h	1000
Solid-to-Liquid (S/L) ratio	%	10
HC Reactor		
Reactor Inlet Pressure [a]	bar	3
Reactor Temperature [a]	°C	60
Reaction Time [a]	min	20
HTS Reactor		
Reactor Pressure	bar	20
Reactor Temperature	°C	195
Reaction Time	min	20

a = Adopted from Teran et al. [28].

2.6.3. Optimization of the Coupled Process

Response surface methodology (RSM) was used to optimize the process parameters of the HC-HTS coupled process (Model 3), aiming for the maximum overall separation efficiency. Four independent variables were studied: HTS temperature, HTS reaction time, HTS pressure, and S/L ratio. The HC parameters, including HTS inlet pressure, reaction time, and pressure, were not optimized as the HC reactor considered the RYield block, which is a predefined yield-based reactor block and does not use any reaction kinetics or stoichiometry. However, the HC parameters can also be optimized further during the experimentation of this coupled process. The range of the independent variables during optimization in this study was considered as follows: HTS temperature of 170–220 °C, HTS reaction time of 5–25 min, HTS pressure of 10–30 bar, and S/L ratio of 5–15%. Central Composite Design (CCD) designed 26 simulation trials of the four variables using the Minitab® statistical software, version 22 (trial) (State College, PA, USA). The overall separation efficiency was calculated as a response variable for the sugarcane bagasse as the feed biomass in each run.

3. Results and Discussions

3.1. Model Validation

All the process models in this study were developed using the built-in blocks from the Aspen Plus V11 software, as described in Section 2.5. Since the HC-HTS coupled process (Model 3) integrated the HC and HTS processes, there were limitations for the experimental studies of the HC-HTS coupled process. Thus, for the validation of the model, this study compared each of the HC (Model 1) and HTS processes (Model 2) separately with experimental data from the literature regarding component yield and overall separation efficiency, as shown in Table 4. As the HC process is mainly used for the delignification of biomass, results in Table 4 show that Model 1 exhibits lignin removal of 48.31% from the sugarcane bagasse with an overall separation efficiency of 23.56%, which was validated by several studies [6,32,33]. The process conditions for the HC model were temperature

of 70 °C, pressure of 3 bar and reaction time of 20 min. The deviation between Model 1 and experimental data is approximately 6% for the lignin removal and less than 2% for the overall extraction efficiency, representing excellent agreement with the experimental values.

Table 4. Validation of Model 1 and Model 2 with experimental data.

	HC Process				HTS Process			
	[6]	[32]	[33]	**This Study: Model 1**	[19]	[20]	[18]	**This Study: Model 2**
Biomass	Reed	Sugarcane bagasse	Corncob	Sugarcane bagasse	Corn Strover	Sugarcane bagasse	Sugarcane straw	Sugarcane Bagasse
Temperature, °C	77	55	30	60	190	195	195	195
Pressure, bar	5	3	0.5	3	-	-	-	20
Reaction time, min	41.1	30	60	20	-	-	10	20
Biomass loading	11.8% (*w*/*v*)	-	5% (*w*/*v*)	10% (*w*/*v*)	10% (*w*/*v*)	1:10 (*w*/*v*)	1:10 (*w*/*v*)	10% (*w*/*v*)
Reactor type	Orifice	Orifice	Orifice	RYield	Tube reactor	High-pressure reactor	High-pressure reactor	RBatch
Overall separation efficiency, %	23.6	22.81	-	23.56	28.88 [a]	-	26.53 [a]	31.31
Lignin removal, %	42.3	41.83	47.44	48.31	-	-	-	-
Cellulose removal, %	-	-	-	-	12.19	21	9.80	22.4
Hemicellulose removal, %	-	-	-	-	83.7	85	85.45	86.03

a: efficiency calculation considered only hemicellulose and cellulose degradation in the HTS reactor.

The results for Model 2 in Table 4 show that the hemicellulose and cellulose degradation during the HTS process for sugarcane bagasse was 86.03% and 22.4%, respectively, which are close to the yield data in experimental conditions [18–20]. The overall separation efficiency also showed approximately the same range in the mentioned studies at the process conditions of 195 °C temperature, 15 bar pressure and 20 min of reaction time. The deviation between Model 2 and experimental data for hemicellulose, cellulose removal and overall extraction efficiency was approximately 2.5%, 8% and 4.5%, respectively, which presents excellent agreement with the experimental values. However, the cellulose degradation rate was reported higher in some other experimental conditions in the study by G. Batista et al. [18].

3.2. Mass Balance and Analysis of Simulation Models

The detailed mass flow rate in the streams of the HC-HTS coupled process is shown in Figure 5. The sugarcane bagasse was used as feed biomass in the inlet stream, and the biomass was defined as a non-conventional component according to the proximate and ultimate analysis in Table 1. The mass flow rate of feeding biomass was 100 kg/h with an ash content of 1.09%, according to Table 1. The ash content in this model was considered inert in the feed biomass or residual biomass. The mass balance during the HC reactor was based on proximate and ultimate analysis data at the inlet and the elemental composition and molecular weight of yield content downstream of the HC reactor [21]. The HC reactor was considered an RYield reactor block with a predefined yield, as mentioned in Section 2.3. The HC reactor has two processes downstream; one carries the residual biomass with a flow rate of 76.44 kg/h, and another stream, process water, has a total flow rate of 923.56 kg/h. The separator was considered ideal, separating the lignin content of 11.38 kg/h and extractive content of 5.34 kg/h from the process water. After the HC reactor, the residual biomass goes to the HTS reactor by mixing with the wastewater from the HC process and making up water to maintain the overall mass flow rate of 1000 kg/h. The HTS reactor separated the cellulose and hemicellulose content, as mentioned in Section 2.4. The hemicellulose and cellulose content after the HTS reactor were 22.64 kg/h and 8.65 kg/h for the process conditions mentioned in Table 3.

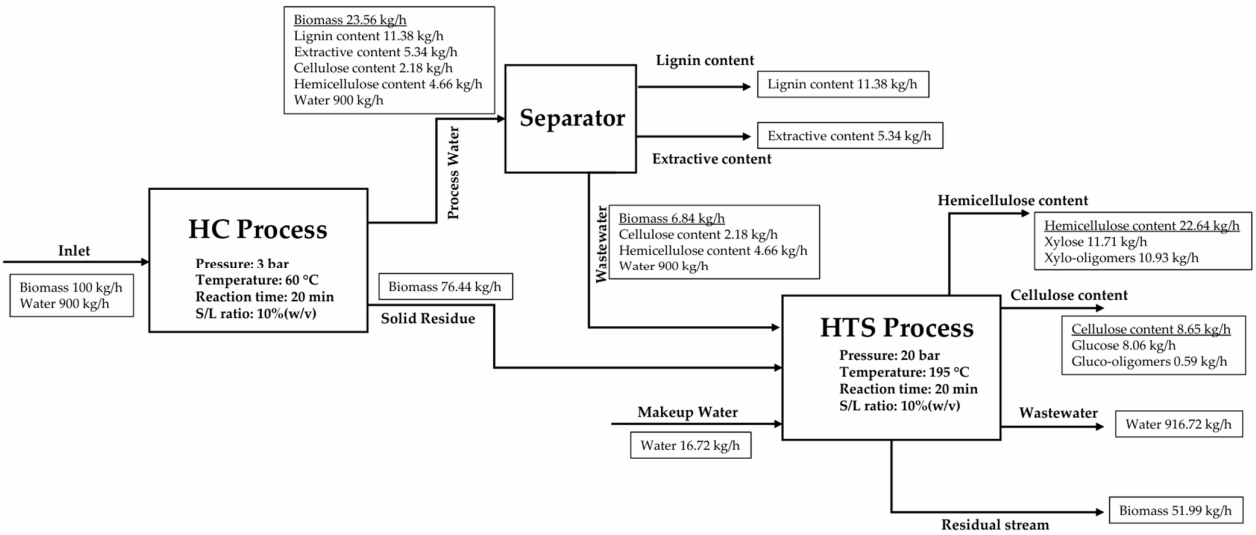

Figure 5. Mass flow rate in the different streams of HC-HTS coupled process.

The comparison of the three process models in terms of overall separation efficiencies is shown in Figure 6. Model 1 achieved an overall separation efficiency of 23.56%, Model 2 achieved 31.31%, and Model 3 as 48.06%. Among all the models, Model 3 demonstrated the highest overall separation efficiency. Results show Model 3 has approximately twofold efficiency compared to a single HC process and 16.75% higher efficiency than a single HTS process, indicating that coupling the HC and HTS process (Model 3) is more effective in separating components than the individual process models. The increased overall efficiency of the HC-HTS coupled process can be attributed to the cavitation effects in the HC reactor that break down the lignin structure, increase the porosity, and enhance mass transfer to the HTS reactor [6,7].

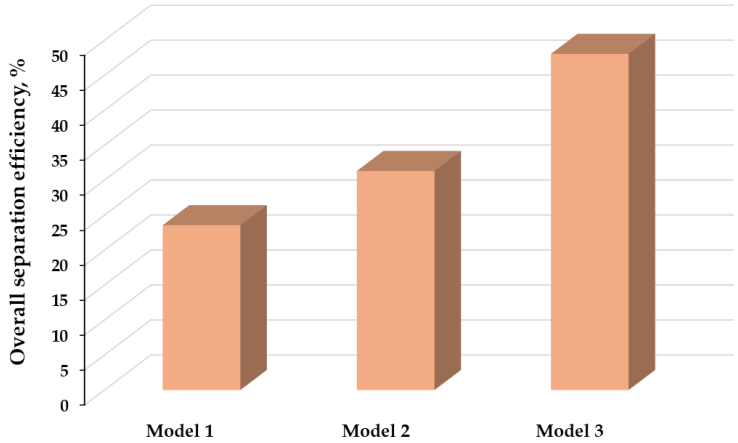

Figure 6. Comparison of overall separation efficiency for Model 1: HC process, Model 2: HTS process and Model 3: HC-HTS coupled process.

Finally, it can be concluded that the coupling of the HC and HTS processes (Model 3) can be used to better utilize biomass with a higher overall separation efficiency than that of the individual processes (Models 1 and 2). It can extract valuable components such as extractives and biopolymers from the lignocellulosic matrix to produce raw materials for biofuel, biochemicals, and biomaterials.

3.3. Sensitivity Analysis

This section demonstrates the results and findings of the sensitivity analysis of the HC-HTS coupled process (Model 3) for sugarcane bagasse. The goal is to observe how the temperature, pressure, reaction time of the HTS reactor, and solid-to-liquid (S/L) ratio affect the component yield and overall separation efficiency. The temperature, pressure, and reaction time of the HTS reactor herein are referred to as the HTS temperature, HTS pressure, and HTS reaction time, respectively.

3.3.1. Effects of HTS Temperature

In Figure 7a, the vertical bar chart shows the effect of HTS temperature on component yield and overall separation efficiency for sugarcane bagasse. The temperature changed between 170 and 220 °C while the other process parameters remained the same: S/L ratio of 10%, HTS pressure of 20 bar, and HTS reaction time of 20 min. The x-axis represents the HTS temperature in degrees Celsius (°C), and the left and right y-axis shows the component yield in kg/h and overall separation efficiency in percentage, respectively.

Results show that the yield of cellulose content increased from 1.92 kg/h at 170 °C to 38.60 kg/h at 220 °C and the yield of hemicellulose content increased from 9.82 kg/h at 170 °C to 26.37 kg/h at 220 °C. With increasing the HTS temperature, cellulose content shows an upward trend in yield. Up to 200 °C, a lower yield rate was observed, which became more than threefold at 220 °C, which indicated that the cellulose depolymerized more at high temperatures is likely associated with the structure of cellulose [4]. On the other hand, the yield of hemicellulose content was higher even at lower temperatures (180 °C). It gradually increased with temperature, which can be attributed to its lower activation energy [20] and a lower degree of polymerization [5]. Meanwhile, the yield of lignin and extractive content was constant at 11.38 kg/h and 5.34 kg/h over the temperature range, indicating that the HTS temperature did not affect lignin and extractive yield in the coupled process (Model 3).

The overall separation efficiency showed a clear upward trend with HTS temperature. Specifically, a nearly threefold increase in efficiency was observed at 220 °C, which was 28.46% at 170 °C, which can be due to the higher degradation of cellulose and hemicellulose at higher temperatures, leading to a more efficient valorization.

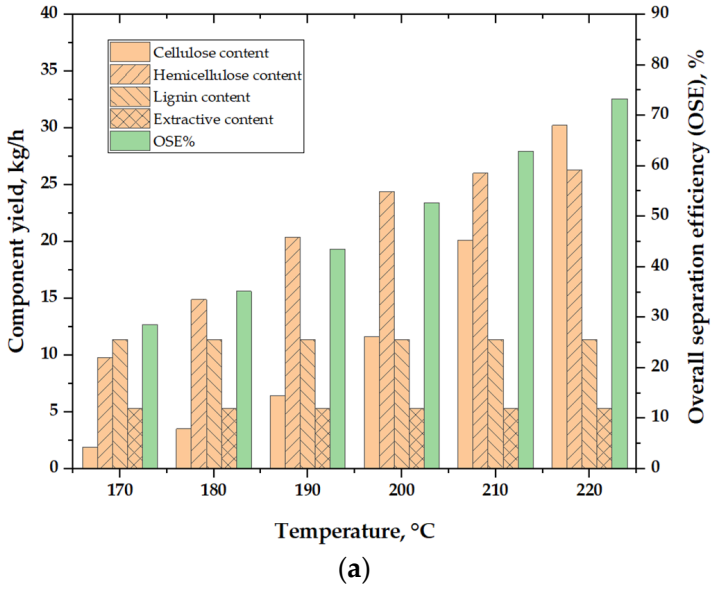

(**a**)

Figure 7. *Cont.*

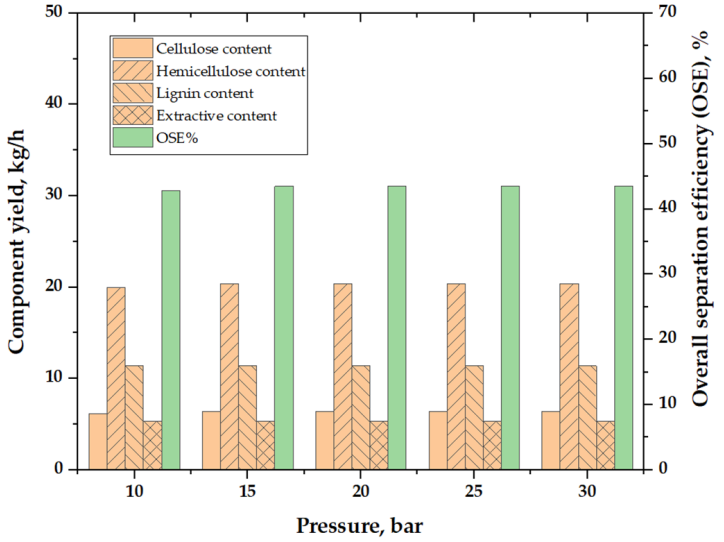

(**b**)

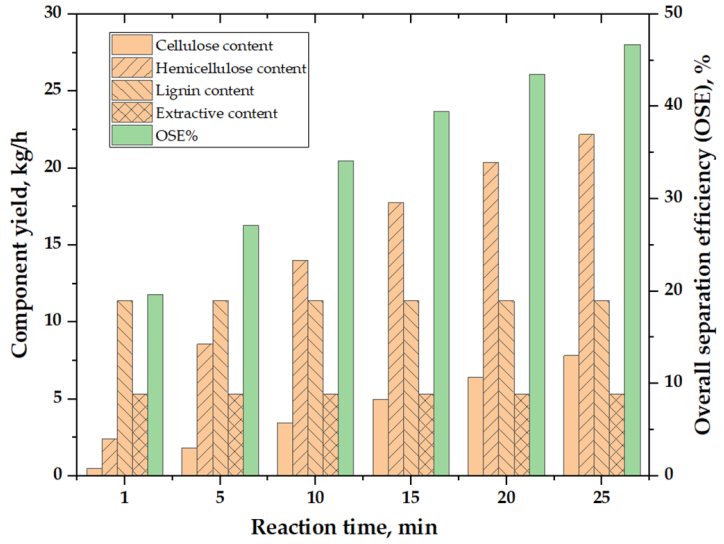

(**c**)

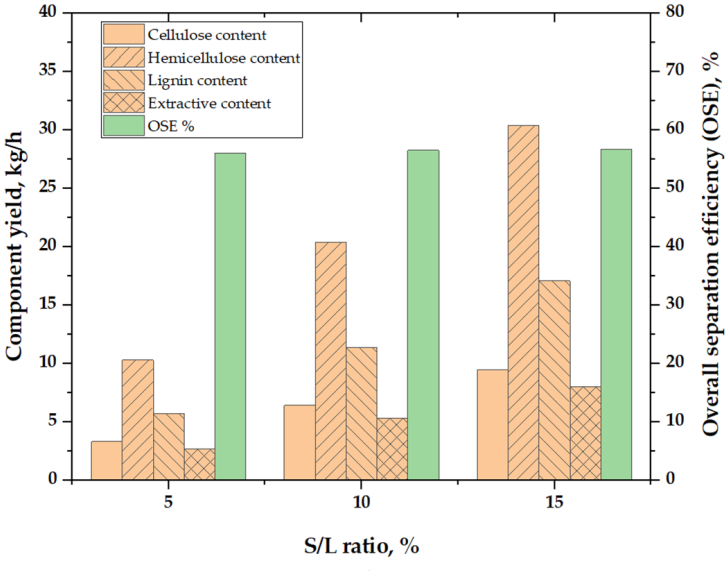

(**d**)

Figure 7. Effects of- (**a**) HTS temperature, (**b**) HTS pressure, (**c**) HTS reaction time, and (**d**) S/L ratio on component yield and overall separation efficiency.

3.3.2. Effects of HTS Pressure

The bar chart in Figure 7b shows the effect of HTS pressure on component yield and overall separation efficiency for sugarcane bagasse. The pressure was changed between 5 and 30 bar while holding the other parameters: S/L ratio of 10%, HTS temperature of 190 °C and HTS reaction time of 20 min. The x-axis represents the HTS pressure in the bar, and the left and right y-axis shows the component yield in kg/h and overall separation efficiency in percentage, respectively.

At 10 bar pressure, the yield of cellulose, hemicellulose, lignin, and extractive content was 6.13 kg/h, 19.88 kg/h, 11.38 kg/h, and 5.34 kg/h, respectively, with an overall separation efficiency of 42.73%. Results show all the component yield and overall separation efficiency remained approximately the same up to 30 bar, which suggested that the pressure change did not significantly impact the hydrolysis and depolymerization of cellulose and hemicellulose in the HTS reactor, as HTS is mainly a high-pressure thermal reactor [12].

3.3.3. Effects of HTS Reaction Time

In Figure 7c, the bar chart shows the effect of HTS reaction time on component yield and overall separation efficiency for sugarcane bagasse. The HTS reaction time was changed between 1 and 25 min while the other parameters remained the same: S/L of 10%, HTS temperature of 190 °C, and HTS pressure of 20 bar. The x-axis represents the HTS reaction time in min, and the left and right y-axis shows the component yield in kg/h and overall separation efficiency in percentage, respectively.

The results show that the yield of hemicellulose content increased from 2.41 kg/h at 1 min to 23.44 kg/h at 25 min, and the yield of cellulose content increased from 0.47 kg/h at initial to 9.15 kg/h at final. The yield of hemicellulose drastically changed to approximately fourfold from 1 min to 5 min. Afterward, the yield content increased gradually up to the end. The yield of cellulose content was notably lower at lower reaction time. It gradually increased and reached a maximum at the end, indicating that longer reaction time improves hydrolysis of hemicellulose and cellulose, resulting in higher yield [34]. Notably, hemicellulose consistently showed a higher yield than cellulose at each point of reaction time, which is more likely associated with the structure, activation energy, and lower degree of polymerization of hemicellulose [4,5,20]. Conversely, the yield of lignin and extractives remained unchanged over HTS reaction time, suggesting that these two components were not affected by HTS reaction time as they are considered to be separated after the HC process.

Moreover, the overall separation efficiency increased gradually with HTS reaction time. The maximum overall separation efficiency was observed at 49.31% at 25 min of reaction time. Since cellulose and hemicellulose degradation increased with reaction time, this increased the overall separation efficiency.

3.3.4. Effects of Feedstock S/L Ratio

The bar chart in Figure 7d shows the effect of the feedstock solid-to-liquid (S/L) ratio on component yield and overall separation efficiency for sugarcane bagasse. The S/L ratio was changed three times (5%, 10% and 15%), while the other parameters remained hold: HTS temperature of 190 °C, HTS pressure of 20 bar, and HTS reaction time of 20 min. The x-axis represents the S/L ratio in percentage, and the left and right y-axis show the component yield in kg/h and overall separation efficiency in percentage, respectively.

Results show that the yields of cellulose, hemicellulose, lignin and extractive contents were 3.31 kg/h, 10.29 kg/h, 5.69 kg/h and 2.67 kg/h, respectively, at an S/L ratio of 5%. By increasing the S/L ratio, all the components show an upward trend in yield, which suggests that a higher solid loading of biomass results in a higher component yield. However, solid

loading of less than 30% (*w*/*v*) is usually more advantageous in terms of efficacy because of the comparatively high rate of mass transfer and mixing effect [6], and the solid loading should be limited according to the utilized process for different biomass [30].

Moreover, the overall separation efficiency was 56.06% at an S/L ratio of 5%. It remained approximately the same at the maximum S/L ratio, which indicated that the overall separation efficiency does not vary for the same type of feed biomass. However, changes would occur with the choice of biomass and its composition [34].

3.4. Process Optimization

3.4.1. Statistical Analysis and Response Model

The overall separation efficiency was considered as a response variable in the numerical model (Aspen Plus model) and quadratic model (statistical model) at different process conditions that are shown in Table 5. The results showed that among 26 combinations of process parameters, the overall separation efficiency (OSE) predicted by the numerical model varied between 26.21% and 68.87% for sugarcane bagasse. The maximum efficiency obtained by the numerical model was 68.87% at the 10th run (S/L ratio 10%, HTS temperature 220 °C, HTS reaction time 15 min, and HTS pressure of 20 bar).

Table 5. Central Composite Design (CCD) matrix and response values for three biomass feedstocks in the coupled process.

Run no.	Temperature, °C	Reaction Time, min	Pressure, bar	S/L Ratio, %	Overall Separation Efficiency (OSE), %	
					Numerical Model	Quadratic Model
1	207.5	10	25	12.5	48.8733	48.8909
2	207.5	10	25	7.5	46.4591	47.0059
3	195.0	15	20	10.0	43.7905	43.7905
4	182.5	20	25	12.5	37.0453	37.1190
5	207.5	20	15	7.5	55.5814	56.9240
6	182.5	20	15	7.5	35.1894	36.0625
7	207.5	20	25	12.5	60.0262	60.5084
8	170.0	15	20	10.0	26.2098	26.1680
9	195.0	15	20	15.0	43.4494	44.3352
10	182.5	10	15	12.5	29.2374	28.6709
11	195.0	15	20	5.0	43.7905	41.2448
12	207.5	20	15	12.5	59.6850	60.0897
13	207.5	10	15	12.5	48.5026	48.3304
14	207.5	20	25	7.5	56.1323	57.5896
15	195.0	15	10	10.0	43.0214	42.2474
16	182.5	20	25	7.5	35.2191	36.1605
17	195.0	15	20	10.0	43.7905	43.7905
18	182.5	10	25	12.5	29.2372	28.6638
19	207.5	10	15	7.5	45.3813	46.1984
20	195.0	5	20	10.0	29.6019	30.0107
21	195.0	25	20	10.0	51.2602	49.1915
22	182.5	10	15	7.5	28.2123	28.4992
23	182.5	10	25	7.5	28.2529	28.7390
24	220.0	15	20	10.0	68.8747	67.2566
25	182.5	20	15	12.5	37.0455	37.2678
26	195.0	15	30	10.0	43.7919	42.9059

Based on parameter estimates, the application of response surface methodology offered an empirical relationship between the response and test variables. By employing multiple regression analysis on the simulated data, the predicted response Y for the overall separation efficiency can be obtained by the following quadratic model (Equation (6)):

$$Y = 103 - 1.393X_1 - 0.43X_2 + 0.15X_3 - 2.16X_4 + 0.00467{X_1}^2 - 0.04189{X_2}^2 - 0.01214{X_3}^2 - 0.0400{X_4}^2 + 0.01265 X_1X_2 + 0.00227\, X_1X_3 + 0.01568\, X_1X_4 - 0.0014\, X_2X_3 + 0.0207\, X_2X_4 - 0.0049\, X_3X_4 \quad (6)$$

where Y is the overall separation efficiency (%) for sugarcane bagasse, X_1 is the HTS temperature, X_2 is the HTS reaction time, X_3 is the HTS pressure, and X_4 is the S/L ratio.

An ANOVA test was performed to check the significance of the quadratic model by Minitab® statistical software, and the results are shown in Table 6. The ANOVA of the quadratic model demonstrated that the model was highly significant, with the coefficient of determination (R^2) being 0.9926, indicating that the model could account for 99.26% of the variability in the response variable within the range of the variables tested. As demonstrated in Table 5, model quality can also be assessed by comparing the numerical and statistical values for sugarcane bagasse. However, the *p*-values serve as a tool to evaluate the significance of each coefficient, thereby suggesting the interaction strength among every independent variable. The related coefficient is more important if the *p*-value is smaller [35]. The model terms are significant when the *p*-value is less than 0.05. Table 6 shows that the terms X_1, X_2, X_4, X_1^2, X_2^2, and X_1X_2 are highly significant, with *p*-values less than 0.05.

Table 6. Analysis of variance (ANOVA) to determine a quadratic model of the response variable for sugarcane bagasse.

Source	DF	Adj SS	Adj MS	F-Value	*p*-Value	
Model	14	3169.73	226.41	152.80	0.000	
Linear	4	3099.24	774.81	522.91	0.000	
X_1	1	2532.42	2532.42	1709.10	0.000	Significant
X_2	1	551.85	551.85	372.44	0.000	Significant
X_3	1	0.65	0.65	0.44	0.517	
X_4	1	14.33	14.33	9.67	0.007	Significant
Square	4	55.17	13.79	9.31	0.000	
X_1^2	1	15.26	15.26	10.30	0.005	Significant
X_2^2	1	31.37	31.37	21.17	0.000	Significant
X_3^2	1	2.63	2.63	1.78	0.201	
X_4^2	1	1.79	1.79	1.21	0.288	
2-Way Interaction	6	15.31	2.55	1.72	0.180	
X_1X_2	1	10.00	10.00	6.75	0.019	Significant
X_1X_3	1	0.32	0.32	0.22	0.647	
X_1X_4	1	3.84	3.84	2.59	0.127	
X_2X_3	1	0.02	0.02	0.01	0.909	
X_2X_4	1	1.07	1.07	0.72	0.408	
X_3X_4	1	0.06	0.06	0.04	0.842	
Error	16	23.71	1.48			
Lack-of-Fit	10	23.71	2.37			
Pure Error	6	0.00	0.00			
Total	30	3193.44				

3.4.2. Response Surface Plot

A 3D response surface plot is a graphical representation of a regression equation used to visualize the relationship between the response variable and two predictor variables. The plot helps identify the process parameters' main and interaction effects on the response variable, optimizing the process conditions [35]. Figure 8 shows the effect of HTS temperature, HTS pressure, HTS reaction time, and S/L ratio on overall separation efficiency (OSE). Results in Figure 8a–f show that by holding other parameters at a certain level, the increment of HTS temperature and HTS reaction time had higher effects on overall separation efficiency than the HTS pressure and S/L ratio. Meanwhile, the interactional effects of the two parameters show that increasing the HTS temperature and HTS reaction time together (Figure 8a) increases overall separation efficiency more than other interactions, which also validated the response model.

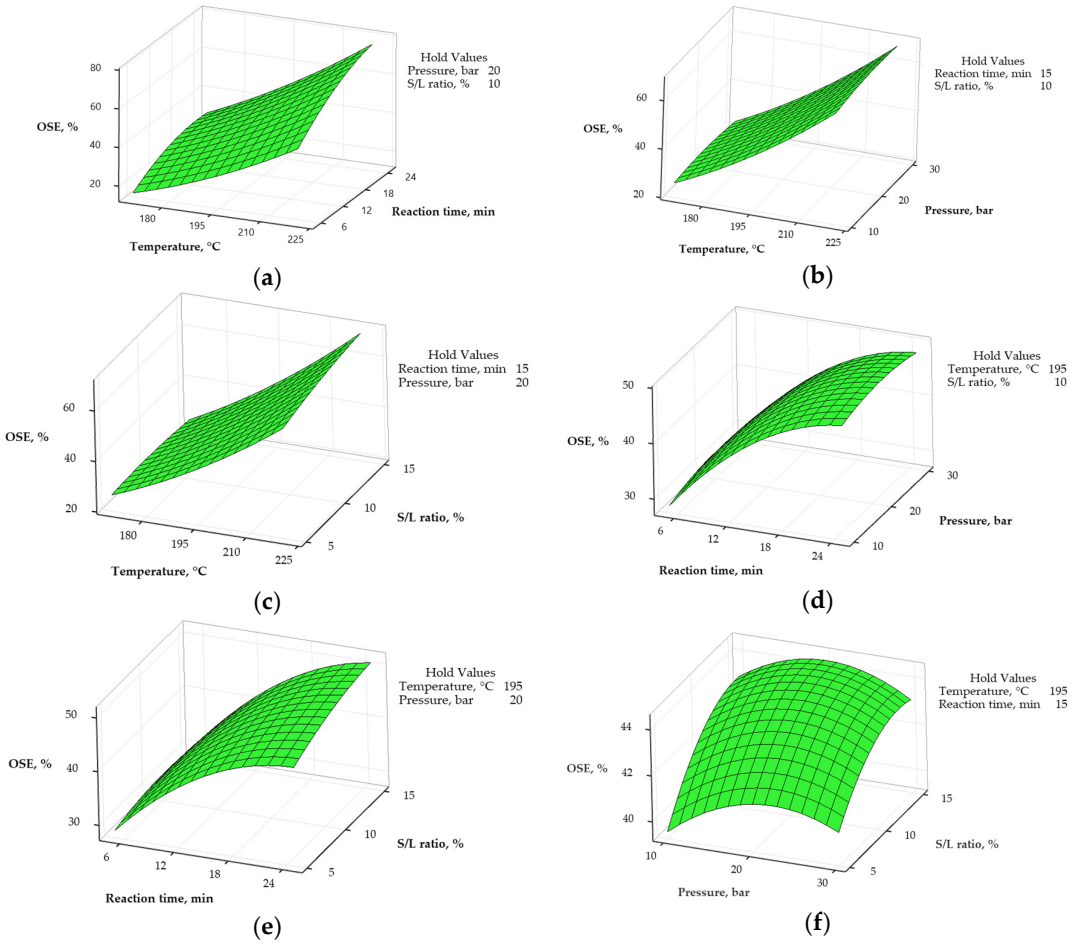

Figure 8. Response surface plot (**a**–**f**) showing the effect of HTS temperature, HTS pressure, HTS reaction time, and S/L ratio on overall separation efficiency (OSE).

3.4.3. Optimization of Parameters for Maximum Overall Separation Efficiency

The overall separation efficiency as a response variable was optimized using Minitab® statistical software to maximize efficiency. At optimized conditions (HTS temperature of 220 °C, HTS reaction time of 25 min, HTS pressure of 22.12 bar, S/L ratio of 15%, HC temperature of 60 °C, HC pressure of 3 bar, and HC reaction time of 20 min), the quadratic model predicted an overall separation efficiency of 79.41 ± 2.71% for sugarcane bagasse, which Aspen Plus simulation confirmed of 75.85%. In optimal conditions, the yield of hemicellulose, cellulose, lignin, and extractives contents was 39.47 kg/h, 49.23 kg/h, 17.073 kg/h, and 8.016 kg/h, respectively, for biomass feed of 150 kg/h, and total mass flow rate of 1000 kg/h.

3.5. Limitations of the Study

This study solely focused on the simulation-based analysis of the HC-HTS coupled process. During simulation, the physical changes of biomass, like porosity, microstructure, and the characterization of residual biomass, were not reflected. The experimentation of the HC-HTS coupled process can address these limitations, where the yield content after the pretreatment process could be identified by the High-Performance Liquid Chromatography (HPLC) method [36] and Scanning electron microscopy (SEM) for biomass characterization [37]. Furthermore, this study only considered the yield of orifice-type HC reactors during coupling; there is scope for changing the HC reactor type during coupling. Moreover, the practical implementation of the HC-HTS coupled process can face cavitation

erosion, clogging, reactor fouling in the HC reactor [38], and high temperature and pressure control problems in the HTS reactor.

4. Conclusions

This study presents a conceptual design of a coupling process of hydrodynamic cavitation and hydrothermal separation, a first-time simulation-based integration of the HC-HTS process, to efficiently valorize lignocellulosic biomass into lignin, cellulose, hemicellulose, and extractives contents. The simulation results emphasize the considerable enhancement in overall separation efficiency achieved by coupling the processes. Specifically, this coupling increased separation efficiency by 24.5% and 16.75% compared to individual HC and HTS processes, respectively, for sugarcane bagasse. The effects of process parameters on the HC-HTS coupled process showed that the HTS temperature and reaction time had increased effects on component yield and overall separation efficiency. Similarly, the increase in the S/L ratio demonstrated a higher component yield, including lignin and extractives contents, in the process downstream, whereas the efficiency remained approximately the same. The effect of the HTS pressure was negligible on component yield and overall separation efficiency. Moreover, this study identified the optimal process parameters of the coupled process as a solid-to-liquid (S/L) ratio of 15%, HC pressure of 3 bar, HC temperature of 60 °C, HC reaction time of 20 min, HTS temperature of 220 °C, HTS reaction time of 25 min, and HTS pressure of 22.22 bar. At the optimal conditions, the quadratic model predicted an overall separation efficiency of 79.41 $\pm$ 2.71% for sugarcane bagasse, which the Aspen Plus simulation confirmed as 75.85%. The coupling process employs water as in the process, making it an environmentally friendly option for optimizing biomass resources and minimizing waste production.

Author Contributions: Conceptualization, S.R.; methodology, S.R.; software, M.B.A.; formal analysis, M.B.A.; investigation, M.B.A.; data curation, M.B.A.; writing—original draft preparation, M.B.A.; writing—review and editing, S.R.; visualization, M.B.A.; supervision, S.R.; funding acquisition, S.R. All authors have read and agreed to the published version of the manuscript.

Funding: This research was funded by Norwegian Directorate for Higher Education and Skills (HK-Dir), grant number [NORPART-2021/10355].

Data Availability Statement: All data supporting the findings of this study are available from the corresponding author upon reasonable request.

Acknowledgments: This study was conducted at the Department of Engineering Sciences, Faculty of Engineering and Science, University of Agder. We greatly acknowledge the financial support provided by the NORPART-2021/10355 project, funded by HK-Dir, which facilitated student scholarships.

Conflicts of Interest: The authors declare no conflicts of interest.

Abbreviations

The following abbreviations are used in this manuscript:

HC	Hydrodynamic Cavitation
HTS	Hydrothermal Separation
LCB	Lignocellulosic Biomass
RSM	Response Surface Methodology
CCD	Central Composite Design
OSE	Overall Separation Efficiency (%)
$\dot{m}_{feed}$	Mass flow rate of feed biomass (kg/h)
$\dot{m}_{untreated}$	Mass flow rate of residual untreated biomass after the process (kg/h)

References

1. Lu, Y.C.; Lu, Y.; Lu, Z.L.; Wei, X.Y. Detailed Componential Characterization of Extractable Species with Organic Solvents from Wheat Straw. *Int. J. Anal. Chem.* **2017**, *2017*, 7305682. [CrossRef] [PubMed]
2. Tsegaye, B.; Balomajumder, C.; Roy, P. Microbial delignification and hydrolysis of lignocellulosic biomass to enhance biofuel production: An overview and future prospect. *Bull. Natl. Res. Cent.* **2019**, *43*, 51. [CrossRef]
3. Das, N.; Jena, P.K.; Padhi, D.; Kumar Mohanty, M.; Sahoo, G. A comprehensive review of characterization, pretreatment and its applications on different lignocellulosic biomass for bioethanol production. *Biomass Convers. Biorefinery* **2023**, *13*, 1503–1527. [CrossRef]
4. Ge, X.; Chang, C.; Zhang, L.; Cui, S.; Luo, X.; Hu, S.; Qin, Y.; Li, Y. *Conversion of Lignocellulosic Biomass Into Platform Chemicals for Biobased Polyurethane Application*, 1st ed.; Elsevier Inc.: Amsterdam, The Netherlands, 2018; Volume 3. [CrossRef]
5. Chen, H. *Biotechnology of Lignocellulose*; Springer: Dordrecht, The Netherlands, 2014. [CrossRef]
6. Kim, I.; Lee, I.; Jeon, S.H.; Hwang, T.; Han, J.I. Hydrodynamic cavitation as a novel pretreatment approach for bioethanol production from reed. *Bioresour. Technol.* **2015**, *192*, 335–339. [CrossRef]
7. Randhavane Shrikant, B.; Khambete, A.K. Hydrodynamic Cavitation: A Novel Treatment Approach. *Mater. Today Proc.* **2017**, *4*, 9680–9684. [CrossRef]
8. Ge, M.; Sun, C.; Zhang, G.; Coutier-Delgosha, O.; Fan, D. Combined suppression effects on hydrodynamic cavitation performance in Venturi-type reactor for process intensification. *Ultrason. Sonochem.* **2022**, *86*, 106035. [CrossRef]
9. Rudra, S.; Jayathilake, M. *5.08—Hydrothermal Liquefaction of Biomass for Biofuel Production*, 2nd ed.; Elsevier Inc.: Amsterdam, The Netherlands, 2022; Volume 1–5. [CrossRef]
10. Ralph, J.; Lapierre, C.; Boerjan, W. Lignin structure and its engineering. *Curr. Opin. Biotechnol.* **2019**, *56*, 240–249. [CrossRef]
11. Terán Hilares, R.; dos Santos, J.C.; Ahmed, M.A.; Jeon, S.H.; da Silva, S.S.; Han, J.I. Hydrodynamic cavitation-assisted alkaline pretreatment as a new approach for sugarcane bagasse biorefineries. *Bioresour. Technol.* **2016**, *214*, 609–614. [CrossRef]
12. Martín, C.; Dixit, P.; Momayez, F.; Jönsson, L.J. Hydrothermal Pretreatment of Lignocellulosic Feedstocks to Facilitate Biochemical Conversion. *Front. Bioeng. Biotechnol.* **2022**, *10*, 846592. [CrossRef]
13. Baxi, P.B.; Pandit, A.B. Using cavitation for delignification of wood. *Bioresour. Technol.* **2012**, *110*, 697–700. [CrossRef]
14. Preece, K.E.; Hooshyar, N.; Krijgsman, A.J.; Fryer, P.J.; Zuidam, N.J. Intensification of protein extraction from soybean processing materials using hydrodynamic cavitation. *Innov. Food Sci. Emerg. Technol.* **2017**, *41*, 47–55. [CrossRef]
15. Meneguzzo, F.; Brunetti, C.; Fidalgo, A.; Ciriminna, R.; Delisi, R.; Albanese, L.; Zabini, F.; Gori, A.; Nascimento, L.B.d.S.; De Carlo, A.; et al. Real-scale integral valorization of waste orange peel via hydrodynamic cavitation. *Processes* **2019**, *7*, 581. [CrossRef]
16. Albanese, L.; Bonetti, A.; D'Acqui, L.P.; Meneguzzo, F.; Zabini, F. Affordable production of antioxidant aqueous solutions by hydrodynamic cavitation processing of silver fir (Abies alba Mill.) needles. *Foods* **2019**, *8*, 65. [CrossRef] [PubMed]
17. Hamidi, R.; Damizia, M.; De Filippis, P.; Patrizi, D.; Verdone, N.; Vilardi, G.; de Caprariis, B. Recent developments and future outlooks of hydrodynamic cavitation as an intensification technology for renewable biofuels production. *J. Environ. Chem. Eng.* **2023**, *11*, 110819. [CrossRef]
18. Batista, G.; Souza, R.B.A.; Pratto, B.; dos Santos-Rocha, M.S.R.; Cruz, A.J.G. Effect of severity factor on the hydrothermal pretreatment of sugarcane straw. *Bioresour. Technol.* **2019**, *275*, 321–327. [CrossRef]
19. Zhou, W.; Yang, M.; Wang, C.; Liu, J.; Xing, J. Changes in plant cell-wall structure of corn stover due to hot compressed water pretreatment and enhanced enzymatic hydrolysis. *World J. Microbiol. Biotechnol.* **2014**, *30*, 2325–2333. [CrossRef]
20. dos Santos Rocha, M.S.R.; Pratto, B.; de Sousa, R.; Almeida, R.M.R.G.; Cruz, A.J.G. da A kinetic model for hydrothermal pretreatment of sugarcane straw. *Bioresour. Technol.* **2017**, *228*, 176–185. [CrossRef]
21. Ghavami, N.; Özdenkçi, K.; Chianese, S.; Musmarra, D.; De Blasio, C. Process simulation of hydrothermal carbonization of digestate from energetic perspectives in Aspen Plus. *Energy Convers. Manag.* **2022**, *270*, 116215. [CrossRef]
22. Parmar, P.; Mukherjee, S.; Kumar Singh, V.; Meikap, B.C. Thermo-kinetic analysis of sugarcane bagasse as a sustainable energy resource evaluation. *Therm. Sci. Eng. Prog.* **2024**, *54*, 102836. [CrossRef]
23. Wooley, R.J.; Putsche, V. *Development of an ASPEN PLUS Physical Property Database for Biofuels Components*; National Renewable Energy Laboratory: Golden, CO, USA, 1996. Available online: https://scispace.com/pdf/development-of-an-aspen-plus-physical-property-database-for-4u1k1wcwxb.pdf (accessed on 19 June 2025).
24. Ranzi, E.; Debiagi, P.E.A.; Frassoldati, A. Mathematical Modeling of Fast Biomass Pyrolysis and Bio-Oil Formation. Note I: Kinetic Mechanism of Biomass Pyrolysis. *ACS Sustain. Chem. Eng.* **2017**, *5*, 2867–2881. [CrossRef]
25. Cecílio, D.M.; Gonçalves, J.R.M.; Correia, M.J.N.; Mateus, M.M. Aspen Plus® Modeling and Simulation of an Industrial Biomass Direct Liquefaction Process. *Fuels* **2023**, *4*, 221–242. [CrossRef]
26. Gorensek, M.B.; Shukre, R.; Chen, C.C. Development of a Thermophysical Properties Model for Flowsheet Simulation of Biomass Pyrolysis Processes. *ACS Sustain. Chem. Eng.* **2019**, *7*, 9017–9027. [CrossRef]
27. Badve, M.; Gogate, P.; Pandit, A.; Csoka, L. Hydrodynamic cavitation as a novel approach for wastewater treatment in wood finishing industry. *Sep. Purif. Technol.* **2013**, *106*, 15–21. [CrossRef]

28. Terán Hilares, R.; Ienny, J.V.; Marcelino, P.F.; Ahmed, M.A.; Antunes, F.A.F.; da Silva, S.S.; Santos, J.C. dos Ethanol production in a simultaneous saccharification and fermentation process with interconnected reactors employing hydrodynamic cavitation-pretreated sugarcane bagasse as raw material. *Bioresour. Technol.* **2017**, *243*, 652–659. [CrossRef]
29. Sun, R.C.; Salisbury, D.; Tomkinson, J. Chemical composition of lipophilic extractives released during the hot water treatment of wheat straw. *Bioresour. Technol.* **2003**, *88*, 95–101. [CrossRef]
30. Liu, Z.H.; Ragauskas, A. *Emerging Technologies for Biorefineries, Biofuels, and Value-Added Commodities*; Springer Nature: Berlin/Heidelberg, Germany, 2021. [CrossRef]
31. Jaroenkhasemmeesuk, C.; Tippayawong, N.; Shimpalee, S.; Ingham, D.B.; Pourkashanian, M. Improved simulation of lignocellulosic biomass pyrolysis plant using chemical kinetics in Aspen Plus® and comparison with experiments. *Alex. Eng. J.* **2023**, *63*, 199–209. [CrossRef]
32. Terán Hilares, R.; de Almeida, G.F.; Ahmed, M.A.; Antunes, F.A.F.; da Silva, S.S.; Han, J.I.; Santos, J.C. dos Hydrodynamic cavitation as an efficient pretreatment method for lignocellulosic biomassA parametric study. *Bioresour. Technol.* **2017**, *235*, 301–308. [CrossRef]
33. Thangavelu, K.; Desikan, R.; Taran, O.P.; Uthandi, S. Delignification of corncob via combined hydrodynamic cavitation and enzymatic pretreatment: Process optimization by response surface methodology. *Biotechnol. Biofuels* **2018**, *11*, 203. [CrossRef]
34. Pronyk, C.; Mazza, G. Kinetic modeling of hemicellulose hydrolysis from triticale straw in a pressurized low polarity water flow-through reactor. *Ind. Eng. Chem. Res.* **2010**, *49*, 6367–6375. [CrossRef]
35. Qiao, D.; Hu, B.; Gan, D.; Sun, Y.; Ye, H.; Zeng, X. Extraction optimized by using response surface methodology, purification and preliminary characterization of polysaccharides from Hyriopsis cumingii. *Carbohydr. Polym.* **2009**, *76*, 422–429. [CrossRef]
36. Terán Hilares, R.; Kamoei, D.V.; Ahmed, M.A.; da Silva, S.S.; Han, J.I.; Santos, J.C. dos A new approach for bioethanol production from sugarcane bagasse using hydrodynamic cavitation assisted-pretreatment and column reactors. *Ultrason. Sonochem.* **2018**, *43*, 219–226. [CrossRef] [PubMed]
37. Jadhav, R.H.; Dey, A. Pre-Treatment and Characterization of Water Hyacinth Biomass (WHB) for Enhanced Xylose Production Using Dilute Alkali Treatment Method. *Water* **2025**, *17*, 301. [CrossRef]
38. Young, F.R. Hydrodynamic Cavitation. *Cavitation* **1999**, 187–317. [CrossRef]

Disclaimer/Publisher's Note: The statements, opinions and data contained in all publications are solely those of the individual author(s) and contributor(s) and not of MDPI and/or the editor(s). MDPI and/or the editor(s) disclaim responsibility for any injury to people or property resulting from any ideas, methods, instructions or products referred to in the content.