processes

MDPI

Article

Analysis of Process Intensification Impact on Circular Economy in Levulinic Acid Purification Schemes

Tania Itzel Serrano-Arévalo, Heriberto Alcocer-García *, César Ramírez-Márquez and José María Ponce-Ortega *

Chemical Engineering Department, Universidad Michoacana de San Nicolás de Hidalgo, Francisco J. Múgica S/N, Ciudad Universitaria, Morelia 58060, Michoacán, Mexico; 1129300h@umich.mx (T.I.S.-A.); cesar.ramirez@umich.mx (C.R.-M.)

* Correspondence: h.alcocer@ugto.mx (H.A.-G.); jose.ponce@umich.mx (J.M.P.-O.); Tel.: +52-443-3223500 (ext. 1277) (J.M.P.-O.)

Abstract

This study presents a comprehensive evaluation of levulinic acid purification schemes from a circular economy perspective, integrating resource-based indicators with economic and environmental metrics. Twelve alternatives, ranging from conventional distillation sequences to intensified hybrid systems, were assessed using indicators such as Relative Material Impact, total annual cost, Eco-Indicator 99, fuel demand, and CO_2 emissions. The novelty of this work lies in extending the assessment beyond purification infrastructure to include upstream systems that supply energy demand, such as fuel extraction and steam generation. The configurations considered incorporate thermal couplings, dividing wall columns, and decanters, which influence energy efficiency, process complexity, and resource depletion. Among these, the TDWS-D configuration (Thermally Coupled Double Dividing Wall Column System with Decanter) exhibits the highest values in DMR, TAC, and CO_2 emissions, driven by its elevated energy demand and complex infrastructure. Conversely, the TCS2 configuration (Thermally Coupled Sequence, featuring selective heat integration between distillation columns) achieves the lowest impact across all metrics, demonstrating that selective and strategic intensification (rather than maximalist design) can yield superior sustainability outcomes. Across all scenarios, the boiler stage was identified as the main contributor to material depletion, followed by fuel extraction and purification equipment. Notably, some conventional designs proved superior to intensified ones in terms of circularity, challenging the assumption that intensification inherently guarantees sustainability. Overall, the integration of circular economy indicators enables a multidimensional evaluation framework that supports more responsible and resource-efficient process design.

Keywords: intensification; circular economy; material requirements; simulation; levulinic acid

check for updates

Academic Editors: Dimitris Ipsakis and Andreas Yiotis

Received: 7 October 2025
Revised: 24 October 2025
Accepted: 30 October 2025
Published: 30 October 2025

Citation: Serrano-Arévalo, T.I.; Alcocer-García, H.; Ramírez-Márquez, C.; Ponce-Ortega, J.M. Analysis of Process Intensification Impact on Circular Economy in Levulinic Acid Purification Schemes. *Processes* **2025**, *13*, 3496. https://doi.org/10.3390/pr13113496

Copyright: © 2025 by the authors. Licensee MDPI, Basel, Switzerland. This article is an open access article distributed under the terms and conditions of the Creative Commons Attribution (CC BY) license (https://creativecommons.org/licenses/by/4.0/).

1. Introduction

Levulinic acid (LA), a versatile bio-based platform chemical, is used in a wide variety of applications. The extent of literature that references how LA can be converted into different chemicals is a sign of its potential. The industrial production development of LA from lignocellulosic biomass has sparked significant interest in LA as a low cost, high availability, and renewable origin [1]. Its functional capability makes it ideal to synthesize eco-friendly solvents, biofuels, biodegradable polymers, additives, and pharmaceuticals [2].

According to estimates, the global LA market reached USD 27.2 million in 2019, and between 2020 and 2030, it is expected to grow by 8% annually [2].

There are two common routes to the obtainment of LA. The first route involves acid hydrolysis of carbohydrates (such as glucose or cellulose). The second route is achieved through the dehydration of HMF to LA under severe conditions. These conditions can be either high temperatures or strong acids [3,4]. The yield of LA depends largely on the type of biomass, the catalyst, and the operating conditions used for its production. However, acid hydrolysis-based processes—whether homogeneous or heterogeneous—have consistently reported the highest yields. The Biofine process, for example, which uses homogeneous acid hydrolysis with H_2SO_4, achieves yields of up to 80% of the theoretical hexose-based value, with practical LA recoveries of up to 50% on a dry biomass basis [5]. Similarly, the use of heterogeneous catalysts in acid hydrolysis, such as WO_3-$ZnCo_2O_4$/CeO_2 applied to corn cob residues, has achieved yields of up to 78.5% under controlled conditions [6]. In contrast, alternative methods, such as microwave-assisted hydrolysis or one-pot catalytic routes, typically yield below 65% [7,8]. This evidence reinforces the conclusion that acid hydrolysis is the most effective and reproducible way to maximize the conversion of biomass into LA.

Once generated, LA forms a complex liquid mixture containing high concentrations of water and undesirable byproducts, which may include formic acid, furfural, and 5-hydroxymethylfurfural (HMF), among others [9,10]. The presence of these compounds not only complicates the purification of LA by traditional means, but they also create unwanted side reactions while being processed. This highly polar and reactive blend is one of the main challenges for the efficient and economical recovery of LA, especially if the aim is to obtain high levels of purity or quality grade LA suitable for chemical or pharmaceutical applications. Various strategies have been explored to efficiently separate and purify LA from complex mixtures derived from acid hydrolysis. One of the most studied strategies involves extraction with organic solvents, including n-butyl acetate, hexane, and 2-methyltetrahydrofuran (2-MeTHF). The latter has proven to be the most cost-effective, with a recovery cost 17% lower than n-butyl acetate and 32% lower than hexane. This has been achieved without compromising process efficiency [9]. Vacuum distillation, applied as a post-impurity removal step, has also proven effective in the concentration and purification of LA. In the case of sugarcane bagasse, for example, a recovery of 67.1% and a purity of approximately 78% have been achieved using ion exchange resins for pretreatment, followed by vacuum distillation at 130–140 °C [11]. In addition to these techniques, alternative approaches, which aimed at improving efficiency, reducing energy consumption, and avoiding the use of volatile organic solvents, have emerged. Reactive extraction, for instance, with tertiary amines such as trioctylamine (TOA), dissolved in diluents such as methyl isobutyl ketone (MIBK) or 1-octanol, has demonstrated a high separation capacity for LA and formic acid, thus significantly reducing the load in later stages [12,13]. Deep eutectic solvents (DES), particularly those based on trioctylphosphine oxide (TOPO), have also been proposed as green and selective alternatives to extract LA and other carboxylic acids from aqueous media [14]. Electrodialytic separation (ED), another emerging technique, is applied to levulinic solutions obtained by hydrolysis. This technique achieves recoveries between 88 and 99% [15].

Despite advances in emerging technologies, liquid–liquid extraction and distillation remain the predominant techniques in industrial compound purification, or LA purification, in this case. This is due to its operational robustness, scalability, and proven reliability in continuous processes. Overall, separation processes account for 40% to 90% of capital and operating costs in the chemical and processing industries. Among the available options, extraction and distillation continue to be the most widely adopted and dependable methods [16,17].

In the search for more efficient purification schemes for LA, intensified technologies that combine conventional processes with novel separation strategies have been developed and evaluated. Process Intensification (PI) refers to the development of innovative design approaches and unit operations that result in significantly smaller, cleaner, safer, and more energy-efficient processes. By integrating or redesigning conventional steps into hybrid or multifunctional systems, PI can enhance mass and heat transfer, reduce equipment size, minimize energy demand, and lower operating costs. These advantages make PI a powerful strategy not only for improving process performance but also for advancing sustainability objectives, as it reduces emissions and resource consumption [18,19]. Several recent studies have contributed to the development of intensified schemes to purify LA, improving technical, economic, and environmental efficiency. Brouwer et al. [13] introduced a reactive extraction system with TOPO in MIBK and a Temperature Swing Back Extraction stage that reduces the energy required for distillation from 31.5 to 11.3 GJ per ton of LA (plus an additional 4.5 GJ/t for heating).

In a multi-objective optimization strategy, Alcocer-García et al. [20] implemented dividing-wall columns with thermal couplings, achieving an 8.42% reduction in annual costs and a 10.94% decrease in the Eco-Indicator 99 index compared to conventional schemes. Errico et al. [2] explored advanced configurations such as LL-TE (Liquid–Liquid + Thermally Equivalent Column) and LL-SSC (Liquid–Liquid + Side Stream Column), demonstrating that a deep exploration of the design space facilitates the synthesis of economically competitive intensified alternatives. Solis-Sanchez et al. [3] presented a reactive distillation process that integrates reaction and separation in a single column, obtaining savings of 23% in equipment costs and 24% in thermal energy consumption compared to conventional systems. Tronci et al. [21] evaluated hybrid configurations that combine liquid–liquid extraction and enhanced distillation using split-wall columns, achieving an 11% reduction in total annual cost without compromising environmental performance. Alcocer-García et al. [22] have recently implemented a sequential methodology with multi-objective optimization (using differential evolution with a tabu list), where the intensified design with thermal coupling reached a total annual cost of USD 13.9 million, with savings of USD 4.6 million per year(~25%) and a reduction in environmental impact of 1.15×10^9 Eco-Indicator 99 points, representing a sustainable alternative for LA purification.

In the current transition toward more sustainable production systems, circular economy indicators have become essential tools to guide the design, evaluation, and optimization of industrial processes. These metrics emphasize the need to consider environmental, economic, and social impacts to effectively inform policies and industrial strategies. The growing diversity of such indicators highlights the increasing importance of incorporating circularity criteria for a more comprehensive sustainability assessment, particularly in chemical industries and bioprocesses [23]. In biodiesel production, Carvalho [24] applied closed- and open-path sustainability indicators (Material Value Added (MVA), Energy & Waste Cost (EWC), Total Value Added (TVA), and the Accumulation Factor (AF)) to identify inefficiencies. In the palm oil agro-industrial sector, Bejarano et al. [25] developed the Residue Recycling and Second-Use Material (RRSFM) and High-Carbon Residue Reuse Score (HCRRS) indicators, achieving recyclability of up to 72% and emission reductions between 57% and 83% depending on the waste. Kowalski et al. [26] assessed two industrial production methods for sodium tripolyphosphate (STPP) using a set of circular economy indicators. These included energy consumption per ton, electricity usage, and capital expenditure per ton of product. Their findings showed that a one-stage production method reduced energy usage by 4.92 GJ/t, electricity by 72.5 kWh/t, and investment costs by 50%, highlighting its potential to improve both circularity and competitiveness. Serrano-

Arévalo et al. [27] introduced indicators such as demand for non-renewable material, Abiotic Depletion Potential (ADP), energy self-sufficiency, and integrated measurement of costs, emissions (CO_2eq), and circularity, achieving a notable 76% reduction in total costs and 49% in emissions. Matos et al. [28] proposed a series of micro-circularity indicators capable of evaluating, at the level of the product life cycle, the proportion of recycled material, usage efficiency, and the minimization of waste generated. These applications demonstrate the value of diverse circularity metrics in the advancement towards more holistic and sustainable industrial systems.

This work proposes the incorporation of circular economy indicators to quantify the material requirements associated with the infrastructure used in various configurations for LA purification. The selected indicators emphasize the use of only strictly necessary infrastructure and materials, thereby minimizing the depletion of non-renewable resources. By incorporating these indicators, this work provides a more comprehensive and multi-dimensional evaluation of the proposed processes for LA purification, allowing for the identification of alternatives that are not only technically and economically viable, but also aligned with the principles of the circular economy. Moreover, a comparative analysis between purification designs with different degrees of process intensification is conducted to assess their impact on circular economy performance. The novelty of the work lies in the application of circularity-based sustainability metrics applied to purify LA, providing a replicable framework to evaluate bioproduct processes and to contribute to the broader goal of sustainable chemical production.

2. Problem Statement

Although LA is recognized as a highly versatile bio-based platform chemical with applications in fuels, polymers, solvents, and pharmaceuticals, its industrial implementation remains limited by the complexity and inefficiency of current purification processes. Emerging alternatives, including reactive extraction, deep eutectic solvents, electrodialysis, and intensified hybrid schemes, have shown technological potential to reduce energy consumption and improve recovery. However, a critical gap remains in the systematic evaluation of these technologies, not only in terms of technical and economic feasibility, but also under the lens of sustainability and circular economy principles. Current industrial practice seldom incorporates circularity indicators, leading to an underestimation of material depletion, energy inefficiency, and waste generation in purification schemes. Moreover, it is necessary to understand the impact of process intensification on these indicators, since although PI can yield significant energy, economic, and environmental savings, it does not inherently ensure better circular economy performance. Consequently, the lack of holistic frameworks that incorporate process intensification and circular economy metrics limits the ability to design purification routes that are simultaneously cost-effective, scalable, and environmentally sustainable.

3. Methodology

In the present study, the configurations proposed in previous research were used as references [20,22]. In those works, the objective functions that were considered were the total annual cost (TAC) and the eco-indicator 99 (EI99), which represent the economic and environmental indicators, respectively. It is important to note that the simulation of these configurations focused exclusively on these criteria. To broaden the scope of the evaluation, circular economy metrics were incorporated, thus integrating economic, environmental, and circularity criteria.

The proposed mathematical model consists of a set of relationships describing the integration of circular economy principles into different configurations to purify LA. The

main purpose of this integration is to include circularity indicators in process intensification, allowing the performance of each configuration to be evaluated from a sustainability perspective. It is worth noting that this model was developed based on the one proposed by Serrano-Arévalo et al. [27], whose main contribution was the definition of new circularity indicators focused on material usage. In this study, the Relative Material Impact Indicator (DMR) was employed to assess the material resources used during the system's construction (design) phase. This indicator quantifies the relationship between the amount of material resources consumed and the product obtained, providing a measure of the relative intensity of material use. This approach enables the evaluation of how efficiently the material inputs required for the infrastructure are converted into useful output, thereby offering valuable insights into the material sustainability of the process.

$$\boldsymbol{DMR} = \frac{\boldsymbol{MR_{tot}^{Norm}}}{\boldsymbol{Q_{LA}}} \tag{1}$$

where $\boldsymbol{MRtot}$ represents the impact associated with the consumption of non-renewable material resources required for the entire system infrastructure, reflecting the degree of resource depletion resulting from their use. The normalization superscript (*Norm*) allows for the adjustment of the masses of different materials, facilitating comparisons among them and providing a common basis for evaluation. Meanwhile, the variable $\boldsymbol{Q_{LA}}$ corresponds to the annual production of LA, which is used as a reference for estimating the process performance indicators.

A distinctive feature of this circular economy-based methodology is that it does not limit its scope to the purification process itself, but explicitly incorporates the upstream infrastructure required to satisfy the energy demand of the system. This includes the facilities and equipment necessary for fuel extraction and steam generation, two stages that are often overlooked in conventional sustainability assessments despite their significant contribution to material depletion.

Accordingly, the material requirements were divided into three stages:

(i) Infrastructure for fuel extraction ($MR_{fuel\ extraction}^{Norm}$): includes the facilities and equipment necessary to extract the fuel used in the boiler to satisfy the energy requirements of each process.

(ii) Infrastructure for the boiler (MR_{boiler}^{Norm}): considers the installation required to generate steam through fuel combustion. This steam is directed to the reboiler of the distillation column, where it transfers heat to the bottom liquid to achieve the partial boiling required for component separation.

(iii) Infrastructure for the LA purification process ($MR_{purification\ LA}^{Norm}$): encompasses the equipment and process units required to operate the purification stage.

$$MR_{fuel\ extraction}^{Norm} = mass_{fuel} REQ_{fuel} \tag{2}$$

$$MR_{boiler}^{Norm} = cap_{boiler} REQ_{boiler} \tag{3}$$

$$MR_{purification\ LA}^{Norm} = mass_{equipmentLA} REQ_{equipmentLA} \tag{4}$$

REQ is a parameter that defines the total amount of material required for the system infrastructure across its different stages, reflecting both the capacity and the mass needed in each of them. This parameter is multiplied by its respective capacity (*cap*) or mass (*mass*), depending on the process considered. For instance, Equation (2) accounts for the mass of the extracted fuel required by the system ($\boldsymbol{mass_{fuel}}$); Equation (3) considers the

boiler capacity (cap_{boiler}); and Equation (4) represents the mass of material required for the equipment involved in the LA purification stage ($mass_{equipmentLA}$).

The sum of all these material requirements represents the total impact associated with the entire process, encompassing all stages from fuel extraction to LA purification, and is expressed as follows:

$$MR_{tot}^{Norm} = MR_{fuel\ extraction}^{Norm} + MR_{boiler}^{Norm} + MR_{purification\ LA}^{Norm} \quad (5)$$

The methodology developed in this study focuses on the evaluation of different LA purification configurations reported in the literature [20,22], including both conventional and intensified processes. To establish a comparative basis, configurations with available economic and environmental performance data were selected. The economic analysis was conducted using the TAC, integrating operational costs, while the environmental analysis was carried out through EI99, which quantifies impacts on human health, ecosystem quality, and resource depletion throughout the process life cycle.

Based on this framework, circular economy metrics were incorporated to assess material usage in the infrastructure required for the construction of each configuration. In particular, the DMR indicator [27] was employed, which quantifies material consumption in three main stages of the process: fuel extraction, steam generation in the boiler, and the equipment comprising the LA purification configurations. This approach ensures that not only the direct process impacts are considered but also the indirect material burdens associated with supporting infrastructure and energy supply.

The expanded methodological scope allows for the systematic integration of economic, environmental, and circularity dimensions, considering both technical and operational feasibility criteria. The procedure, summarized in Figure 1, was consistently applied to all configurations following a standardized sequence: (1) collection of operational, economic, and environmental data reported in the literature; (2) calculation of circularity through the DMR; and (3) consolidation of the information for each configuration. This ensures a coherent reflection of the impacts associated with both the purification process and the supporting infrastructure.

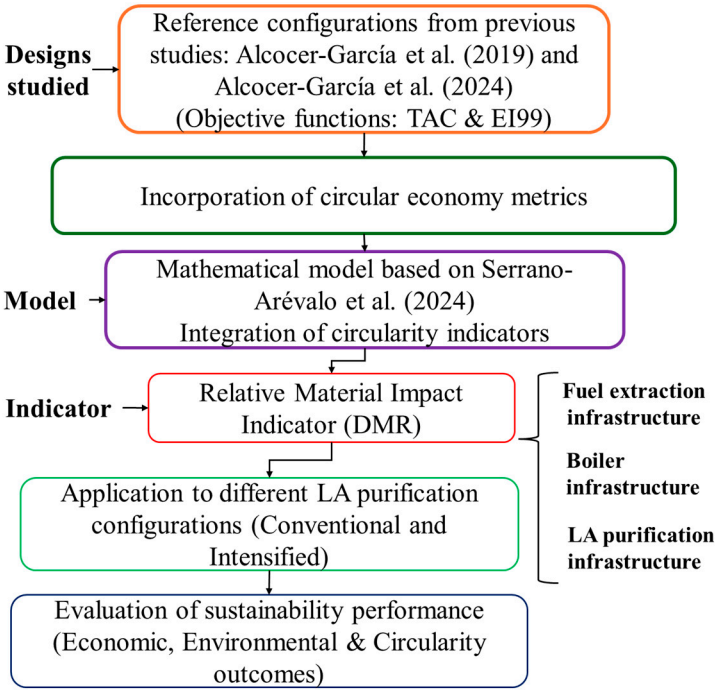

Figure 1. Overview of the proposed circular economy-based methodology [20,22,27].

4. Case Study

This work builds upon the hybrid schemes to purify LA reported by Alcocer-García et al. [20] and Alcocer-García et al. [22]. These schemes were selected because they represent alternative configurations for LA purification designed under the same production capacity and evaluated using comparable optimization criteria. They also reflect different degrees of process intensification by providing a suitable basis for a systematic comparison aimed at assessing how intensification influences circular economy performance. It is complex to identify the degrees of intensification in distillation sequences, since there is no clear classification in this regard. In this work, these sequences are categorized as follows: without intensification (sequences with conventional separation columns), lower degree (sequences with thermal couplings), intermediate degree (sequences that integrate thermal couplings with section movement), and high degree (sequences with thermal couplings, section movements, and incorporation of another separation technique, in this case decantation).

The schemes were optimized using a hybrid stochastic algorithm, Differential Evolution with Tabu List, considering as objective functions the TAC and the EI99, representing economic and environmental indicators, respectively. In this study, the proposed circularity-based assessment is applied to the optimal designs of each configuration, enabling the identification of trade-offs between process intensification, sustainability, and circular economy outcomes. The annual production of LA is 5×10^7 kg/year for all proposed designs. The feed that was used for the mixture to be purified was 90,000 kg/h, with a mass composition of 86% water, 7% LA, 4% furfural, and 3% formic acid, operating at a temperature of 298.15 K and a pressure of 202.65 kPa. All proposed schemes were simulated using Aspen Plus V8.8, and physical and thermodynamic properties were calculated using the NRTL-HOC thermodynamic model [22]. The design parameters of the sequences studied, which include dimensions and energy consumption, were placed in the Supplementary Materials.

4.1. Designs Obtained Through Systematic Synthesis

The schemes were obtained through a systematic synthesis of intensified alternatives to LA purification in the work of Alcocer-García et al. [22]. The designs consist of a liquid–liquid extraction column followed by distillation columns. They are divided into three categories: conventional, thermally coupled, and intensified.

4.1.1. Conventional Designs

The mixture to be separated is quaternary, so it is possible to obtain five conventional separation configurations by distillation. However, Alcocer-García et al. [22], through a thermodynamic feasibility study, determined that two of these designs do not reach the desired purities due to the presence of azeotropes. Obtaining three feasible conventional designs (CS1, CS2, and CS3) shown in Figure 2. These designs differ in the order of separation, which directly influences their energy consumption.

4.1.2. Thermally Coupled Schematics

Once the conventional schemes were generated, the design with the best economic and environmental characteristics was selected, being the CS3 design. Based on this design, the thermally coupled schemes (TC1, TC2, and TC3) were proposed, which are shown in Figure 3. These designs differ in the number of thermal couplings.

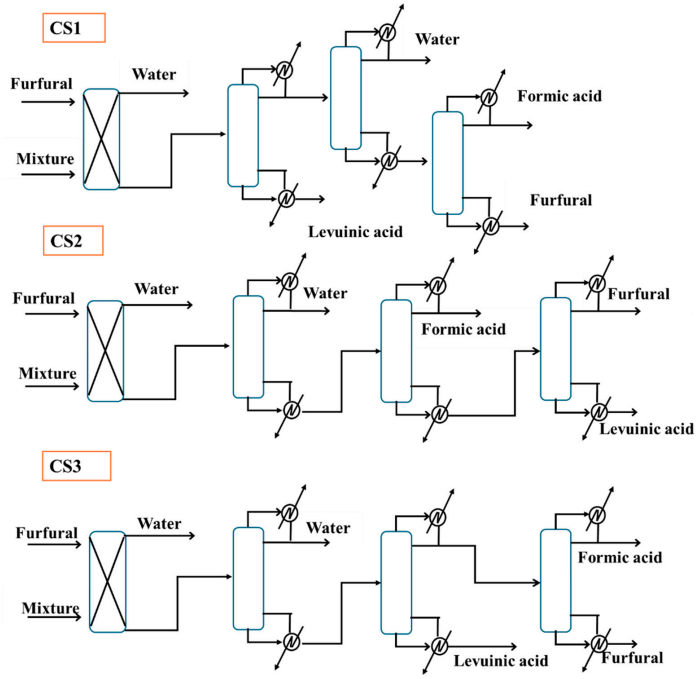

Figure 2. Conventional schemes studied.

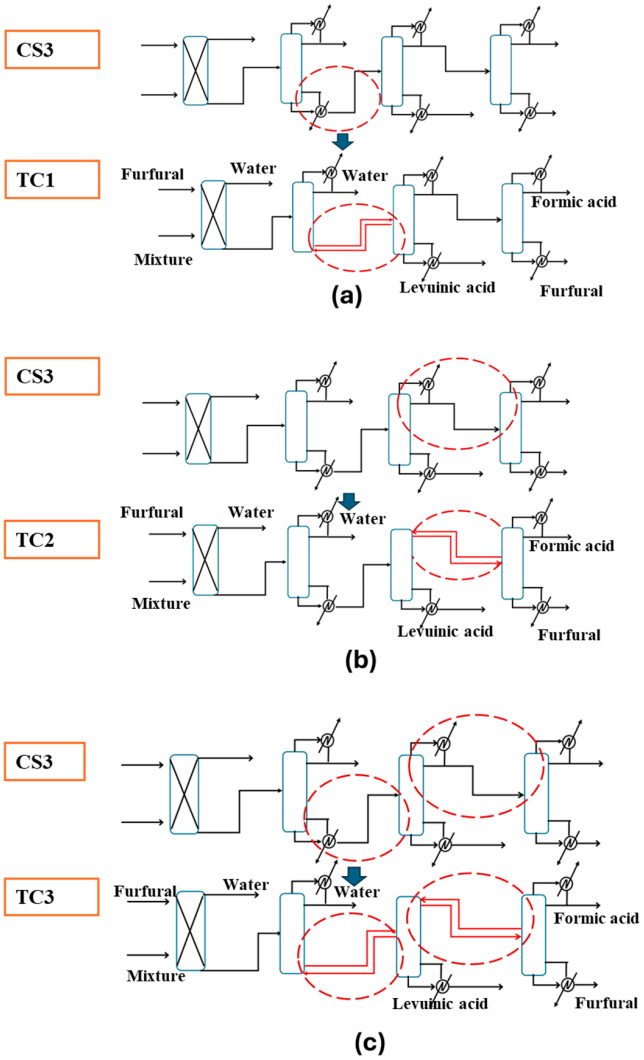

Figure 3. Thermally coupled schemes studied: (**a**) TC1, (**b**) TC2, and (**c**) TC3.

4.1.3. Intensified Designs

The TC2 design is the design of thermally coupled with the best environmental and economic indicators. Therefore, from this design, the intensified schemes are obtained by moving and eliminating sections: thermally equivalent system (TES1), sequence with dividing wall column (DWCS1), and N-1 column sequence (SI1), shown in the following Figure 4.

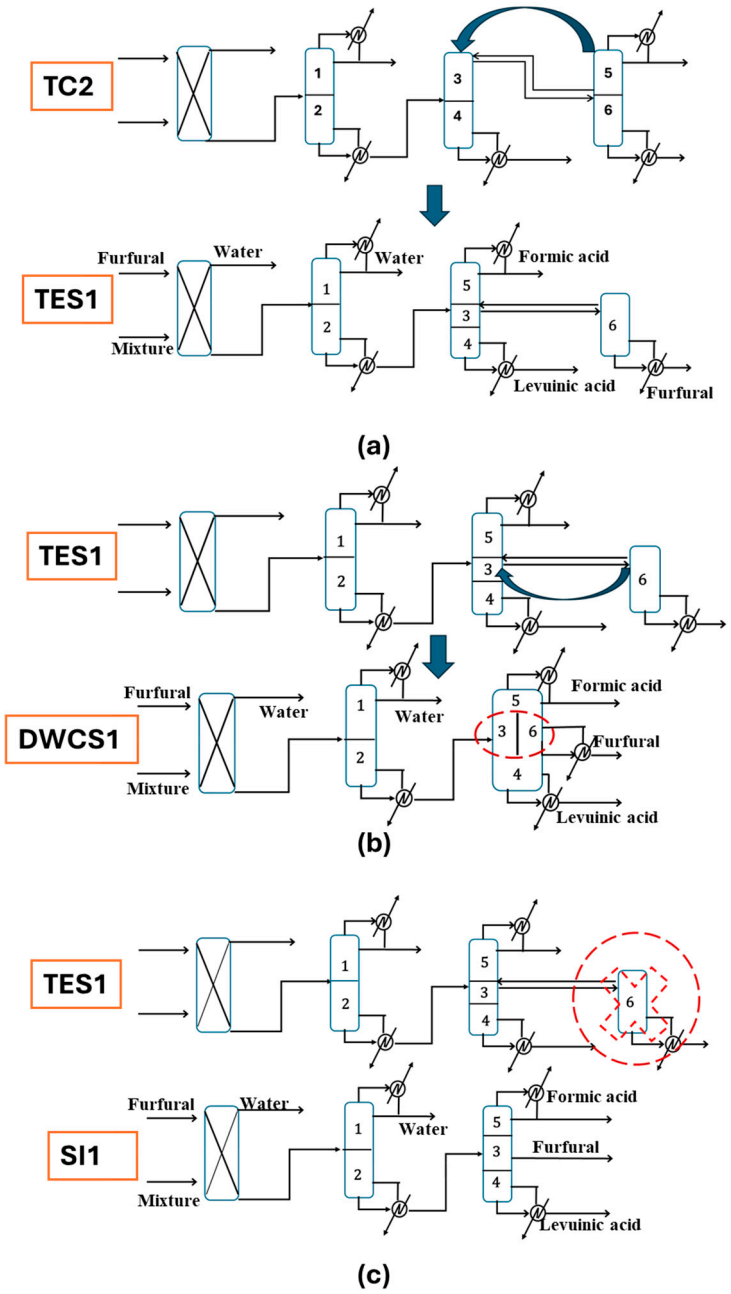

Figure 4. Intensified schemes studied: (**a**) TES1, (**b**) DWCS1, and (**c**) SI1.

4.2. Hybrid DWC–Decanter Intensification

Alcocer-García et al. [20] proposed hybrid schemes combining process intensification using dividing walls and the integration of a decanter to facilitate the removal of the aqueous phase. The sequence with the dividing wall column and decanter (DWCS-D) separates the LA first and implements the DWCS-D secondly. The Dividing Wall, the Decanter and the Thermal Coupling (DWCS-DA) sequences have a different separation

than that of the DWCS-D as the lightweight components are first separated. The schematics are shown in Figure 5.

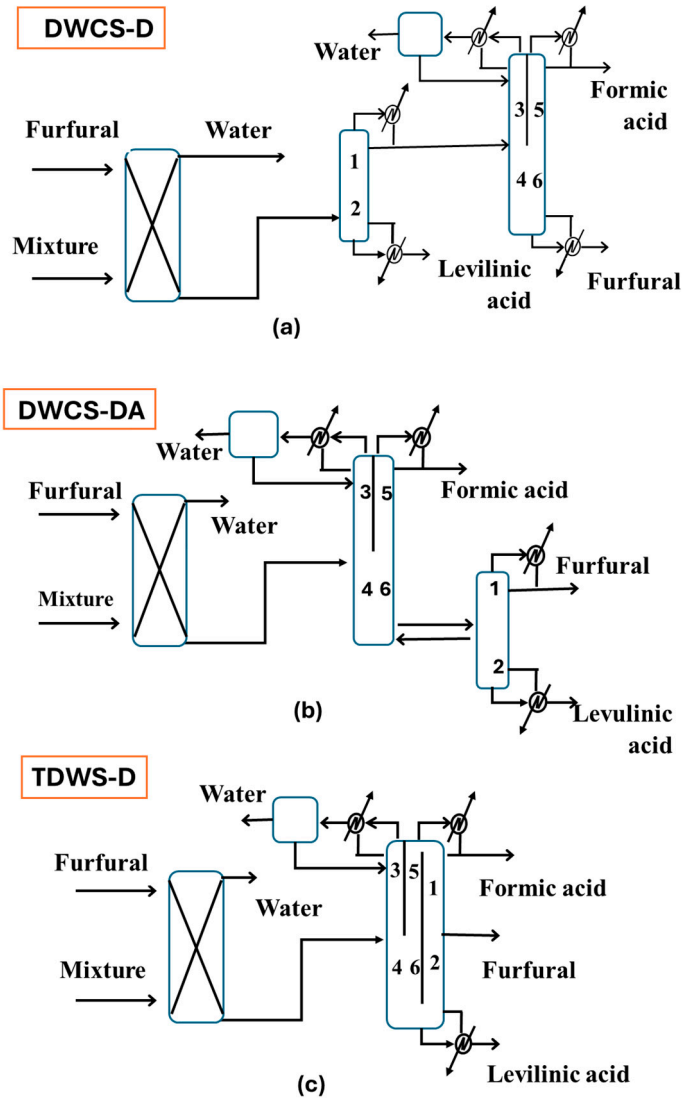

Figure 5. Intensified schemes studied: (**a**) DWCS-D, (**b**) DWCS-DA, and (**c**) TDWS-D.

4.3. Evaluation of Circular Economy Indicators

The application of the DMR indicator requires the quantification of the *REQ* parameter, which involves determining the mass of the materials that constitute the infrastructure associated with each of the three stages of the LA purification process: (i) fuel extraction, (ii) steam generation in the boiler, and (iii) the set of equipment comprising the LA purification configurations. Thus, the first two stages represent the energy supply required for the process, while the third stage corresponds to purification itself. The total mass of materials considered for each stage depends on the type of material used in its infrastructure, allowing for a comparative evaluation of the relative impact of each stage on resource use. For the quantification of material usage: data reported by Clark et al. [29] for conventional natural gas were used for fuel extraction; manufacturer data [30] were employed for steam boiler construction, and for purification configurations, steel was assumed as the main material, based on the simulations reported by Alcocer-García et al. [20,22], which describe the equipment specifications for each configuration. These three stages were selected explicitly because they represent the most critical and consistent parts of the process in terms of material requirements. Other stages, such as fuel transport or storage,

are not included in the analysis due to their high variability and dependence on site-specific conditions. It is assumed that the extracted material is directly sent to the steam boiler, omitting intermediate processes to avoid significant variations in the quantification of material requirements. This procedure ensures consistency in material quantification across stages and configurations, allowing the integration of multiple data sources into a unified evaluation of infrastructure-related resource use.

The normalization factor used is the abiotic depletion potential, an indicator that evaluates resource depletion within the impact category. This indicator focuses on how the extraction of mineral resources and fossil fuels affects the ecosystem. Its reference unit is the mass equivalent of antimony (Sbeq). Table 1 presents the normalized material requirement values (*REQ*) corresponding to each stage of the process.

Table 1. Material requirements in the stages of the LA purification process.

Stage Infrastructure	Material Requirements	Unit
Fuel extraction	2.459×10^{-5}	kg Sbeq/kg of natural gas extracted
Steam boiler	2.790×10^{1}	kg Sbeq/MW
Purification process	1.040×10^{-2}	kg Sbeq/kg of steel

5. Results and Discussion

5.1. Evaluation Metrics for the Analyzed Configurations

For the characterization of the case study, the assessment metrics compiled in Table 2 were established, including energy consumption, environmental impact, material requirements, fuel demand, and CO_2 emissions. The amount of steel was calculated from the schemes reported by Alcocer-García et al. [20,22]. The required fuel quantity was calculated from the reboiler heat duty, considering the fuel's calorific value and the boiler efficiency, so that the resulting value represents the fuel needed to generate the steam required in the process. A boiler efficiency of 85% was adopted, within the typical range of 75–90% reported in the literature [31], and a Higher Heating Value (HHV) of 55.5 MJ/kg corresponding to pure methane [32]. From this fuel quantity, CO_2 emissions were estimated using a factor of 2.75 kg CO_2/kg of methane [33], considering that the fuel is burned in the boiler. Furthermore, the annual operating time of 8500 h was considered, ensuring consistency with the projected operational conditions.

Table 2. Operating parameters for the configurations analyzed.

Configuration	Reboiler Heat Duty (MW)	Steel Required in the Purification Process (kg)	TAC ($/Year)	EI99 (Points/Year)	Methane Required (kg)	CO_2 Emissions (kg)
CS1	3.098×10^{1}	1.629×10^{4}	1.854×10^{7}	5.359×10^{9}	2.009×10^{7}	5.526×10^{7}
CS2	2.716×10^{1}	7.974×10^{3}	1.562×10^{7}	4.699×10^{9}	1.762×10^{7}	4.845×10^{7}
CS4	2.658×10^{1}	2.623×10^{4}	1.494×10^{7}	4.597×10^{9}	1.724×10^{7}	4.740×10^{7}
TCS1	2.637×10^{1}	2.176×10^{4}	1.638×10^{7}	4.562×10^{9}	1.710×10^{7}	4.704×10^{7}
TCS2	2.435×10^{1}	1.848×10^{4}	1.393×10^{7}	4.213×10^{9}	1.580×10^{7}	4.344×10^{7}
TCS3	2.985×10^{1}	1.614×10^{4}	1.890×10^{7}	5.140×10^{9}	1.936×10^{7}	5.325×10^{7}
TES1	2.499×10^{1}	1.852×10^{4}	1.432×10^{7}	4.350×10^{9}	1.621×10^{7}	4.457×10^{7}
DWCS1	2.508×10^{1}	1.688×10^{4}	1.426×10^{7}	4.337×10^{9}	1.627×10^{7}	4.473×10^{7}
SI1	3.016×10^{1}	1.528×10^{4}	1.770×10^{7}	5.218×10^{9}	1.957×10^{7}	5.381×10^{7}
DWCS-D	2.793×10^{1}	1.733×10^{4}	1.710×10^{7}	4.832×10^{9}	1.812×10^{7}	4.982×10^{7}
TDWS-D	3.225×10^{1}	1.276×10^{4}	2.057×10^{7}	5.580×10^{9}	2.092×10^{7}	5.753×10^{7}
DWCS-DA	2.648×10^{1}	2.387×10^{4}	1.694×10^{7}	5.581×10^{9}	1.717×10^{7}	4.723×10^{7}

Although natural gas is considered the fuel in the fuel extraction stage of the circular economy analysis, pure methane is adopted to estimate fuel consumption in the boiler and CO_2 emissions. This choice is because methane is the main energetic component of natural gas, allowing for a consistent calculation of the energy supplied to the reboiler. Furthermore, this approach is widely used in life cycle assessment and energy balance studies [34], helping to reduce uncertainty associated with the variability in natural gas composition.

From the perspective of energy consumption, measured as the thermal load of the reboiler, most configurations are between 24 and 32 MW. The TDWS-D configuration has the highest energy demand (32.25 MW), while TCS2 stands out as the most efficient (24.35 MW). This difference is directly reflected in methane consumption and CO_2 emissions, where TDWS-D generates 5.753×10^7 kg of CO_2, compared to 4.344×10^7 kg of TCS2.

Regarding the steel requirement, configurations vary considerably, with values ranging from 12,760 kg for TDWS-D to 26,230 kg for CS4. The significantly lower steel requirement in TDWS-D is primarily attributed to its innovative topological design, which integrates three conventional distillation columns into a single unit through the implementation of dividing wall columns. This structural consolidation significantly reduces the amount of external shell and supporting material, thereby decreasing the overall steel mass needed for fabrication. However, this compact and integrated configuration leads to increased internal vapor and liquid traffic within the column, elevating internal recirculation and remixing phenomena. Therefore, the thermodynamic complexity rises, which translates into higher reboiler duties to maintain the required separation efficiency. This elevated energy demand contributes to a higher environmental footprint, as reflected by TDWS-D's elevated EI99 score, positioning it as a less sustainable option despite its material savings. In contrast, configurations such as CS2 and TCS2 achieve a more balanced performance by combining moderate steel requirements with efficient energy consumption and environmental impact profiles. Specifically, TCS2, which employs targeted thermal coupling without the extensive integration seen in TDWS-D, demonstrates the lowest TAC, approximately $13.93 million annually. This cost advantage, coupled with its favorable environmental metrics, underscores TCS2's profile as the optimal configuration that effectively balances material usage, operational efficiency, and sustainability objectives.

The EI99 environmental impact index reveals significant differences between configurations. TDWS-D and DWCS-DA recorded the highest values (5.58×10^9 points/year), while TCS2 reached the lowest value (4.213×10^9 points/year). This disparity shows that advanced intensification does not automatically guarantee an improvement in sustainability.

Figure 6 presents three graphs comparing different LA purification configurations using six key indicators: reboiler energy consumption, required steel quantity, TAC, EI99, required methane, and CO_2 emissions. The values of TAC, EI99, and reboiler energy consumption were obtained from the reference configurations reported in previous studies [20,22]. In contrast, the required methane, required steel quantity, and CO_2 emissions were estimated in this work based on the reported energy consumption data and the topological characteristics of each process design, as shown in the Supplementary Materials. To ensure a fair and consistent comparison, the results summarized in Table 2 were normalized by dividing each indicator value by the highest value observed among all configurations. This normalization procedure converts all parameters into a dimensionless scale ranging from 0 to 1, eliminating the influence of differing magnitudes and measurement units. Such standardization is essential for multi-criteria evaluations, as it prevents indicators with larger numerical scales (e.g., energy or emissions) from dominating the assessment, thereby allowing the relative performance of each configuration to be objectively and transparently compared.

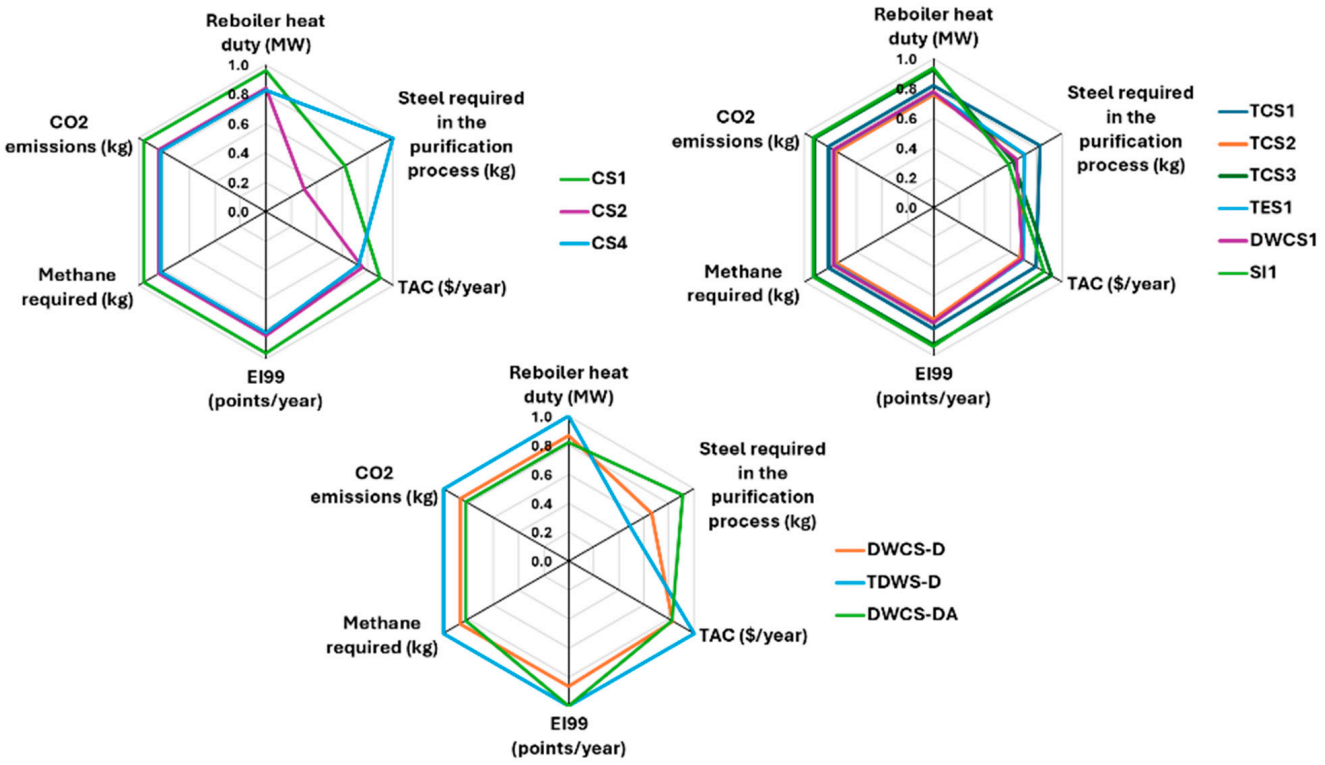

Figure 6. Multi-criteria comparison of LA purification designs.

Each graph evaluates specific groups of configurations: the first compares conventional schemes (CS1, CS2, CS3, and CS4), the second analyzes thermally coupled and intensified configurations (TCS1, TCS2, TCS3, TES1, DWCS1, SI1), and the third focuses on hybrid schemes with a decanter (TCS1, TDWS-D, DWCS-D, and DWCS-DA). This visualization allows multiple dimensions of technical, economic, and environmental performance to be evaluated simultaneously, facilitating the identification of more efficient and sustainable alternatives for the process.

In the individual graphs, the first shows that, within conventional configurations, CS2 is the most balanced option, with lower emissions and steel requirements. This favorable performance is largely due to its optimized separation order, which minimizes energy consumption and equipment size by efficiently managing vapor and liquid loads. Thus, the sequence of component removal significantly influences the environmental and material impact of each design.

The second graph identifies TCS2 as the most efficient and sustainable configuration among thermally coupled and intensified designs, while configurations such as SI1 and TCS3 exhibit notably higher energy consumption, CO_2 emissions, and associated operational costs. The reduced column count in SI1 adversely affects its thermodynamic performance by limiting separation flexibility, which increases the reboiler duty and, consequently, both fuel consumption and CO_2 emissions. This results in elevated costs in steam generation and service utilities, significantly impacting the TAC. In contrast, TCS3 employs two thermal couplings aimed at enhancing energy integration; however, the intensified internal vapor and liquid flows increase remixing and hydraulic complexity within the columns. This phenomenon elevates the reboiler heat duty and fuel demand, resulting in increased CO_2 emissions and steam generation costs. The amplified service expenses reflect directly on TAC, offsetting potential gains from thermal coupling. Thus, while thermal couplings can reduce external energy inputs, excessive or suboptimal coupling may inad-

vertently increase energy consumption and emissions due to intensified internal process dynamics, ultimately raising operational costs and undermining overall sustainability.

The third graph points out that hybrid configurations with decanters, such as TDWS-D and DWCS-DA, exhibit the greatest environmental and material impacts. This outcome is influenced by several factors, including the specific order of separation and the inherently high energy consumption of these intensified schemes. The integration of dividing wall columns modifies the process topology, often increasing internal vapor and liquid traffic, which elevates reboiler duties. Consequently, these topological features, while aiming to improve separation efficiency and reduce equipment count, can lead to increased energy demand that dominates the overall sustainability profile. Thus, despite potential material savings from compact designs, the high thermal energy requirements significantly impact CO_2 emissions, fuel consumption, and ultimately, the circular economy indicators. The TCS1 design maintains a more balanced profile, suggesting that advanced intensification does not always translate into overall improvements. The graphs confirm that TCS2 consistently maintains the lowest values across all energy and environmental indicators. In fact, the graphs show that hybrid configurations such as TDWS-D, despite their lower use of steel, concentrate the greatest environmental and economic impacts.

These results confirm that the relationship between intensification and sustainability is not linear or direct. It is essential to apply a multi-criteria assessment that incorporates technical, economic, and environmental aspects to select the most appropriate configuration. The TCS2 configuration stands out as the most robust and sustainable option, evidencing lower energy, material, and emissions consumption, along with the most favorable operating cost. Conversely, highly intensified designs such as TDWS-D can significantly increase the environmental and economic impact, despite their material advantages.

5.2. Circular Economy Assessment Results

The mathematical model was implemented directly through the iterative resolution of the established relationships, which allow for the performance variables of each configuration to be calculated. This study incorporates the circular economy concept by considering the infrastructure employed in the LA purification process. This process has been classified into three main stages: (i) fuel extraction, (ii) steam generation in the boiler, and (iii) the set of equipment comprising the LA purification configurations. The quantification of material requirements enables the identification of the impact associated with resource extraction, using the circular economy indicator DMR developed by Serrano-Arévalo et al. [27]. This indicator quantifies the impact of material resources used in each stage of the process. Such an approach allows for the comparative identification of the stage with the highest contribution to environmental impact, providing key information for decision-making aimed at process intensification and sustainability.

In this context, Table 3 presents the impact of each configuration across the different stages of the process, expressed in terms of mass of Sbeq. In the fuel extraction stage, the TDWS-D configuration shows the highest impact, with 5.144×10^2 kg Sbeq, due to the high amount of fuel required for this sequence (2.092×10^7 kg of methane). In contrast, the TCS2 configuration records the lowest impact at this stage, with 3.884×10^2 kg Sbeq, requiring 1.580×10^7 kg of methane (see Table 2). It is noteworthy that both configurations involve thermal coupling. The results indicate that, in the fuel extraction stage, the impact is directly proportional to the amount of fuel required. Furthermore, it is observed that the conventional CS1 configuration (without intensification) presents a higher impact in this stage compared to CS2 and CS4, and even surpasses several intensified configurations with thermal coupling, such as TCS1, TCS2, TCS3, TES1, DWCS1, SI1, DWCS-D, and DWCS-DA.

Table 3. Material requirements for LA purification stages.

Configuration	Fuel Extraction (kg Sbeq)	Steam Boiler (kg Sbeq)	Purification (kg Sbeq)	Total (kg Sbeq)
CS1	4.941×10^2	8.644×10^2	1.694×10^2	1.528×10^3
CS2	4.332×10^2	7.579×10^2	8.293×10^1	1.274×10^3
CS4	4.239×10^2	7.416×10^2	2.727×10^2	1.438×10^3
TCS1	4.206×10^2	7.358×10^2	2.263×10^2	1.383×10^3
TCS2	3.884×10^2	6.795×10^2	1.922×10^2	1.260×10^3
TCS3	4.761×10^2	8.329×10^2	1.678×10^2	1.477×10^3
TES1	3.985×10^2	6.972×10^2	1.926×10^2	1.288×10^3
DWCS1	4.000×10^2	6.998×10^2	1.756×10^2	1.275×10^3
SI1	4.811×10^2	8.417×10^2	1.589×10^2	1.482×10^3
DWCS-D	4.455×10^2	7.793×10^2	1.802×10^2	1.405×10^3
TDWS-D	5.144×10^2	9.000×10^2	1.327×10^2	1.547×10^3
DWCS-DA	4.223×10^2	7.388×10^2	2.483×10^2	1.409×10^3

In the boiler steam generation stage, the TDWS-D configuration exhibits the highest impact, with 9.000×10^2 kg Sbeq, whereas the TCS2 configuration shows the lowest, with 6.795×10^2 kg Sbeq. This difference is closely related to the reboiler duty, as TDWS-D requires 3.225×10^1 MW, while TCS2 has an energy demand of 2.435×10^1 MW. It is important to note that the conventional configurations (CS1, CS2, and CS4) do not necessarily require the lowest duty, as they show intermediate values, ranging from 2.658×10^1 MW to 3.098×10^1 MW (see Table 2). This highlights that process intensification does not always imply lower energy consumption; depending on the adopted configuration, it can lead to either reductions or increases in steam requirements, and consequently, in the material requirement impacts associated with this stage. Moreover, the consistently higher values observed in the boiler stage compared to fuel extraction are attributed to the nature of the infrastructure involved. While fuel extraction relies on distributed systems with relatively low material intensity, steam generation requires centralized, high-capacity equipment such as industrial boilers constructed from steel and other resource-intensive materials [35]. This structural difference explains why the boiler stage systematically contributes more to the overall material impact.

In the LA purification stage, the most significant material requirements are observed in the CS4 configuration, with an impact of 2.727×10^2 kg Sbeq, whereas CS2 presents the lowest impact, with 8.293×10^1 kg Sbeq. This difference is directly related to the amount of steel needed for the construction of the purification equipment, which amounts to 2.623×10^4 kg of steel for CS4 and 7.974×10^3 kg for CS2 (see Table 2). This result highlights that, even among conventional configurations, significant contrasts in material impacts may occur while one configuration reaches the highest value, another shows the lowest. This demonstrates that the absence of process intensification does not necessarily guarantee a lower impact in terms of material requirements.

The DMR indicator was calculated to evaluate material consumption and the resources associated with the system infrastructure in relation to the amount of final product, as shown in Figure 7. Its estimation accounted for the impact of material resources used throughout the entire LA purification process, which includes the three main stages of the system. The resulting material impacts are summarized in Table 1 and were estimated based on the parameters reported in Table 2. Specifically, for the natural gas extraction stage, the values indicated in Table 2 were applied according to the required fuel amount. Likewise, for the boiler, the corresponding reboiler heat duty values were consid-

ered. Finally, for the LA purification stage, the reported steel requirements from Table 2 were incorporated.

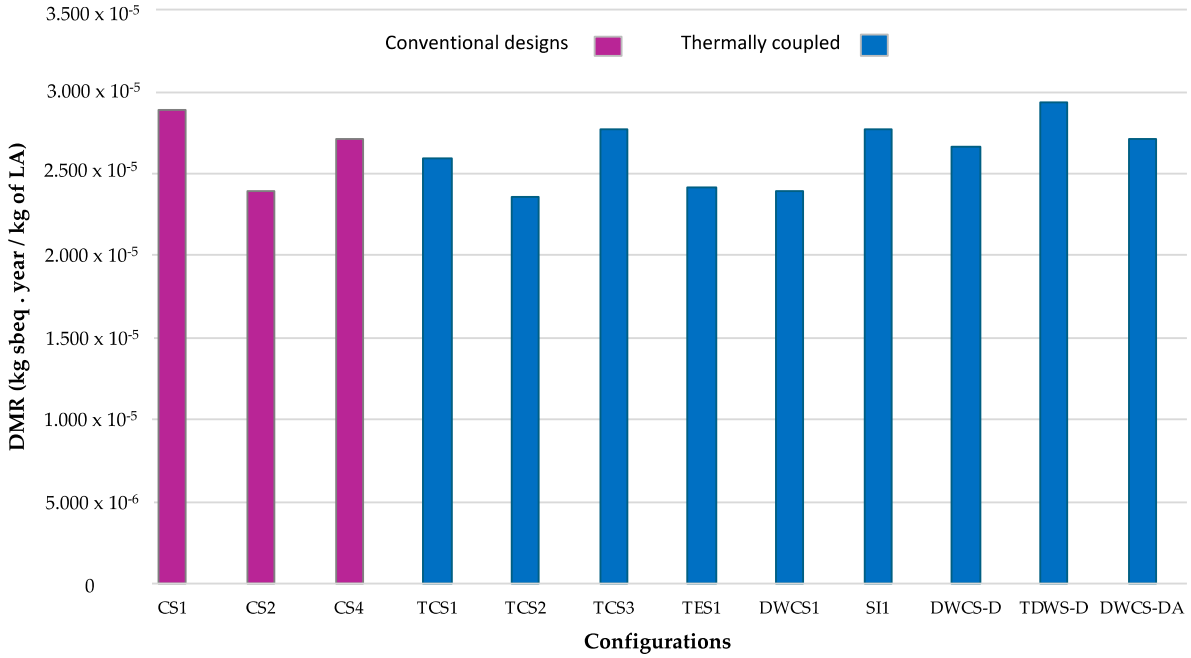

Figure 7. DMR indicator for the analyzed configurations in the LA purification process.

In terms of overall impact (entire process), the configuration with the highest value is TDWS-D, with 1.547 $\times$ 10^3 kg Sbeq, while the configuration with the lowest impact is TCS2, with 1.260 $\times$ 10^3 kg Sbeq. Furthermore, the DMR was calculated for all configurations, assuming an annual production of 5 $\times$ 10^7 kg/year. Under this approach, the configuration with the highest circular economy impact is also TDWS-D, with 2.941 $\times$ 10^{-5} kg Sbeq·year/kg of LA, and the lowest is TCS2, with 2.362 $\times$ 10^{-5} kg Sbeq·year/kg of LA, representing a relative difference of 24.51 steam generation between them.

Overall, the DMR values of the remaining configurations (conventional and intensified) (CS1, CS2, CS4, TCS1, TCS3, TES1, DWCS1, SI1, DWCS-D, and DWCS-DA) fall within a range of 2.390 $\times$ 10^{-5} to 2.893 $\times$ 10^{-5} kg Sbeq·year/kg of LA. A relevant aspect is that, when comparing the maximum DMR value recorded for the conventional configuration CS1 (2.893 $\times$ 10^{-5} kg Sbeq·year/kg of LA) with that of the intensified TDWS-D (2.941 $\times$ 10^{-5} kg Sbeq·year/kg of LA), the difference is only 1.66%, suggesting that process intensification does not necessarily imply a significant reduction in terms of material resource consumption. In fact, some conventional configurations exhibit DMR values higher than those of certain intensified configurations, indicating that the type of technology (conventional or intensified) alone is not a reliable predictor of the associated environmental impact. These variations are related to the specific requirements of each stage, determined by the energy supply and the material use associated with the size of the purification equipment.

5.3. Analysis of Economic and Environmental Impacts

Another relevant aspect of this analysis is the economic and environmental assessment, particularly regarding operating costs, emissions resulting from fuel combustion, and performance measured through EI99. According to the results presented in Table 2, the configuration with the highest annual cost is TDWS-D, with a value of 2.057 $\times$ 10^7 \$/year, while the lowest-cost configuration is TCS2, at 1.393 $\times$ 10^7 \$/year, representing a difference

of approximately 6.637 × 10^6 $/year between the two configurations. Regarding environmental impact, the amount of CO_2 emissions generated from fuel combustion in each configuration was estimated, using an emission factor of 2.75 kg CO_2/kg of methane [33]. The results show that TDWS-D has the highest impact, with 5.753 × 10^7 kg of CO_2, while TCS2 has the lowest, with 4.344 × 10^7 kg of CO_2, as shown in Figure 8. The values presented in Figure 8 were obtained from the data reported by Alcocer-García et al. [20,22], corresponding to the different configurations of the evaluated system. These data include estimates of costs and emissions and were used to enable a consistent and specific evaluation, tailored to the scope of the present study, providing relevant information to support decision-making regarding the alternatives considered.

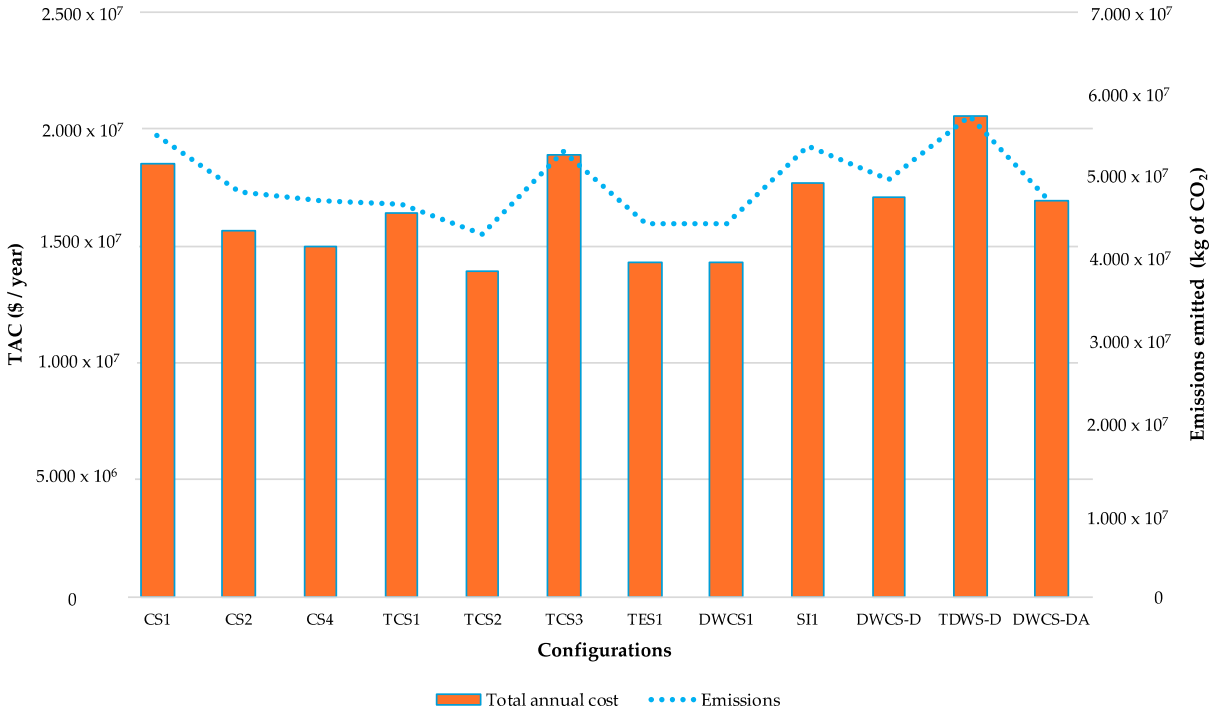

Figure 8. Economic and environmental indicators for the analyzed configurations in the LA purification process.

It is important to highlight that these results are directly related to the system's energy consumption: the higher the energy demand, the greater the amount of fuel required, which simultaneously increases both operating costs and CO_2 emissions. Thus, the analysis confirms that the economic and environmental performance of the process is closely coupled, emphasizing the need to integrate energy efficiency and sustainability criteria in the selection of technological configurations.

Regarding the EI99, the results show that the DWCS-DA configuration exhibits the highest impact, with a value of 5.581 × 10^9 points/year, although this result is only 0.02% higher than that of the TDWS-D configuration (5.580 × 10^9 points/year). On the other hand, the configuration with the lowest impact is TCS2, with 4.213 × 10^9 points/year (see Table 2).

Contrary to the results for costs and emissions, where TDWS-D consistently exhibited the highest impact, DWCS-DA presents a slightly higher value. This difference, although minimal, can be attributed to the fact that EI99 encompasses multiple categories of environmental impact beyond direct emissions, such as human health and other effects associated with the life cycle. Under this broader perspective, certain additional requirements of the DWCS-DA configuration (e.g., greater complexity in equipment or specific inputs)

may explain why its total score slightly exceeds that of TDWS-D. Thus, while the general trend that configurations with higher energy consumption tend to concentrate the highest impacts is maintained, the EI99 analysis reveals additional nuances not captured when considering only economic costs or CO_2 emissions. This highlights the usefulness of employing integrative indicators that are capable of detecting more subtle differences in the overall sustainability of the evaluated configurations.

5.4. Integrated Sustainability and Circularity Assessment

The integrated evaluation of the twelve purification configurations reveals complex interactions between process intensification, material resource consumption, economic performance, and environmental impact. By jointly analyzing the metrics DMR (kg Sbeq), TAC, EI99, reboiler duty, steel mass, methane demand, and CO_2 emissions, a more nuanced understanding of sustainability emerges.

Circular economy performance, quantified through the DMR indicator, shows that configurations with high energy demand tend to exhibit elevated material impacts, particularly in the steam generation stage. TDWS-D, the most intensified design, presents the highest DMR (2.941×10^{-5} kg Sbeq·year/kg LA), driven by its reboiler duty of 32.25 MW and corresponding infrastructure requirements. Despite its advanced design, this configuration also records the highest TAC and EI99 values, indicating that maximal intensification does not guarantee economic or environmental superiority.

In contrast, TCS2, a configuration with selective thermal coupling, achieves the lowest DMR (2.362×10^{-5} kg Sbeq·year/kg LA), the lowest TAC (1.393×10^{7} \$/year), and the lowest EI99 (4.213×10^{9} points/year). Its moderate energy demand (24.35 MW) and optimized purification equipment (18,480 kg of steel) contribute to reduced fuel consumption and CO_2 emissions. This suggests that targeted intensification, rather than aggressive structural redesign, can yield optimal trade-offs across all sustainability dimensions.

Steel requirements in the purification stage vary widely, from 7974 kg (CS2) to 26,230 kg (CS4), reflecting differences in equipment complexity and separation strategy. Interestingly, CS2 (despite being a conventional design) achieves the lowest purification impact and ranks favorably in DMR, TAC, and EI99. This challenges the assumption that intensified designs are inherently superior, and it highlights the role of equipment compactness and separation order in minimizing resource use.

Methane demand and CO_2 emissions closely follow the reboiler duty, reinforcing the link between energy consumption and environmental burden. TDWS-D requires 20.92×10^{6} kg of methane annually, emitting 57.53×10^{6} kg of CO_2, while TCS2 consumes only 15.80×10^{6} kg of methane, emitting 43.44×10^{6} kg of CO_2. These differences are critical when evaluating long-term sustainability and climate impact, especially in large-scale bioproduct systems.

When comparing conventional vs. intensified configurations, the results show that some conventional designs (e.g., CS2) outperform certain intensified alternatives (e.g., DWCS-DA) in circularity and environmental metrics. This underscores that intensification must be strategically aligned with energy and material efficiency, rather than applied indiscriminately.

Overall, the findings reveal that sustainability in LA purification is not determined by intensification alone, but by the synergistic balance between energy demand, equipment design, and material resource use. The DMR indicator proves effective in capturing these trade-offs, offering a robust framework to evaluate circular economy performance in complex chemical systems.

6. Conclusions

This study integrates a circular economy approach into LA purification processes with varying degrees of technological intensification, expanding the scope of traditional assessments that have historically focused on economic and environmental indicators such as TAC and EI99. To overcome these limitations, the DMR indicator was integrated, enabling the quantification of infrastructure-related material requirements across three critical stages: (i) fuel extraction, (ii) steam generation in the boiler, and (iii) operation of separation and purification equipment. The first two stages reflect the energy supply infrastructure, while the third captures the structural demands of the purification system.

The analysis of twelve configurations (CS1, CS2, CS4, TCS1, TCS2, TCS3, TES1, DWCS1, SI1, DWCS-D, TDWS-D, and DWCS-DA) revealed that material requirements reach values of 2.459×10^{-5} kg Sbeq/kg of gas extracted, 2.790×10^{1} kg Sbeq/MW, and 1.040×10^{-2} kg Sbeq/kg of steel for the fuel extraction, steam generation, and purification stages, respectively. These values confirm that the energy-related stages dominate the overall material impact, with the boiler infrastructure contributing the most due to its centralized, high-capacity nature and intensive use of steel. In contrast, the purification stage, though variable, contributes relatively less, depending on equipment design and compactness.

Among the configurations, TDWS-D exhibits the highest values in DMR, TAC, and CO_2 emissions, driven by its elevated energy demand and complex infrastructure. Conversely, TCS2 achieves the lowest impact across all metrics, demonstrating that selective and strategic intensification (rather than maximalist design) can yield superior sustainability outcomes.

A key finding is that some conventional configurations outperform certain intensified ones in circularity metrics, challenging the assumption that technological intensification inherently leads to lower impacts. Overall performance depends on the interaction between energy demand, the number and type of unit operations, and the sizing of purification equipment. This underscores the need for integrated design strategies that balance energy efficiency, equipment optimization, and reduced use of critical materials.

From a circular economy perspective, the results confirm a strong interdependence between economic and environmental performance, and higher energy consumption correlates with increased operational costs and CO_2 emissions. Therefore, integrating circularity metrics such as DMR with conventional indicators enables a more comprehensive and robust assessment of sustainability. This approach provides a valuable framework for selecting technological configurations that combine process efficiency, resource rationalization, and alignment with circular economy principles, contributing to the development of resilient and environmentally responsible purification systems for LA and other bio-based chemicals.

Supplementary Materials: The following supporting information can be downloaded at: https://www.mdpi.com/article/10.3390/pr13113496/s1, Table S1: Design parameters for conventional schemes; Table S2: Design parameters for thermally coupled schemes; Table S3: Design parameters for Intensified schemes studied: TES1, DWCS1, and SI1; Table S4: Design parameters for Intensified schemes studied: DWCS-D, DWCS-DA, and TDWS-D; Table S5: Energy requirements and the amount of LA produced.

Author Contributions: Conceptualization, T.I.S.-A., H.A.-G., C.R.-M. and J.M.P.-O.; methodology, T.I.S.-A., H.A.-G., C.R.-M. and J.M.P.-O.; software, T.I.S.-A., H.A.-G., C.R.-M. and J.M.P.-O.; validation, T.I.S.-A., H.A.-G., C.R.-M. and J.M.P.-O.; formal analysis, T.I.S.-A., H.A.-G., C.R.-M. and J.M.P.-O.; investigation, T.I.S.-A., H.A.-G., C.R.-M. and J.M.P.-O.; resources, J.M.P.-O.; data curation, T.I.S.-A., H.A.-G., C.R.-M. and J.M.P.-O.; writing—original draft preparation, T.I.S.-A., H.A.-G., C.R.-M.

and J.M.P.-O.; writing—review and editing, T.I.S.-A., H.A.-G., C.R.-M. and J.M.P.-O.; visualization, T.I.S.-A., H.A.-G., C.R.-M. and J.M.P.-O.; supervision, H.A.-G. and J.M.P.-O.; project administration, H.A.-G. and J.M.P.-O.; funding acquisition, J.M.P.-O. All authors have read and agreed to the published version of the manuscript.

Funding: The authors appreciate the financial support provided by the Secretaría de Ciencia, Humanidades, Tecnología e Innovación (SECIHTI), and Coordinación de la Investigación Científica de la Universidad Michoacana de San Nicolás de Hidalgo (CIC-UMSNH).

Data Availability Statement: The original contributions presented in this study are included in the article/Supplementary Materials. Further inquiries can be directed to the corresponding authors.

Conflicts of Interest: The authors declare no conflicts of interest.

Abbreviations

The following abbreviations are used in this manuscript:

CS	Conventional Scheme
DES	Deep Eutectic Solvents
DMR	Relative Material Impact
DWCS1	Dividing wall column sequence
ED	Electrodialysis
EI99	Eco-Indicator 99
HMF	5-Hydroxymethylfurfural
LA	Levulinic Acid
MIBK	Methyl Isobutyl Ketone
NRTL-HOC	Non-Random Two Liquid—Hayden–O'Connell model
SI1	N–1 column sequence
TAC	Total Annual Cost
TC	Thermally Coupled Scheme
TES1	Thermally equivalent system configuration
TOA	Trioctylamine
TOPO	Trioctylphosphine Oxide

References

1. Hayes, G.C.; Becer, C.R. Levulinic acid: A sustainable platform chemical for novel polymer architectures. *Polym. Chem.* **2020**, *11*, 4068–4077. [CrossRef]
2. Errico, M.; Stateva, R.P.; Leveneur, S. Novel intensified alternatives for purification of levulinic acid recovered from lignocellulosic biomass. *Processes* **2021**, *9*, 490. [CrossRef]
3. Solis-Sanchez, J.L.; Alcocer-Garcia, H.; Sanchez-Ramírez, E.; Segovia-Hernandez, J.G. Innovative reactive distillation process for levulinic acid production and purification. *Chem. Eng. Res. Des.* **2022**, *183*, 28–40. [CrossRef]
4. Meramo-Hurtado, S.I.; Ojeda, K.A.; Sanchez-Tuiran, E. Environmental and safety assessments of industrial production of levulinic acid via acid-catalyzed dehydration. *ACS Omega* **2019**, *4*, 22302–22312. [CrossRef] [PubMed]
5. Bozell, J.J.; Moens, L.; Elliott, D.C.; Wang, Y.; Neuenscwander, G.G.; Fitzpatrick, S.W.; Bilski, R.J.; Jarnefeld, J.L. Production of levulinic acid and use as a platform chemical for derived products. *Resour. Conserv. Recycl.* **2000**, *28*, 227–239. [CrossRef]
6. Perveen, F.; Farooq, M.; Ramli, A.; Naeem, A.; Khan, I.W.; Saeed, T.; Khan, J. Levulinic acid production from waste corncob biomass using an environmentally benign WO_3-grafted $ZnCo_2O_4$@CeO_2 bifunctional heterogeneous catalyst. *ACS Omega* **2023**, *8*, 333–345. [CrossRef]
7. Hurst, G.; Brangeli, I.; Peeters, M.; Tedesco, S. Solid residue and by-product yields from acid-catalysed conversion of poplar wood to levulinic acid. *Chem. Pap.* **2020**, *74*, 1647–1661. [CrossRef]
8. Sobuś, N.; Czekaj, I. Catalytic transformation of biomass-derived glucose by one-pot method into levulinic acid over Na-BEA zeolite. *Processes* **2022**, *10*, 223. [CrossRef]
9. Leal Silva, J.F.; Maciel Filho, R.; Wolf Maciel, M.R. Process design and technoeconomic assessment of the extraction of levulinic acid from biomass hydrolysate using n-butyl acetate, hexane, and 2-methyltetrahydrofuran. *Ind. Eng. Chem. Res.* **2020**, *59*, 11031–11041. [CrossRef]

10. Sajid, M.; Farooq, U.; Bary, G.; Azim, M.M.; Zhao, X. Sustainable production of levulinic acid and its derivatives for fuel additives and chemicals: Progress, challenges, and prospects. *Green Chem.* **2021**, *23*, 9198–9238. [CrossRef]
11. Chen, S.; Zheng, W.; Liu, W.; Liu, L.; Sun, W. Optimization and purification of levulinic acid extracted from bagasse. *Sugar Tech* **2020**, *22*, 830–841. [CrossRef]
12. Kumar, A.; Shende, D.Z.; Wasewar, K.L. Extractive separation of levulinic acid using natural and chemical solvents. *Chem. Data Collect.* **2020**, *28*, 100417. [CrossRef]
13. Brouwer, T.; Blahusiak, M.; Babic, K.; Schuur, B. Reactive extraction and recovery of levulinic acid, formic acid and furfural from aqueous solutions containing sulphuric acid. *Sep. Purif. Technol.* **2017**, *185*, 186–195. [CrossRef]
14. Riveiro, E.; González, B.; Domínguez, Á. Extraction of adipic, levulinic and succinic acids from water using TOPO-based deep eutectic solvents. *Sep. Purif. Technol.* **2020**, *241*, 116692. [CrossRef]
15. Habe, H.; Kondo, S.; Sato, Y.; Hori, T.; Kanno, M.; Kimura, N.; Koike, H.; Kirimura, K. Electrodialytic separation of levulinic acid catalytically synthesized from woody biomass for use in microbial conversion. *Biotechnol. Prog.* **2017**, *33*, 448–453. [CrossRef]
16. Bokhary, A.; Leitch, M.; Liao, B.Q. Liquid–liquid extraction technology for resource recovery: Applications, potential, and perspectives. *J. Water Process Eng.* **2021**, *40*, 101762. [CrossRef]
17. de Haan, A.B.; Eral, H.B.; Schuur, B. *Industrial Separation Processes: Fundamentals*; Walter de Gruyter GmbH & Co. KG: Berlin, Germany, 2020.
18. Ramírez-Márquez, C.; Al-Thubaiti, M.M.; Martín, M.; El-Halwagi, M.M.; Ponce-Ortega, J.M. Processes intensification for sustainability: Prospects and opportunities. *Ind. Eng. Chem. Res.* **2023**, *62*, 2428–2443. [CrossRef]
19. Segovia-Hernández, J.G.; Hernández, S.; Cossío-Vargas, E.; Sánchez-Ramírez, E. Challenges and opportunities in process intensification to achieve the UN's 2030 agenda: Goals 6, 7, 9, 12 and 13. *Chem. Eng. Process. Process Intensif.* **2023**, *192*, 109507. [CrossRef]
20. Alcocer-García, H.; Segovia-Hernández, J.G.; Prado-Rubio, O.A.; Sánchez-Ramírez, E.; Quiroz-Ramírez, J.J. Multi-objective optimization of intensified processes for the purification of levulinic acid involving economic and environmental objectives. *Chem. Eng. Process. Process Intensif.* **2019**, *136*, 123–137. [CrossRef]
21. Tronci, S.; Garau, D.; Stateva, R.P.; Cholakov, G.; Wakeham, W.A.; Errico, M. Analysis of hybrid separation schemes for levulinic acid separation by process intensification and assessment of thermophysical properties impact. *Sep. Purif. Technol.* **2023**, *310*, 123166. [CrossRef]
22. Alcocer-García, H.; Segovia-Hernández, J.G.; Sánchez-Ramírez, E.; Caceres-Barrera, C.R.; Hernández, S. Sequential synthesis methodology in the design and optimization of sustainable distillation sequences for levulinic acid purification. *Bioenergy Res.* **2024**, *17*, 1724–1738. [CrossRef]
23. Hinderer, S.; Brändle, L.; Kuckertz, A. Transition to a sustainable bioeconomy. *Sustainability* **2021**, *13*, 8232. [CrossRef]
24. Carvalho, A. Strategic sustainable assessment of retrofit design for process performance evaluation. In *Sustainability in the Design, Synthesis and Analysis of Chemical Engineering Processes*; Ruiz-Mercado, G., Cabezas, H., Eds.; Butterworth-Heinemann: Oxford, UK, 2016; pp. 249–273. [CrossRef]
25. Bejarano, P.-A.C.; Rodriguez-Miranda, J.-P.; Maldonado-Astudillo, R.I.; Maldonado-Astudillo, Y.I.; Salazar, R. Circular Economy Indicators for the Assessment of Waste and By-Products from the Palm Oil Sector. *Processes* **2022**, *10*, 903. [CrossRef]
26. Kowalski, Z.; Kulczycka, J.; Banach, M.; Makara, A. A complex circular-economy quality indicator for assessing production systems at the micro level. *Sustainability* **2023**, *15*, 13495. [CrossRef]
27. Serrano-Arévalo, T.I.; Díaz-Alvarado, F.A.; Tovar-Facio, J.; Ponce-Ortega, J.M. The impact of circular economy indicators in the optimal planning of energy systems. *Sustain. Prod. Consum.* **2024**, *44*, 234–249. [CrossRef]
28. Matos, J.; Martins, C.I.; Simoes, R. Circularity micro-indicators for plastic packaging and their relation to circular economy principles and design tools. *Sustainability* **2024**, *16*, 2182. [CrossRef]
29. Clark, C.E.; Han, J.; Burnham, A.; Dunn, J.B.; Wang, M. *Life-Cycle Analysis of Shale Gas and Natural Gas*; Technical Report ANL/ESD/11-11; Argonne National Laboratory: Argonne, IL, USA, 2011. Available online: https://publications.anl.gov/anlpubs/2012/01/72060.pdf (accessed on 1 October 2025).
30. Brit Boilers. SZS Series Gas Boiler. Available online: https://www.britboilers.com/products/szs-series-gas-boiler.html (accessed on 20 September 2025).
31. Barma, M.C.; Saidur, R.; Rahman, S.M.A.; Allouhi, A.; Akash, B.A.; Sait, S.M. A review on boilers energy use, energy savings, and emissions reductions. *Renew. Sustain. Energy Rev.* **2017**, *79*, 970–983. [CrossRef]
32. Bakkaloglu, S.; Cooper, J.; Hawkes, A. Methane emissions along biomethane and biogas supply chains are underestimated. *One Earth* **2022**, *5*, 724–736. [CrossRef]
33. Su, S.; Agnew, J. Catalytic combustion of coal mine ventilation air methane. *Fuel* **2006**, *85*, 1201–1210. [CrossRef]

34. Grubert, E.A.; Brandt, A.R. Three considerations for modeling natural gas system methane emissions in life cycle assessment. *J. Clean. Prod.* **2019**, *222*, 760–767. [CrossRef]
35. UNIDO. Manual for Industrial Steam Systems Assessment and Optimization. 2016. Available online: https://www.unido.org/sites/default/files/2017-11/SSO-Manual-Print-FINAL-20161109-One-Page-V2.pdf (accessed on 1 October 2025).

Disclaimer/Publisher's Note: The statements, opinions and data contained in all publications are solely those of the individual author(s) and contributor(s) and not of MDPI and/or the editor(s). MDPI and/or the editor(s) disclaim responsibility for any injury to people or property resulting from any ideas, methods, instructions or products referred to in the content.