education sciences

MDPI

Article

Teaching for Well-Being: Psychological Flexibility as a Bridge Between Teaching Methods and Burnout in Early Childhood and Primary Education

Concettina Caparello [1,*], Veronica Gardali [1], David Martínez-Maireles [1], Nicolina Pastena [1], Maria Núria Padrós-Tuneu [2] and Caterina Buzzai [1]

[1] Department of Classical, Linguistic and Educational Studies, Kore University of Enna, 94100 Enna, Italy; veronica.gardali@unikorestudent.it (V.G.); david.maireles@unikore.it (D.M.-M.); nicolina.pastena@unikore.it (N.P.); caterina.buzzai@unikore.it (C.B.)

[2] Department of Psychology, University of Vic–Central University of Catalonia, 08500 Vic, Spain; nuria.padros@uvic.cat

* Correspondence: concettina.caparello@unikore.it

Abstract

Teacher burnout may reflect the interplay between teaching practices and psychological flexibility, which may be relevant to teachers' responses to students' educational needs. Examining these relationships is particularly important in early childhood and primary education, which lays the foundations for students' subsequent learning and educational trajectories. This cross-sectional study examined associations between student- and teacher-centered teaching practices, psychological flexibility, and teacher burnout. A sample of 975 Italian teachers working in early childhood and primary education completed the Teaching Interactive Practices Questionnaire, the Acceptance and Action Questionnaire-II, and the Maslach Burnout Inventory—Educators Survey. Structural equation modeling (SEM) showed that student-centered practices were positively associated with psychological flexibility ($\beta = 0.19$, $p \leq 0.001$) and indirectly associated with lower emotional exhaustion ($\beta = -0.09$, $p \leq 0.01$), depersonalization ($\beta = -0.04$, $p \leq 0.01$), and reduced personal accomplishment ($\beta = -0.03$, $p \leq 0.05$). Conversely, teacher-centered practices were negatively associated with psychological flexibility ($\beta = -0.38$, $p \leq 0.001$) and indirectly associated with higher levels of emotional exhaustion ($\beta = 0.19$, $p \leq 0.001$), depersonalization ($\beta = 0.08$, $p \leq 0.001$), and reduced personal accomplishment ($\beta = 0.06$, $p \leq 0.01$). These findings highlight the importance of student-centered practices and psychological flexibility as factors associated with lower levels of teacher burnout. However, the cross-sectional design does not establish psychological flexibility as a causal mediating mechanism. The practical implications of the study and directions for future intervention research are discussed.

Keywords: teaching practices; psychological flexibility; teacher burnout; teacher well-being; primary school teachers

Check for updates

Academic Editor: Susanne Garvis

Received: 22 September 2026
Revised: 20 November 2026
Accepted: 23 November 2026
Published: 26 November 2026

Copyright: © 2026 by the authors. Licensee MDPI, Basel, Switzerland. This article is an open access article distributed under the terms and conditions of the Creative Commons Attribution (CC BY) license.

1. Introduction

Teaching practices are central to instruction and include the actions and strategies teachers use to organize, implement, and adapt it (Ghaizi et al., 2022). These practices are commonly classified into two broad types: teacher-centered and student-centered (Ghafar, 2023; Serin, 2018). Although both types of teaching practices aim to support students' learning and development, they differ in their understanding of the relationship between

teaching and learning and reflect distinct theories (Mascolo, 2009; Serin, 2018). These differences include the degree of agency afforded to teachers and students, the underlying assumptions about the nature of knowledge and the role of the teacher, and the function of classroom interaction (Serin, 2018). However, both approaches may contribute to students' learning, depending on how they are implemented and the contextual conditions (Amani & Fussy, 2025).

Teacher-centered practices are based on a transmissive model in which teachers control instructional content, pace, and classroom structure (Ghafar, 2023; Serin, 2018). Instruction may follow a lecture-based format, with communication patterns dominated by the teacher and limited opportunities for students to contribute their own ideas (Serin, 2018). Student participation may be framed primarily in terms of reproducing instructional content, particularly when teaching emphasizes rote learning and preparation for standardized tests (Ghaleb, 2024). These practices have often been described in relation to behaviorist principles, emphasizing repetition, reinforcement, and the mastery of foundational knowledge (Ghaleb, 2024; Serin, 2018). Teacher-centered practices offer advantages: they may allow for the efficient transmission of knowledge and provide structured guidance for addressing complex topics. Moreover, instruction can include clear explanations, useful feedback, and opportunities for guided practice (Ghafar, 2023; Amasha & Assadi, 2024). Research among rural primary school teachers has highlighted the perceived benefits of teacher-centered strategies when used in accordance with the content of the lesson (Ghaizi et al., 2022). However, these practices also have limitations: when opportunities for students to contribute their own ideas are restricted, they may limit student autonomy, active engagement, and opportunities for critical thinking (Ghafar, 2023; Serin, 2018). These limitations should therefore be considered in relation to how the practices are implemented, rather than as inherent characteristics of all teacher-centered instruction.

Student-centered practices reflect contemporary educational paradigms grounded in constructivist and sociocultural learning theories, emphasizing active knowledge construction, contextual understanding, and the social nature of cognitive development (Mascolo, 2009). The teacher's role shifts from that of a knowledge transmitter to that of a facilitator, supporting students as they explore, question, and co-construct understanding (Mameli & Molinari, 2017). A defining feature of these practices is dialogic communication, which provides opportunities for reciprocal, participatory interaction (Mameli & Molinari, 2017). Strategies such as group work, inquiry-based learning, and dialogic interactions can promote reflection, collaboration, and deeper cognitive engagement (Mat & Jamaludin, 2024). Student-centered practices offer numerous advantages: they foster learner autonomy, enhance students' ownership of learning, and can support motivation (Mat & Jamaludin, 2024). However, these practices also present certain limitations, such as the significant time required to prepare activities, as well as the challenges involved in managing interactions and monitoring groups—particularly in large classes. Furthermore, in the absence of structured guidance from the teacher, some students may feel disoriented and struggle to participate actively in learning activities (Amasha & Assadi, 2024). Research in early childhood and primary education has highlighted the contribution of both child-centered and teacher-centered approaches and the importance of combining active participation with teacher guidance (Amani & Fussy, 2025; Tang et al., 2017). The two approaches should therefore not be understood as mutually exclusive, in line with the view of learning as guided participation (Mascolo, 2009).

Previous studies have highlighted the importance of teaching practices for promoting meaningful learning in early childhood and primary education (Nicholas et al., 2021; Mat & Jamaludin, 2024). During this phase, the quality of teaching practices is relevant to how teachers respond to children's individual learning needs and support their participation in

classroom activities (Amani & Fussy, 2025; Kimer et al., 2016). Although the literature has examined the benefits and limitations of teacher-centered and student-centered practices for students' learning, research is increasingly exploring their implications for teachers' occupational health (Jõgi et al., 2023; Nwoko et al., 2023; Turner et al., 2021).

Teaching is an emotionally demanding profession, often associated with high levels of occupational stress and burnout (Holmström et al., 2023; Nwoko et al., 2023). Burnout is conceptualized as a multidimensional syndrome comprising emotional exhaustion, depersonalization, and reduced personal accomplishment (Maslach & Jackson, 1981; Maslach & Leiter, 2016). Emotional exhaustion reflects the depletion of emotional and physical resources in response to sustained demands. Depersonalization refers to the development of cynical or emotionally detached attitudes toward students and colleagues, often as a defense mechanism against frustration and disappointment. Reduced personal accomplishment involves negative self-evaluations regarding one's professional competence and effectiveness (Maslach & Leiter, 2016). Studies suggest that teaching practices are associated with teachers' burnout symptoms. Teacher-centered practices have been associated with higher emotional exhaustion, whereas practices promoting students' participation have been associated with lower emotional exhaustion and reduced feelings of professional inadequacy (Mameli & Molinari, 2017). Similarly, Amasha and Assadi (2024) reported associations between teaching styles that encourage students' active involvement and lower burnout. However, these findings do not indicate that teacher-centered practices are inherently harmful or that student-centered practices are uniformly beneficial. Their associations with burnout may depend on the demands involved in their implementation and the classroom conditions in which they are used.

Implementing student-centered practices may require substantial emotional investment, and psychological flexibility may be relevant to how teachers adapt instruction and manage classroom uncertainty. Rooted in Acceptance and Commitment Therapy (ACT; Hayes et al., 2011), psychological flexibility refers to the ability to remain present, open to internal experiences, and engaged in value-driven action. Psychological flexibility is a multidimensional construct encompassing acceptance of internal experiences, cognitive defusion from thoughts and emotions, mindful awareness of the present moment, self-as-context, values clarification, and committed action guided by personal values, even in the presence of discomfort (Hayes et al., 2011; Harris, 2019). Research increasingly highlights its relevance to psychological health (Kashdan & Rottenberg, 2010). Among secondary school teachers, research has identified associations between psychological flexibility and burnout dimensions (Erdem et al., 2024). Yildirim et al. (2024) also found that psychological flexibility was associated with greater job satisfaction and lower psychological distress among teachers. However, these findings are not uniformly supportive. Çelik and Tuzgöl Dost (2025) found that psychological flexibility was negatively correlated with burnout but did not significantly predict it in a model that included meaning in life and work engagement. Psychological flexibility may also be relevant to how teachers respond to challenging classroom experiences. Palmer (2025) reported partial support for an association between psychological inflexibility and more rigid perceptions of student behavior, while Pramesti et al. (2024), in a qualitative study involving four primary school teachers during the COVID-19 pandemic, described experiences of acceptance and adaptation in responding to teaching difficulties.

Research has examined psychological flexibility, understood as an individual psychological resource, and teaching practices, understood as instructional actions and strategies, in relation to burnout among teachers (Mameli & Molinari, 2017; Çelik & Tuzgöl Dost, 2025; Erdem et al., 2024). Nevertheless, from a theoretical perspective, the qualities relevant to implementing student-centered practices—such as openness, responsiveness, and adaptability

in dynamic classroom contexts—appear to be closely aligned with the core processes of psychological flexibility (Ateş & Sağar, 2022, 2024). Teachers who demonstrate higher levels of psychological flexibility may be better equipped to manage the inherent uncertainties of dialogic and interactive teaching, adjusting their strategies in real time to meet students' evolving needs. Palmer and Rogge (2026) found that teachers' mindful flexibility was associated with greater use of adaptive instructional and behavior management strategies and lower burnout. However, their study did not directly distinguish between student-centered and teacher-centered practices. Conversely, teachers with lower psychological flexibility may experience difficulties in revising established strategies when they become ineffective. This possibility should not be understood as equating teacher-centered practices with psychological rigidity, as structured instruction may represent an appropriate response to students' learning needs or contextual demands.

Despite growing interest in teaching practices and psychological flexibility, further research is needed to examine how they may jointly relate to burnout. In particular, it remains unclear whether psychological flexibility may represent an indirect pathway linking teaching practices to burnout. Examining these specific relationships in early childhood and primary school contexts is relevant given the emotional and relational demands placed on teachers and the importance of considering these demands in relation to teachers' occupational health (Nwoko et al., 2023).

To address these questions, the present study examined the associations between teaching practices, psychological flexibility, and burnout in a sample of Italian early childhood and primary school teachers. Specifically, we explored whether psychological flexibility might indirectly link the two types of teaching practices—teacher-centered and student-centered—to the three core dimensions of burnout: emotional exhaustion, depersonalization, and reduced personal accomplishment. Based on prior research and the theoretical considerations outlined above, we hypothesized that student-centered practices might be negatively associated with burnout and positively associated with psychological flexibility. In contrast, teacher-centered teaching practices might be positively related to burnout and negatively related to psychological flexibility. Moreover, we hypothesized an indirect association between teaching practices and burnout through psychological flexibility. These hypotheses concern associations rather than causal relationships and do not assume that either approach is uniformly beneficial or harmful across educational contexts.

The findings may contribute to a better understanding of the psychological and pedagogical factors associated with teacher burnout in early childhood and primary education. In addition, they may inform the development of school-based interventions and professional development programs aimed at fostering psychological flexibility and addressing teaching practices.

2. Materials and Methods

2.1. Participants

A total of 975 teachers working in Italian early childhood education and primary schools participated in the study. Participants ranged from 23 to 68 years of age ($M = 46.66$; $SD = 9.77$); 946 identified as women (97%) and 29 as men (3%). Teachers were recruited from different geographical areas of Italy: 300 (30.77%) from northern Italy, 225 from central Italy (23.08%), and 450 (46.15%) from southern Italy. Most participants taught exclusively in primary schools (87%, $n = 848$), followed by those teaching exclusively in early childhood education (12%, $n = 117$), with a small proportion teaching at both levels (1%, $n = 10$). Participants had an average of 18.85 years of teaching experience ($SD = 10.79$).

2.2. Instruments

A demographic questionnaire was used to collect participants' sociodemographic information (age, gender, and nationality) and professional characteristics (teaching level and years of teaching experience).

The Teaching Interactive Practices Questionnaire (Mameli & Molinari, 2017) was used to assess teachers' perceptions of their teaching practices and classroom interactions. The 17-item questionnaire originally distinguished three dimensions: student-centered practices focused on flexibility, student-centered practices focused on participation, and teacher-centered practices. In the present study, the two student-centered dimensions were combined to address our focus on the broader distinction between student-centered and teacher-centered teaching practices (Ghafar, 2023; Serin, 2018). This distinction concerns the roles assigned to teachers and students in classroom activities. Teacher-centered practices emphasize teacher direction and control over classroom interactions, whereas student-centered practices emphasize students' active contributions to the learning process. Within this broader framework, flexibility and participation capture different aspects of a student-centered orientation: flexibility concerns adapting classroom activities to students' emerging contributions, while participation concerns providing opportunities for all students to contribute. Combining these dimensions therefore reflected the conceptual scope of the present study while recognizing their distinct content. Accordingly, we examined student-centered practices through 10 items addressing students' participation and responsiveness to their contributions (e.g., *"I get my students involved and engaged during my lessons"*), and teacher-centered practices through 7 items addressing teacher-directed classroom interactions (e.g., "*I formulate questions for which there is only one correct answer*"). Items were rated on a 5-point Likert scale from 1 (never occurs in my lessons) to 5 (always occurs in my lessons). The instrument was originally developed in Italian by Mameli and Molinari (2017). In the current study, Cronbach's alpha was 0.76, and McDonald's omega was 0.77 for student-centered practices; Cronbach's alpha was 0.60, and McDonald's omega was 0.61 for teacher-centered practices. Confirmatory factor analysis of the two-factor model yielded $\chi^2(118) = 469$, $p < 0.001$, CFI = 0.90, RMSEA = 0.055, 90% CI [0.050, 0.061], and SRMR = 0.048. RMSEA and SRMR indicated favorable fit, although the CFI was at the conventional threshold for acceptable fit.

The Italian version of the Acceptance and Action Questionnaire-II (AAQ-II; Pennato et al., 2013) was used to assess psychological flexibility. It consists of 10 items (e.g., '*I worry about not being able to control my worries and feelings*') rated on a 7-point Likert scale ranging from 1 (never true) to 7 (always true). Items reflecting psychological inflexibility were reverse-coded so that higher scores indicated greater psychological flexibility. The instrument has been used in previous studies involving teachers (Botha, 2021; Faiza & Mahesh, 2026). In the present study, Cronbach's alpha was 0.80, and McDonald's omega was 0.81. A single-factor confirmatory factor analysis including all 10 items was conducted using maximum likelihood estimation. Model fit was less than satisfactory: $\chi^2(35) = 332$, $p < 0.001$, CFI = 0.91, RMSEA = 0.09, 90% CI [0.084, 0.103], and SRMR = 0.040.

The Italian version of the Maslach Burnout Inventory—Educators Survey (MBI-ES; Maslach et al., 1996; Sirigatti & Stefanile, 1993) was used to assess professional burnout among educators. The instrument comprises 22 items divided into three subscales: emotional exhaustion (9 items), which measures feelings of being emotionally depleted by work (e.g., *'I feel emotionally drained from my work'*); depersonalization (5 items), which assesses detached and impersonal attitudes toward students (e.g., *'I feel I treat some students as if they were impersonal objects'*); and personal accomplishment (8 items), which assesses teachers' perceived competence and achievement in their professional role (e.g., *'I have accomplished many worthwhile things in this job'*). Participants rated the frequency of each

experience on a 7-point Likert scale ranging from 0 (never) to 6 (every day). Personal accomplishment scores were reverse-coded to represent reduced personal accomplishment, with higher scores indicating greater burnout. The instrument has been used in previous studies involving teachers (Buzzai et al., 2024; Fiscone et al., 2026; Scarzello & Prino, 2025). In the present study, Cronbach's alpha was 0.88 and McDonald's omega was 0.89 for emotional exhaustion; Cronbach's alpha was 0.80 and McDonald's omega was 0.81 for reduced personal accomplishment; and Cronbach's alpha was 0.60 and McDonald's omega was 0.61 for depersonalization. Confirmatory factor analysis yielded an acceptable overall fit: $\chi^2(186) = 945$, $p < 0.001$, CFI = 0.90, RMSEA = 0.063, 90% CI [0.060, 0.068], and SRMR = 0.064.

2.3. Procedure

The study was conducted in accordance with the Code of Ethics of the Italian Association of Psychology (AIP) and the Declaration of Helsinki (2013). Ethical approval was granted by the University of Enna "Kore" (approval no. 22697; 9 November 2023).

Recruitment took place between March and June 2025 using a non-probability convenience sampling strategy. Early childhood and primary schools across Italy were approached through existing institutional collaborations with the researchers' university and contacts established through previous research projects. School principals were asked to circulate a study invitation and a link to the online questionnaire among their teaching staff. Teachers currently employed in early childhood and/or primary schools in Italy were eligible to participate.

Participation was voluntary, and informed consent was obtained before the questionnaire began. The questionnaire was administered via Google Forms and took approximately 20–30 min to complete. No identifying information was collected, and access to the dataset was restricted to the research team. Although responses to all items were mandatory, participants could discontinue the survey at any time before submission without penalty. Only submitted questionnaires were recorded; no responses from incomplete or unsubmitted questionnaires were collected. Participants were informed that their anonymous responses could not be identified or withdrawn after submission. A response rate could not be calculated because the number of teachers who received the invitation through school principals was unknown. The number of individuals who began but did not submit the questionnaire was also unavailable.

2.4. Data Analysis

Descriptive statistics, Pearson correlation coefficients, and internal consistency estimates (Cronbach's alpha) were computed using jamovi. Structural Equation Modeling (SEM) was conducted in R using the *lavaan* package (Rosseel, 2012). SEM enabled the simultaneous estimation of multiple relations and the modeling of latent constructs, thereby accounting for measurement error and capturing the shared variance among their observed indicators (Coffman & MacCallum, 2005; Kline, 2015; Iacobucci et al., 2007). Before parceling, item-level confirmatory factor analyses (CFA) were conducted to evaluate the hypothesized factor structure of each instrument in the study sample. The results are reported in the instruments section. Item parcels were subsequently used as indicators of the latent constructs, with items randomly assigned to parcels within their respective scales or subscales and each item contributing to a single indicator (Little et al., 2002; Matsunaga, 2008). Random assignment was chosen to avoid selecting item combinations on the basis of sample-specific factor loadings or their effects on model fit. Parceling reduced the number of observed indicators and freely estimated parameters relative to an item-level model (Little et al., 2002; Matsunaga, 2008). This approach may enhance indicator reliability, improve

model parsimony, reduce error variance, and produce indicators with distributions that more closely approximate normality (Hau & Marsh, 2004; MacCallum et al., 1999). The ten student-centered practice items were allocated to four parcels. The seven teacher-centered practice items and ten psychological flexibility items were allocated to three parcels each. Similarly, the nine emotional exhaustion items, five depersonalization items, and eight reduced personal accomplishment items were allocated to three indicators per dimension. Each indicator score was calculated as the mean of its constituent items. The exact allocation of items to indicators is reported in Table 1.

Table 1. Item Allocation to Observed Indicators of the Latent Constructs.

Latent Construct	Indicator	Constituent Items	Number of Items
Student-centered practices	PP1	3–7–10	3
	PP2	1–5–9	3
	PP3	2–8	2
	PP4	4–6	2
Teacher-centered practices	PI1	11–14–17	3
	PI2	12–16	2
	PI3	13–15	2
Psychological flexibility	FLE1	3–7–10	3
	FLE2	1–5–9	3
	FLE3	2–4–6–8	4
Emotional exhaustion	EX1	1–6–20	3
	EX2	3–8–16	3
	EX3	2–14–13	3
Depersonalization	CY1	11–22	2
	CY2	5–10	2
	CY3	15	1
Reduced personal accomplishment	RPA1	9–17–21	3
	RPA2	4–18	2
	RPA3	7–12–19	3

Note. Item numbers refer to the numbering used in the instruments administered in this study. Items were randomly assigned to indicators within their respective scales or subscales, with each item assigned to one indicator only. Indicator scores were calculated as the mean of their constituent items. For indicators comprising a single item, the item score was used directly.

We conducted sensitivity analyses to assess whether the hypothesized associations among student-centered and teacher-centered practices, psychological flexibility, and the three burnout dimensions remained stable across alternative measurement specifications and parceling strategies. Specifically, we estimated three models: (a) a path analysis, (b) a latent-variable model using an alternative random allocation of items to parcels, and (c) a latent-variable model using parcels constructed by combining items with higher and lower corrected item–total correlations. The results showed that the direct associations among student-centered practices, teacher-centered practices, psychological flexibility, and the three burnout dimensions (emotional exhaustion, depersonalization, and reduced personal accomplishment), as well as all specified indirect associations through psychological flexibility, retained the same direction and remained statistically significant across models. This consistency concerned the associations addressed by the study hypotheses. Some paths involving teaching experience varied in statistical significance across models, but teaching experience was included as a covariate, and its associations were not a focus of the present study. Full results, including the alternative item-to-parcel allocations and fit indices for the latent-variable models, are reported in the Supplementary Material (Tables S1–S6).

Model fit was evaluated using the chi-square statistics (χ^2), Comparative Fit Index (CFI), Root Mean Square Error of Approximation (RMSEA) with its 90% confidence interval, and Standardized Root Mean Square Residual (SRMR). Fit was considered acceptable when CFI was ≥0.90 and RMSEA and SRMR were ≤0.08, whereas CFI values ≥ 0.95 indicated a close fit (Kline, 2015). The hypothesized indirect associations of student-centered and teacher-centered practices with the three burnout dimensions through psychological flexibility were examined using 5000 bootstrap samples and 95% bias-corrected confidence intervals (Shrout & Bolger, 2002; Wu & Jia, 2013).

Teaching experience, measured as years in the teaching profession, was included as the sole covariate to account for its potential associations with teaching practices and teacher burnout. The adequacy of the sample size was evaluated in relation to the model complexity and the number of freely estimated parameters (Gye-Soo, 2018; Goodhue et al., 2012).

3. Results

3.1. Descriptive Statistics, Internal Consistency, and Correlations

Table 2 presents descriptive statistics, internal consistency estimates, and Pearson correlations among the study variables for the 975 participants.

Internal consistency was assessed using Cronbach's alpha and McDonald's omega. Student-centered practices showed satisfactory internal consistency ($\alpha = 0.76$, $\omega = 0.77$), whereas emotional exhaustion demonstrated good reliability ($\alpha = 0.88$, $\omega = 0.89$). Reduced personal accomplishment and psychological flexibility also showed good internal consistency (both $\alpha = 0.80$, $\omega = 0.81$). In contrast, teacher-centered practices and depersonalization yielded lower coefficients (both $\alpha = 0.60$, $\omega = 0.61$). These two subscales therefore showed limited internal consistency, and associations involving them should be interpreted cautiously (Ursachi et al., 2015).

Student-centered practices were positively correlated with psychological flexibility ($r = 0.19$, $p < 0.001$) and negatively correlated with emotional exhaustion, depersonalization, and reduced personal accomplishment ($r = -0.23$, -0.34, and -0.47, respectively; all $p < 0.001$). Teacher-centered practices showed the opposite pattern, correlating negatively with psychological flexibility ($r = -0.25$, $p < 0.001$) and positively with the three burnout dimensions ($r = 0.31$, 0.21, and 0.25, respectively; all $p < 0.001$). Psychological flexibility was negatively correlated with all three burnout dimensions ($r = -0.45$, -0.25, and -0.30, respectively; all $p < 0.001$), which were positively intercorrelated ($r = 0.37$–0.44, all $p < 0.001$).

3.2. Mediation

SEM with latent variables was used to examine the direct and indirect associations among teaching practices (student-centered and teacher-centered practices), psychological flexibility, and teacher burnout (emotional exhaustion, depersonalization, and reduced personal accomplishment).

The model showed an acceptable fit to the data: χ^2 (151) = 537.299, $p \leq 0.001$, CFI = 0.935, SRMR = 0.05, RMSEA (90% CI) = 0.051 (0.047, 0.056). All factor loadings were statistically significant and ranged from 0.18 to 0.87. All reported coefficients (β) are standardized estimates. Figure 1 presents the direct paths identified in the structural model.

Teaching experience was positively associated with student-centered practices ($\beta = 0.13$, $p \leq 0.001$). Student-centered practices were positively associated with psychological flexibility ($\beta = 0.19$, $p \leq 0.01$), whereas teacher-centered practices were negatively associated with psychological flexibility ($\beta = -0.38$, $p \leq 0.001$). Regarding the dimensions of teacher burnout, psychological flexibility ($\beta = -0.49$, $p \leq 0.001$) and student-centered practices ($\beta = -0.10$, $p \leq 0.01$) were negatively associated with emotional exhaustion, whereas

teacher-centered practices were positively associated with emotional exhaustion ($\beta = 0.24$, $p \leq 0.001$). Psychological flexibility ($\beta = -0.22$, $p \leq 0.001$) and student-centered practices ($\beta = -0.33$, $p \leq 0.001$) were also negatively associated with depersonalization, whereas teacher-centered practices were positively associated with depersonalization ($\beta = 0.22$, $p \leq 0.001$). Finally, psychological flexibility ($\beta = -0.16$, $p \leq 0.01$), student-centered practices ($\beta = -0.44$, $p \leq 0.001$), and teaching experience ($\beta = -0.09$, $p \leq 0.01$) were negatively associated with reduced personal accomplishment, whereas teacher-centered practices were positively associated with reduced personal accomplishment ($\beta = 0.39$, $p \leq 0.001$).

The results showed statistically significant indirect associations between teaching practices and teacher burnout through psychological flexibility (Table 3). Specifically, student-centered practices were indirectly associated with lower levels of burnout via increased psychological flexibility, as evidenced by the following significant indirect associations: from student-centered practices to emotional exhaustion via psychological flexibility ($\beta = -0.10$, $p \leq 0.01$); from student-centered practices to depersonalization via psychological flexibility ($\beta = -0.04$, $p \leq 0.05$); and from student-centered practices to reduced personal accomplishment via psychological flexibility ($\beta = -0.03$, $p \leq 0.05$). Conversely, teacher-centered practices were associated with higher levels of burnout through lower psychological flexibility, as indicated by the following indirect associations: from teacher-centered practices to emotional exhaustion via psychological flexibility ($\beta = 0.19$, $p \leq 0.001$); from teacher-centered practices to depersonalization via psychological flexibility ($\beta = 0.08$, $p \leq 0.01$); and from teacher-centered practices to reduced personal accomplishment via psychological flexibility ($\beta = 0.06$, $p \leq 0.01$).

Table 2. Descriptive Statistics, Internal Consistency, and Pearson Correlations Among the Study Variables.

	M	*SD*	Skewness	Kurtosis	Minimum	Maximum	1	2	3	4	5	6	
1. Teaching experience	18.85	10.7	0.26	−0.89	1	43							
2. Student-centered practices	4.74	0.4	−2.50	10.29	1	5	0.11 ***	α = 0.76 ω = 0.77					
3. Teacher-centered practices	2.99	0.5	0.14	−0.14	1	5	0.03	−0.12 ***	α = 0.60 ω = 0.61				
4. Emotional exhaustion	2.01	1.2	0.52	−0.40	0	6	−0.01	−0.23 ***	0.31 ***	α = 0.88 ω = 0.89			
5. Depersonalization	0.74	0.8	1.36	2.13	0	5	−0.10 **	−0.34 ***	0.21 ***	0.44 ***	α = 0.60 ω = 0.61		
6. Reduced personal accomplishment	1.46	0.8	0.63	0.78	0	5	−0.13 ***	−0.47 ***	0.25 ***	0.42 ***	0.37 ***	α = 0.80 ω = 0.81	
7. Psychological flexibility	4.80	0.7	−0.77	0.79	1	6	0.02	0.19 ***	−0.25 ***	−0.45 ***	−0.25 ***	−0.30 ***	α = 0.80 ω = 0.81

Note: n = 975. Internal consistency coefficients (Cronbach's α and McDonald's ω) are reported on the diagonal. ** $p < 0.01$, *** $p < 0.001$.

Table 3. Path Estimates, SEs and 95% Confidence Intervals for Tested Direct and Indirect Paths.

	B	*β*	*SE*	Lower Bound (BC) 95% CI	Upper Bound (BC) 95% CI	*p*
Direct Paths						
Teaching experience → student-centered practices	0.01	0.13	0.00	0.00	0.01	≤0.001
Teaching experience → teacher-centered practices	0.00	0.00	0.01	−0.01	0.01	0.970
Teaching experience → psychological flexibility	0.00	0.01	0.01	−0.02	0.02	0.840
Student-centered practices → psychological flexibility	1.40	0.19	0.43	0.66	2.33	≤0.01
Teacher-centered practices → psychological flexibility	−0.78	−0.38	0.17	−1.13	−0.47	≤0.001
Psychological flexibility → emotional exhaustion	−0.61	−0.49	0.09	−0.79	−0.45	≤0.001
Student-centered practices → emotional exhaustion	−0.88	−0.10	0.33	−1.58	−0.27	≤0.01
Teacher-centered practices → emotional exhaustion	0.60	0.24	0.13	0.35	0.88	≤0.001
Psychological flexibility → depersonalization	−0.10	−0.22	0.03	−0.16	−0.05	≤0.001
Student-centered practices → depersonalization	−1.11	−0.33	0.22	−1.59	−0.73	≤0.001
Teacher-centered practices → depersonalization	0.21	0.22	0.06	0.10	0.35	≤0.001
Psychological flexibility → reduced personal accomplishment	−0.10	−0.16	0.03	−0.17	−0.03	≤0.01
Student-centered practices → reduced personal accomplishment	−1.94	−0.44	0.28	−2.56	−1.46	≤0.001
Teacher-centered practices → reduced personal accomplishment	0.48	0.39	0.07	0.34	0.63	≤0.001
Teaching experience → reduced personal accomplishment	−0.02	−0.09	0.01	−0.02	−0.01	≤0.01
Teaching experience → emotional exhaustion	0.01	0.02	0.01	−0.01	0.03	0.409
Teaching experience → depersonalization	−0.01	−0.05	0.00	−0.02	0.00	0.150
Indirect Paths via psychological flexibility						
Student-centered practices → emotional exhaustion	−0.85	−0.10	0.29	−1.52	−0.39	≤0.01
Student-centered practices → depersonalization	−0.15	−0.04	0.06	−0.28	−0.05	≤0.05

Table 3. *Cont.*

	B	*β*	*SE*	Lower Bound (BC) 95% CI	Upper Bound (BC) 95% CI	*p*
Student-centered practices → reduced personal accomplishment	−0.13	−0.03	0.07	−0.29	−0.03	≤0.05
Teacher-centered practices → emotional exhaustion	0.47	0.19	0.11	0.28	0.70	≤0.001
Teacher-centered practices → depersonalization	0.08	0.08	0.03	0.04	0.13	≤0.01
Teacher-centered practices → reduced personal accomplishment	0.07	0.06	0.03	0.03	0.13	≤0.01

Note. B = unstandardized estimate; β = standardized estimate; SE = standard error of the unstandardized estimate; CI = confidence interval. Standard errors, confidence intervals, and *p* values refer to unstandardized estimates.

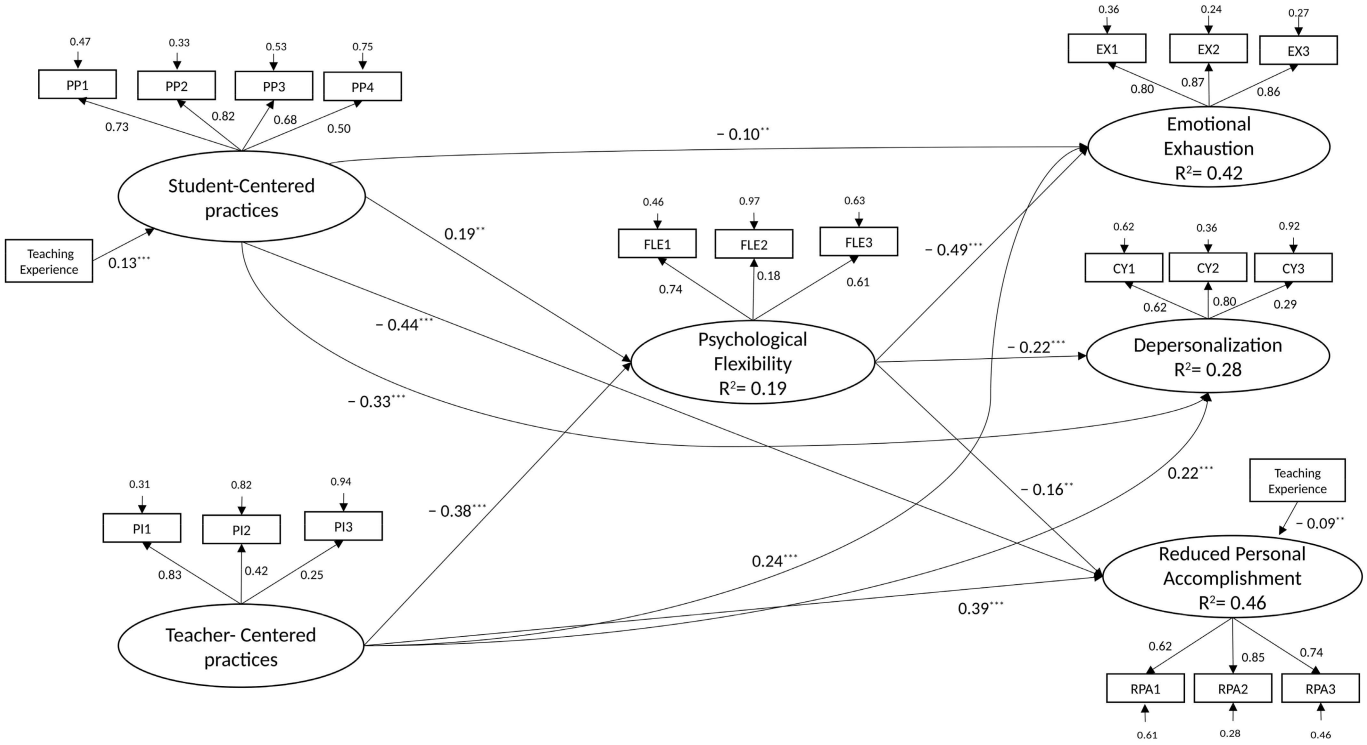

Figure 1. Structural model of direct associations. Note: n = 975; *** $p \leq 0.001$, ** $p \leq 0.01$. All coefficients shown are standardized direct path estimates (β). Nonsignificant paths have been omitted for clarity. Correlations: emotional exhaustion ↔ depersonalization: 0.42 ***; emotional exhaustion ↔ reduced personal accomplishment: 0.33 ***; depersonalization ↔ reduced personal accomplishment: 0.16 **.

4. Discussion

This study examined associations between student-centered and teacher-centered teaching practices, psychological flexibility, and three dimensions of burnout—emotional exhaustion, depersonalization, and reduced personal accomplishment—among 975 Italian early childhood and primary school teachers. It also examined the role of psychological flexibility in the relationship between teaching practices and burnout.

The results showed that student-centered practices were positively associated with psychological flexibility and were associated with lower emotional exhaustion and depersonalization and a stronger sense of personal accomplishment. Psychological flexibility also statistically accounted for part of the relationship between these practices and the three dimensions of burnout. A possible explanation lies in the distinct characteristics of student-centered practices. These practices require teachers to adapt to dynamic classroom contexts to promote meaningful learning experiences tailored to students' individual needs (Ghafar, 2023; Mat & Jamaludin, 2024; Serin, 2018). Such demands may provide opportunities for teachers to critically reflect on their own practices and revise ineffective strategies. Ongoing openness to change and students' perspectives allows teachers to exercise psychological flexibility by staying present, accepting emotions that naturally arise in classroom interactions, and maintaining actions consistent with educational values while responding to students' emerging needs. Such responses may be associated with lower emotional exhaustion and reduced depersonalization toward students. Encouraging students' participation may also provide teachers with opportunities to recognize their contribution to students' learning and maintain a sense of professional accomplishment. These findings are consistent with research linking student participation to lower emotional exhaustion and reduced feelings of professional inadequacy among primary and secondary school teachers (Mameli & Molinari, 2017). Similarly, Amasha and Assadi (2024) found that facilitating and delegating teaching styles were associated with lower burnout among primary and secondary school teachers. Further support comes from Palmer and Rogge (2026), who found that teachers' mindful flexibility was associated with greater use of adaptive instructional and behavior management strategies and lower burnout in a sample of K–12 teachers, although their study did not directly distinguish between student-centered and teacher-centered practices and used different measures of flexibility and burnout. Nevertheless, student-centered practices should not be assumed to involve fewer demands. Responding to individual learning needs and managing collaborative activities may also involve uncertainty and demanding interactions. Their associations with psychological flexibility and burnout may therefore depend on classroom conditions and the resources available to implement them.

Conversely, teacher-centered practices were negatively associated with psychological flexibility and were associated with higher emotional exhaustion, depersonalization, and reduced personal accomplishment, with significant indirect associations through psychological flexibility. A possible explanation is that maintaining control over classroom interactions may require sustained effort without necessarily ensuring students' engagement, potentially contributing to frustration and exhaustion (Mameli & Molinari, 2017). When teachers' efforts do not lead to the expected learning outcomes, they may also experience difficulties in feeling accomplished in achieving their educational goals. Lower psychological flexibility may be relevant to how teachers respond to these experiences, particularly when they maintain established strategies despite difficulties or limited student engagement. However, the negative association between teacher-centered practices and psychological flexibility should be interpreted cautiously. Although these practices may offer fewer opportunities for dialogue and shared decision-making, structured instruction may represent an appropriate response to specific learning needs or contextual demands. Its association with lower psychological flexibility may therefore depend on whether teachers adjust these practices to

changing circumstances or maintain them when they become ineffective. Moreover, Amasha and Assadi (2024) found that an expert teaching style was associated with higher burnout, whereas the association with formal authority was not significant. Although teaching styles do not directly correspond to the teaching practices examined in the present study, these findings suggest that structured teaching should not be assumed to be uniformly associated with higher burnout.

In addition, the three dimensions of burnout were negatively associated with psychological flexibility. A possible explanation lies in teachers' ability to pursue goals consistent with their personal and educational values while remaining open to difficult thoughts and emotions. Rather than avoiding or suppressing these experiences, psychologically flexible teachers may be able to maintain their engagement in meaningful educational activities despite stressful classroom situations. Acceptance, present-moment awareness, and value-consistent action may therefore represent relevant processes through which teachers navigate professional challenges, although these processes were not separately assessed in the present study. This interpretation is consistent with Rosado (2017), who reported associations between psychological inflexibility, emotional exhaustion, and depersonalization among Montessori school teachers, and with research linking psychological flexibility to burnout among secondary school teachers (Erdem et al., 2024). However, previous research has not consistently identified a significant predictive relationship. Çelik and Tuzgöl Dost (2025) found that psychological flexibility was negatively correlated with burnout but did not significantly predict it in a model that included meaning in life and work engagement. This finding suggests an alternative explanation for the present results: the association between psychological flexibility and burnout may partly reflect variance shared with other psychological and motivational resources. Differences in measurement, variables included in the models, and educational settings may also contribute to these findings. In particular, the present study included early childhood and primary school teachers, whereas Çelik and Tuzgöl Dost included teachers from different school levels. Whether these associations vary according to educational setting remains to be examined. The indirect associations observed should also be considered in relation to alternative explanations. Student-centered practices may provide opportunities for teachers to exercise psychological flexibility, while psychologically flexible teachers may also be more inclined to adopt these practices. Similarly, teachers experiencing less exhaustion and greater confidence in their professional abilities may have more resources to respond to students' perspectives and individual needs. Hwang (2021) found that teacher self-efficacy positively predicted student-centered practices among Korean eighth-grade mathematics teachers, while Jõgi et al. (2023) found that teachers reporting lower stress used relatively more student-centered practices in Grade 1 classrooms. Although these studies did not directly examine burnout, they support considering teachers' psychological experiences as possible contributors to instructional choices. Furthermore, working conditions may contribute to both teaching practices and psychological flexibility. Yildirim et al. (2024) found that occupational stress was associated with lower psychological flexibility, which was, in turn, associated with greater psychological distress and poorer work-related outcomes. Although their study did not examine burnout, these findings raise the possibility that stressful working conditions may contribute to both lower flexibility and greater exhaustion. Psychological flexibility may therefore represent one possible process connecting teaching practices and burnout, alongside other individual and contextual factors.

This study has some limitations that should be considered. The cross-sectional design limits causal inferences, and the indirect associations observed do not establish psychological flexibility as a mediating mechanism. Psychological flexibility may instead represent a characteristic associated with both teaching practices and burnout. Future studies should

adopt longitudinal designs to clarify the temporal ordering of these relationships and experimental designs to examine whether changes in psychological flexibility are followed by changes in burnout. In addition, the exclusive use of self-report measures administered in a single session may have introduced common method and social desirability biases (Podsakoff et al., 2003). Teachers may have overreported student-centered practices and underreported psychological difficulties or burnout symptoms, potentially affecting the strength of the direct and indirect associations observed. However, the extent and direction of these biases cannot be determined from the present data. Future studies should include multi-informant, observational, and behavioral data, as well as assessments conducted at different time points. The assessment of psychological flexibility also requires consideration. Although the AAQ-II offers a brief measure validated in Italian (Pennato et al., 2013), reversing its scores captures lower psychological inflexibility and experiential avoidance rather than the full range of psychological flexibility processes. Its overlap with psychological distress may also partly account for the associations observed with burnout (Wolgast, 2014). Explanations concerning specific flexibility processes should therefore be considered theoretical interpretations. Future studies could use multidimensional measures validated in Italian, such as the MPFI (Landi et al., 2021) or MPFI-24 (Landi et al., 2026), to examine their distinct associations with teaching practices and burnout. Moreover, the internal consistency of the teacher-centered practices and depersonalization subscales was relatively low ($\alpha = 0.60$ and $\omega = 0.61$ for both), and the associations involving these dimensions should therefore be interpreted cautiously. However, sensitivity analyses showed that the direction and statistical significance of the associations remained unchanged, suggesting the stability of the findings under the alternative specifications examined. Future studies could assess burnout using alternative instruments, such as the Burnout Assessment Tool (BAT; Angelini et al., 2021) or the Copenhagen Burnout Inventory (CBI; Fiorilli et al., 2015), which have previously been used with teachers. Teaching practices could also be examined using other measures, such as the Teaching and Learning International Survey (TALIS; OECD, 2021), which has been used with Italian primary school teachers. The sample consisted predominantly of Italian primary school teachers (87%) and women (97%), which may limit the generalizability of the findings. As separate analyses by educational level were not conducted, the conclusions primarily concern primary school teachers and should not be assumed to apply equally to early childhood teachers. Teaching experience was the sole covariate included in the models. Potential associations involving teaching level and other background characteristics were therefore not accounted for. Future research should consider additional theoretically relevant covariates and examine whether the observed associations hold within both early childhood and primary education. Moreover, participants were recruited through existing institutional collaborations and previous research contacts, using a non-probability sampling approach that may limit the representativeness of the sample. Voluntary participation in the online survey may also have introduced self-selection bias, limiting the generalizability of the findings to the broader population of primary school teachers in Italy. In addition, data on workload, class size, school climate, organizational support, and prior training in psychological flexibility were not collected. These factors may contribute to teachers' instructional choices, psychological flexibility, and burnout and may therefore partly explain the direct and indirect associations observed. Future studies should include these variables and replicate the findings in different cultural and educational contexts and with more diverse samples. A further limitation concerns the decision to combine student-centered practices focused on flexibility and student-centered practices focused on participation into a single student-centered dimension. Although this choice reflected the study's focus on the broader distinction between student-centered and teacher-centered practices (Ghafar, 2023; Serin, 2018), it may have obscured associations

specific to each dimension. In Mameli and Molinari's (2017) study, student-centered practices focused on participation were negatively associated with emotional exhaustion and low personal accomplishment, whereas student-centered practices focused on flexibility were positively associated with low personal accomplishment. Examining these dimensions separately would therefore help clarify whether they show distinct associations with the variables investigated in the present study.

Despite these limitations, the study contributes to the literature by highlighting psychological flexibility as a personal characteristic associated with lower levels of teacher burnout and by identifying associations between student-centered practices and lower emotional exhaustion, depersonalization, and reduced personal accomplishment. Focusing on a sample consisting predominantly of primary school teachers extends research within this educational setting, while the large sample size supports the precision of the estimates without removing the limitations associated with measurement and potential confounding. However, the statistical significance of the associations observed does not establish that changes in teaching practices or psychological flexibility would produce meaningful reductions in burnout.

5. Conclusions

The present study highlights the associations of teaching practices and psychological flexibility with burnout in a sample of Italian teachers working predominantly in primary education. The findings suggest that student-centered practices are positively associated with psychological flexibility and that both are negatively associated with emotional exhaustion, depersonalization, and reduced personal accomplishment. Conversely, teacher-centered practices are associated with lower psychological flexibility and higher levels of the three dimensions of burnout. Psychological flexibility was also statistically involved in the relationship between teaching practices and burnout. However, these findings do not establish whether psychological flexibility is a mediating mechanism or a characteristic associated with both teaching practices and burnout.

Future intervention research could examine the potential value of promoting student-centered practices and psychological flexibility, aligning instructional practices with personal values and professional goals. Professional development programs incorporating mindfulness-based strategies, reflective teaching, and Acceptance and Commitment Therapy could be examined for their potential to support teachers in remaining present, engaged, and values-driven under stress. Such studies could investigate whether these approaches help teachers sustain meaningful teacher–child interactions, strengthen personal accomplishment, and experience lower levels of emotional exhaustion and depersonalization. However, the present study did not test their effectiveness, and their effects on burnout should be evaluated in controlled intervention studies before recommendations for routine implementation are made. At the policy level, future research could examine the school conditions and organizational support needed to implement these programs, with the broader aim of lowering burnout risk and supporting the long-term sustainability of the teaching profession.

Supplementary Materials: The following supporting information can be downloaded at: https://www.mdpi.com/article/10.3390/educsci16122030/s1. Table S1. Model fit indices for the supplementary analyses (Model 1, Model 2, and Model 3). Table S2. Item-to-parcel allocation for the alternative random parceling strategy (Model 2). Table S3. Item-to-parcel allocation for the strategy combining items with higher and lower corrected item–total correlations (Model 3). Table S4. Direct and Indirect Associations in the Path Analysis Model (Model 1). Table S5. Direct and Indirect Associations in the Latent-Variable Model Using an Alternative Random Allocation of Items to Parcels (Model 2). Table

S6. Direct and Indirect Associations in the Latent-Variable Model Using Parcels Based on Corrected Item–Total Correlations (Model 3).

Author Contributions: Conceptualization, C.C., V.G., D.M.-M., N.P., M.N.P.-T. and C.B.; methodology, C.C., V.G., D.M.-M., and N.P.; formal analysis, C.C. and C.B.; investigation and data curation, V.G., D.M.-M., N.P., and M.N.P.-T.; writing—original draft preparation, C.C.; writing—review and editing, C.C., D.M.-M., and N.P.; supervision, C.B. All authors have read and agreed to the published version of the manuscript.

Funding: This research received no external funding.

Institutional Review Board Statement: The study was conducted in accordance with the Declaration of Helsinki, and approved by the Institutional Ethics Committee of University Kore of Enna (approval no. 22697; 9 November 2023).

Informed Consent Statement: Informed consent was obtained from all subjects involved in the study.

Data Availability Statement: The data supporting the findings of this study are available from the corresponding author, C.C., upon reasonable request.

Conflicts of Interest: The authors declare no conflicts of interest.

References

Amani, J., & Fussy, D. S. (2025). Balancing child-centred and teacher-centred didactic approaches in early years learning. *Education 3–13*, *53*(3), 353–365. [CrossRef]

Amasha, M., & Assadi, N. (2024). Teaching styles and self-efficacy as burnout predictors among teachers in Arab schools in Israel. *International Journal of Instruction*, *17*(2), 163–184. [CrossRef]

Angelini, G., Buonomo, I., Benevene, P., Consiglio, P., Romano, L., & Fiorilli, C. (2021). The burnout assessment tool (BAT): A contribution to Italian validation with teachers'. *Sustainability*, *13*(16), 9065. [CrossRef]

Ateş, B., & Sağar, M. E. (2022). The predictive role of psychological flexibility, self-efficacy and communication skills on life satisfaction in teacher candidates. *Cumhuriyet International Journal of Education*, *11*(1), 219–227. [CrossRef]

Ateş, B., & Sağar, M. E. (2024). Investigation of academic success, psychological flexibility and self-efficacy in teacher candidates. *Language Teaching and Educational Research*, *7*(1), 14–23. [CrossRef]

Botha, B. M. (2021). *Investigating the effects of an online ACT program on psychological flexibility, stress, and burnout rates among teachers* [Doctoral dissertation, The University of Waikato].

Buzzai, C., Pace, U., Aparici Aznar, M., & Passanisi, A. (2024). Understanding burnout among special education teachers: An exploratory structural equation model in a burnout high risk profession. *International Journal of Educational Management*, *38*(7), 2021–2033. [CrossRef]

Coffman, D. L., & MacCallum, R. C. (2005). Using parcels to convert path analysis models into latent variable models. *Multivariate Behavioral Research*, *40*(2), 235–259. [CrossRef] [PubMed]

Çelik, H., & Tuzgöl Dost, M. (2025). The effect of psychological flexibility, meaning in life, and work engagement on teacher burnout. *International Journal of Psychology and Educational Studies*, *12*(3), 214–227. [CrossRef]

Erdem, M., Altuntaş, H., & Tekinarslan, R. (2024). The predictive level of psychological flexibility on burnout. *Ahi Evran Üniversitesi Kırşehir Eğitim Fakültesi Dergisi*, *25*(2), 1307–1350. [CrossRef]

Faiza, & Mahesh, M. M. (2026). *Psychological flexibility and attitudes towards inclusive education among school teachers*. SSRN. Available online: https://papers.ssrn.com/sol3/papers.cfm?abstract_id=7582984 (accessed on 10 November 2026).

Fiorilli, C., De Stasio, S., Benevene, P., Iezzi, F. D., Pepe, A., & Albanese, O. (2015). Copenhagen Burnout Inventory (CBI): A validation study in an Italian teacher group. *TPM: Testing, Psychometrics, Methodology in Applied Psychology*, *22*(4), 537. [CrossRef]

Fiscone, C., Rania, N., Costa, C., Marzola, R., & Lagomarsino, F. (2026). Intercultural sensitivity and competence as predictors of well-being and burnout among early childhood education teachers: A quantitative study in the Italian context. *Intercultural Education*, 1–22. [CrossRef]

Ghafar, Z. N. (2023). The Teacher-centered and the student-centered: A comparison of two approaches. *International Journal of Arts and Humanities*, *1*(1), 18–23. [CrossRef]

Ghaizi, Z. A., Muhammad, A., Nordin, M. N., Hashim, S. N. A., Akim, T., Bahadin, S. A., & Halim, K. H. K. (2022). Teacher centered teaching strategies in Malaysia rural primary school. *Central Asia and the Caucasus*, *23*(1), 1674–1681.

Ghaleb, B. D. S. (2024). Effect of exam-focused and teacher-centered education systems on students' cognitive and psychological competencies. *International Journal of Multidisciplinary Approach Research and Science*, *2*(2), 611–631. [CrossRef]

Goodhue, D. L., Lewis, W., & Thompson, R. (2012). Does PLS have advantages for small sample size or nonnormal data? *MIS Quarterly*, *36*(3), 981–1001. [CrossRef]

Gye-Soo, K. (2018). Sample size determination in SEM (structural equation model) analysis. *International Journal of Trend in Research and Development*, *5*(4), 97–100.

Harris, R. (2019). *ACT made simple: An easy-to-read primer on acceptance and commitment therapy*. New Harbinger Publications.

Hau, K. T., & Marsh, H. W. (2004). The use of item parcels in structural equation modelling: Non-nomral data and small sample sizes. *The British Journal of Mathematical and Statistical Psychology*, *57*(2), 327–351. [CrossRef] [PubMed]

Hayes, S. C., Strosahl, K. D., & Wilson, K. G. (2011). *Acceptance and commitment therapy: The process and practice of mindful change*. Guilford Press.

Holmström, A., Tuominen, H., Laasanen, M., & Veermans, M. (2023). Teachers' work engagement and burnout profiles: Associations with sense of efficacy and interprofessional collaboration in school. *Teaching and Teacher Education*, *132*, 104251. [CrossRef]

Hwang, S. (2021). The mediating effects of self-efficacy and classroom stress on professional development and student-centered instruction. *International Journal of Instruction*, *14*(1), 1–16. [CrossRef]

Iacobucci, D., Saldanha, N., & Deng, X. (2007). A meditation on mediation: Evidence that structural equations models perform better than regressions. *Journal of Consumer Psychology*, *17*(2), 139–153. [CrossRef]

Jõgi, A.-L., Pakarinen, E., & Lerkkanen, M.-K. (2023). Teachers' physiological and self-reported stress, teaching practices and students' learning outcomes in Grade 1. *British Journal of Educational Psychology*, *93*(1), 211–226. [CrossRef] [PubMed]

Kashdan, T. B., & Rottenberg, J. (2010). Psychological flexibility as a fundamental aspect of health. *Clinical Psychology Review*, *30*(7), 865–878. [CrossRef] [PubMed]

Kimer, M., Tuul, M., & Õun, T. (2016). Implementation of different teaching approaches in early childhood education practices in Estonia. *Early Years*, *36*(4), 368–382. [CrossRef]

Kline, R. B. (2015). *Principles and practice of structural equation modeling*. Guilford Publications.

Landi, G., Bao, Z., Bruno, F., Pakenham, K. I., Chiesi, F., Tossani, E., & Grandi, S. (2026). Validation of the Italian multidimensional psychological flexibility inventory short form (MPFI-24). *Behavioral Sciences*, *16*(4), 510. [CrossRef] [PubMed]

Landi, G., Pakenham, K. I., Giovannetti, A. M., Presti, G., Boccolini, G., Cola, A., Grandi, S., & Tossani, E. (2021). Italian validation of the Italian multidimensional psychological flexibility inventory (MPFI). *Journal of Contextual Behavioral Science*, *21*, 57–65. [CrossRef]

Little, T. D., Cunningham, W. A., Shahar, G., & Widaman, K. F. (2002). To parcel or not to parcel: Exploring the question, weighing the merits. *Structural Equation Modeling*, *9*(2), 151–173. [CrossRef] [PubMed]

MacCallum, R. C., Widaman, K. F., Zhang, S., & Hong, S. (1999). Sample size in factor analysis. *Psychological Methods*, *4*, 84–99. [CrossRef]

Mameli, C., & Molinari, L. (2017). Teaching interactive practices and burnout: A study on Italian teachers. *European Journal of Psychology of Education*, *32*(2), 219–234. [CrossRef]

Mascolo, M. F. (2009). Beyond student-centered and teacher-centered pedagogy: Teaching and learning as guided participation. *Pedagogy and the Human Sciences*, *1*(1), 327.

Maslach, C., & Jackson, S. E. (1981). The measurement of experienced burnout. *Journal of Organizational Behavior*, *2*(2), 99–113. [CrossRef]

Maslach, C., Jackson, S. E., & Schwab, R. L. (1996). Maslach burnout inventory educators survey (MBI-ES). In C. Maslach, S. E. Jackson, & M. P. Leiter (Eds.), *MBI manual* (3rd ed.). Consulting Psychologists Press.

Maslach, C., & Leiter, M. P. (2016). Understanding the burnout experience: Recent research and its implications for psychiatry. *World Psychiatry*, *15*(2), 103–111. [CrossRef] [PubMed]

Mat, N. C., & Jamaludin, K. A. (2024). Effectiveness of practices and applications of student-centered teaching and learning in primary schools: A systematic literature review. *International Journal of Academic Research in Progressive Education and Development*, *13*(3), 1025–1044. [CrossRef] [PubMed]

Matsunaga, M. (2008). Item parceling in structural equation modeling: A primer. *Communication Methods and Measures*, *2*(4), 260–293. [CrossRef]

Nicholas, M., Rouse, E., & Paatsch, L. (2021). Child-centred teaching: Helping each child to reach their full potential. *Education Sciences*, *11*(6), 280. [CrossRef]

Nwoko, J. C., Emeto, T. I., Malau-Aduli, A. E., & Malau-Aduli, B. S. (2023). A systematic review of the factors that influence teachers' occupational wellbeing. *International Journal of Environmental Research and Public Health*, *20*(12), 6070. [CrossRef] [PubMed]

OECD. (2021). *Teachers getting the best out of their students: From primary to upper secondary education*. TALIS, OECD Publishing. [CrossRef]

Palmer, K. (2025). *The relationship between teachers' psychological flexibility and their perceptions of student behavior* [Doctoral dissertation, Boise State University]. [CrossRef]

Palmer, K., & Rogge, R. D. (2026). Flexible teachers, thriving classrooms: A unified flexibility and mindfulness (UFM) model of classroom dynamics, teaching practices, and teacher burnout. *Behavioral Sciences*, *16*(6), 1018. [CrossRef] [PubMed]

Pennato, T., Berrocal, C., Bernini, O., & Rivas, T. (2013). Italian version of the Acceptance and Action Questionnaire-II (AAQ-II): Dimensionality, reliability, convergent and criterion validity. *Journal of Psychopathology and Behavioral Assessment*, *35*, 552–563. [CrossRef]

Podsakoff, P. M., MacKenzie, S. B., Lee, J.-Y., & Podsakoff, N. P. (2003). Common method biases in behavioral research: A critical review of the literature and recommended remedies. *Journal of Applied Psychology*, *88*(5), 879–903. [CrossRef] [PubMed]

Pramesti, M. A., Hayati, E. N., & Bashori, K. (2024). 'We face obstacles with ikhlas': Reflection on psychological flexibility of elementary school teachers in rural Tegal, Central Java, during COVID-19 pandemic. *Psychosophia: Journal of Psychology, Religion, and Humanity*, *6*(1), 1–19. [CrossRef]

Rosado, M. A. (2017). *Evaluating the relationship between psychological flexibility, teacher self-efficacy, teacher-student interactions, and burnout syndrome* [Master's thesis, Southern Illinois University Carbondale]. OpenSIUC. Available online: https://opensiuc.lib.siu.edu/theses/2139/ (accessed on 10 November 2026).

Rosseel, Y. (2012). lavaan: An R package for structural equation modeling. *Journal of Statistical Software*, *48*(2), 1–36. [CrossRef]

Scarzello, D., & Prino, L. E. (2025). Teacher burnout in pre-schools: The role of alexithymia and job satisfaction. *Psychology in the Schools*, *62*(9), 3195–3207. [CrossRef]

Serin, H. (2018). A comparison of teacher-centered and student-centered approaches in educational settings. *International Journal of Social Sciences & Educational Studies*, *5*(1), 164–167. [CrossRef]

Shrout, P. E., & Bolger, N. (2002). Mediation in experimental and nonexperimental studies: New procedures and recommendations. *Psychological Methods*, *7*(4), 422–445. [CrossRef]

Sirigatti, S., & Stefanile, C. (1993). *MBI. Maslach burnout inventory. Adattamento italiano*. OS Organizzazioni Speciali.

Tang, X., Kikas, E., Pakarinen, E., Lerkkanen, M. K., Muotka, J., & Nurmi, J. E. (2017). Profiles of teaching practices and reading skills at the first and third grade in Finland and Estonia. *Teaching and Teacher Education*, *64*, 150–161. [CrossRef]

Turner, K., Thielking, M., & Meyer, D. (2021). Teacher wellbeing, teaching practice and student learning. *Issues in Educational Research*, *31*(4), 1293–1311. Available online: http://www.iier.org.au/iier31/turner.pdf (accessed on 10 November 2026).

Ursachi, G., Horodnic, I. A., & Zait, A. (2015). How reliable are measurement scales? External factors with indirect influence on reliability estimators. *Procedia Economics and Finance*, *20*, 679–686. [CrossRef]

Wolgast, M. (2014). What does the acceptance and action questionnaire (AAQ-II) really measure? *Behavior Therapy*, *45*(6), 831–839. [CrossRef] [PubMed]

Wu, W., & Jia, F. (2013). A new procedure to test mediation with missing data through nonparametric bootstrapping and multiple imputation. *Multivariate Behavioral Research*, *48*(5), 663–691. [CrossRef] [PubMed]

Yildirim, M., Dilekçi, Ü., & Manap, A. (2024). Mediating roles of meaning in life and psychological flexibility in the relationships between occupational stress and job satisfaction, job performance, and psychological distress in teachers. *Frontiers in Psychology*, *15*, 1349726. [CrossRef] [PubMed]

Disclaimer/Publisher's Note: The statements, opinions and data contained in all publications are solely those of the individual author(s) and contributor(s) and not of MDPI and/or the editor(s). MDPI and/or the editor(s) disclaim responsibility for any injury to people or property resulting from any ideas, methods, instructions or products referred to in the content.