agriculture

MDPI

Article

Design and Parameter Optimization of Fruit–Soil Separation Device of Lily Harvester

Zhenwei Dai [1,2], Mingliang Wu [1,3,*], Zhichao Fang [1,3] and Yongbo Qu [1]

[1] College of Mechanical and Electrical, Hunan Agricultural University, Changsha 410128, China; Daizhenwei@stu.hunau.edu.cn (Z.D.); fangzhichao@hunau.edu.cn (Z.F.); chenkaile@stu.hunau.edu.cn (Y.Q.)
[2] Hunan Mechanical & Electrical Polytechnic, Changsha 410151, China
[3] Hunan Provincial Engineering Technology Research Center for Modern Agricultural Equipment, Changsha 410128, China
* Correspondence: mlwu@hunau.edu.cn

Abstract: The mechanized harvesting of lily fruit in Southern China is affected by a high damage rate of lily fruit and low rate of soil breakage. The existing fruit–soil separation device is not suitable for heavy soil in Southern China. This study aimed to design a flexible fruit–soil separation device that can effectively reduce the damage rate of lily and improve the crushing rate of the soil. Thus, it would meet the requirements of southern lily fruit harvesting. In this study, the soil breaking rate and lily damage rate in the fruit–soil separation were taken as the assessment indexes, and the linear speed of the front conveyor belt, the inclination angle and the rotating speed of the fruit–soil separation device were recognized as the test factors. By performing the Box–Behnken test, three-factor and three-level experimental research on the fruit–soil separation device of the lily harvester was conducted. On this basis, a multiple regression model of the assessment indexes to the respective was built, the effect of various factors on the operation quality was analyzed and optimal operation parameters were determined. When the optimal parameter was adopted in the test (e.g., the linear speed of the front conveyor belt, the inclination angle and the speed of the fruit–soil separation device reaching 1.2 m·s^{-1}, 36° and 98 r·min^{-1}, respectively), the soil crushing rate was 92.8% and the lily damage rate reached 8.9%, and the fruit–soil separation effect satisfied the requirements of lily fruit harvest. The results could be referenced for other subsoil fruit harvesters and fruit–soil separation devices under heavy clay soil in Southern China.

Keywords: lily harvester; heavy clay soil; fruit–soil separation; damage; parameter optimization

check for updates

Citation: Dai, Z.; Wu, M.; Fang, Z.; Qu, Y. Design and Parameter Optimization of Fruit–Soil Separation Device of Lily Harvester. *Agriculture* **2022**, *12*, 175. https://doi.org/10.3390/agriculture12020175

Academic Editor: Rafael-Ruben Sola-Guirado

Received: 23 December 2021
Accepted: 24 January 2022
Published: 26 January 2022

Publisher's Note: MDPI stays neutral with regard to jurisdictional claims in published maps and institutional affiliations.

Copyright: © 2022 by the authors. Licensee MDPI, Basel, Switzerland. This article is an open access article distributed under the terms and conditions of the Creative Commons Attribution (CC BY) license (https://creativecommons.org/licenses/by/4.0/).

1. Introduction

Lily planting areas are majorly distributed in Eastern Asia, Europe and North America. Lily is planted in Hunan, Jiangxi, Gansu and other places in China. The planting area in China exceeds 20,000 hectares and has relatively high economic value. The lily fruit is oval, and the mass of a lily is in the range of 150–400 g. The lily fruits are bulbous onions of the lily plants, it is generally eaten or used as a Chinese medicinal, the above-ground green stalks are crushed and returned to the field. Currently, lily harvesting is essentially performed by manual excavation with low labor efficiency, so lily harvesting should be mechanized. The separation of lily fruit from soil particles is the critical procedure in the mechanized harvesting and its structural parameters and operating parameters significantly impact the soil fragmentation rate and the lily damage rate.

Existing literature and reports have been rare on the mechanization of lily harvesting. The studies on the harvesting mechanization of potato, sweet potato and other crops in foreign nations started earlier and the harvest operation is primarily performed by combine harvesters, which have various compound fruit–soil separation devices. The effect of the fruit–soil separation can be excellent, but it does not apply to the operation of heavy clay soil in Southern China [1–3]. The domestic harvesters available for reference largely

include potato, carrot, peanut and a series of rhizome crop harvesters [4–7] with relatively mature fruit–soil separation methods [8–11], which can be referenced for researching and developing fruit–soil separation devices of lily harvesters. Lv et al. [12–15] explored the mechanism of the soil fragmentation and the tuber damage in the potato soil separation. Wei et al. [16] proposed a high-frequency and low-amplitude vibration method to separate potato fruit from soil particles. Wang et al. [17] experimentally examined the parameters of the cleaning effect of the peanut soil cleaning mechanism and performed mathematical modeling. Yang et al. [18,19] conducted a theoretical analysis and an orthogonal test on the performance parameters of the potato plucking roller push-type fruit from a soil particle separation device. As revealed by the existing studies, the separation of crop fruit from soil particles under heavy clay soil has been rarely investigated in China and abroad. The fruit from soil particle separation devices for potato, carrot, peanut and other crops can achieve high separation effects under sandy loam soil in Northern China [3,20], whereas the separation effect of fruit–soil is poor for the operation of heavy clay soil in Southern China. Lily is planted in the heavy clay soil area of Southern China and the fruit from the soil particle separation device faces a low soil fragmentation rate and a high lily damage rate during the operation for lily harvesting. Accordingly, it is of great significance to develop a lily fruit–soil separation device suitable for heavy clay soil.

Given the above issues, a fruit–soil separation device for the lily harvester, suitable for heavy soil in Southern China, is designed in this paper. The lily harvester adopts a flexible fruit–soil separation device to achieve fruit–soil separation, which can effectively reduce the damage rate of lily. A screw conveying device is installed inside the soil separation device, contributing to an increase in the stroke of fruit–soil separation and the improvement of the crushing rate of the soil. On this basis, a bench test is conducted and the relevant parameters provide a reference for the further development of the lily harvester.

2. Materials and Methods

2.1. The Overall Structure and Working Principle

2.1.1. The Whole Structure and the Separation Mechanism Design of Fruit–Soil

The lily harvester was composed of an excavating device, front conveyor belt, fruit-soil separation device and other working parts. Its basic structure is illustrated in Figure 1. The fruit–soil separation device was a key component of the lily harvester, which was mainly composed of a circular ring, a spiral conveying blade, a driving shaft, as well as a soil crushing roller finger (Figure 2).

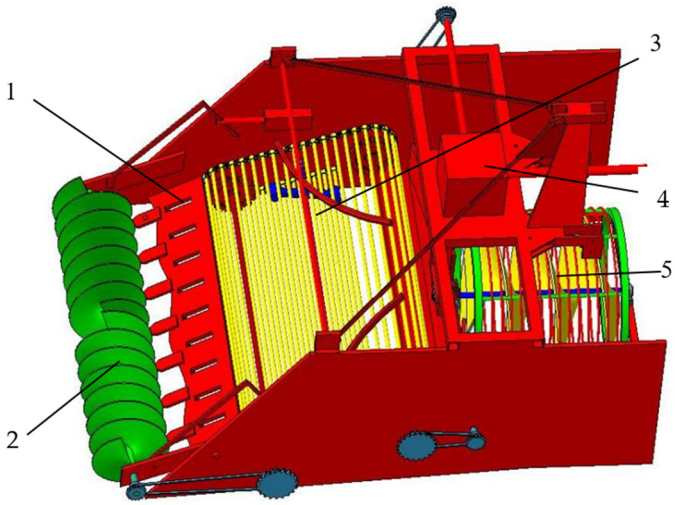

Figure 1. Lily harvester structure diagram. 1. Digging shovel; 2. Spiral digging knife; 3. Front conveyor; 4. Gearbox; 5. Flexible separation device.

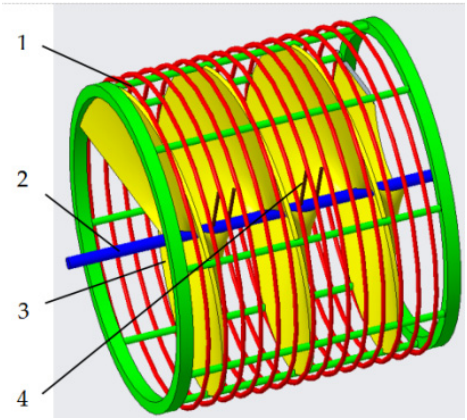

Figure 2. Flexible separation device for fruit–soil structure diagram. 1. Ring; 2. Drive shaft; 3. Spiral conveyor blade; 4. Broken soil roller.

The lily harvester is installed on the front end of the special tractor through a three-point suspension. The hydraulic motor on the special tractor is connected with the gearbox with a universal joint to transmit power. The front end of the lily harvester is equipped with a screw digging knife, which can dig the soil and transport the surface soil to both sides during harvesting to reduce the excavation resistance. The separated lily fruits are transferred to the ground, the intact lily fruits are picked up manually, and the broken bulbs are left in the soil, as illustrated in Figure 3.



(**a**) (**b**)

Figure 3. Photos of damaged and undamaged lily fruit samples. (**a**) Undamaged lily fruit samples; (**b**) Damaged lily fruit samples.

2.1.2. Working Principle

During the operation of the lily harvester, the fruit–soil mixture dug by the digging device is pushed back to the front conveyor belt. The fruit–soil mixture is thrown out and enters the fruit–soil separation device through the feeding port when it is conveyed back to the end of the front conveyor belt. The driving shaft of the fruit–soil separation device drives the spiral conveying blade to rotate together with the circumferential ring, and the fruit–soil mixture slides along the inner wall of the circumferential ring due to the action of centrifugal force. When the fruit–soil mixture slides to a certain height, it causes an oblique throwing motion under the action of sliding linear velocity and gravity and collides with the spiral conveying blade, resulting in a broken soil block. Moreover, the soil block could also be broken twice under the impact and collision of the soil crushing roller. Then, the broken soil block and a small number of lily fragments fall in the gap between the two rings. After the collision, the unbroken soil block and lily fall to the ground through the blanking mouth under the push of the spiral conveying blade.

2.1.3. Main Technical Parameters

The overall structure and key component parameters of the lily harvester are listed in Table 1.

Table 1. The whole structure and key component parameters of the lily harvester.

Parameter	Value
Machine Size (Length × Width × Height)/(mm×mm×mm)	2350 × 1600 × 1300
Engine Power/kW	44.7–59.6
Dimensions of Fruit–Soil Separation Unit/(mm × mm × mm)	950 × 500 × 500
Working Width/mm	1600
Digging Depth/mm	150~300 (Adjustable)
Driving Speed/(Km·h^{-1})	3–7
Working Efficiency/(m^2·h^{-1})	2000–4000

2.2. Analysis of Feeding Amount and Movement Process of Lily Fruit–Soil Separator

2.2.1. Analysis of Fruit–Soil Mixture Feeding Amount on the Front Conveyor Belt

The main function of the front conveyor belt is to feed the fruit–soil mixture into the fruit–soil separation device, so the feeding amount of the front conveyor belt should adapt to the crushing amount of the fruit–soil separation device. In other words, in the unit time t, the feeding amount of the front conveyor belt and the crushing amount of the fruit–soil separation device are, respectively:

$$\begin{cases} Q_1 = V_t t A h \\ Q_2 = \frac{\pi\left[(D+2\lambda)^2 - d^2\right]}{4} \cdot 60 \cdot \psi \cdot S \cdot n \cdot \delta \cdot C \cdot t \end{cases} \quad (1)$$

where Q_1 denotes the feeding amount of the front conveyor belt and its unit is m^3; V_t is the linear speed of the front conveyor belt, m/s; t is unit time, s; A is the width of the conveyor belt, mm; h represents the material height when conveying by the conveyor belt, mm; Q_2 is the crushing quantity of the fruit–soil separation device, m^3; D expresses the diameter of the fruit–soil separation device, mm; λ is the radial distance between the spiral blade and the device, mm; d is the diameter of the screw device, mm; ψ represents the filling coefficient; S is the cross-sectional area of the helix, m^2; n is the rotational speed of the fruit–soil separation device, r/min; δ is the bulk density of the conveying material, t/m^3; C denotes the coefficient. When β is 30°, the value of C is 0.82.

The fruit–soil separation device is a closed, annular-shaped space. When the feeding quantity (Q_1) of the front conveyor belt is larger than the crushing quantity (Q_2) of the fruit–soil separation device, the fruit–soil mixture fed by the front conveyor belt will pile up at the entrance of the fruit–soil separation device and cause choking. To avoid choking, the following should be satisfied:

$$V_t < \frac{15\pi\left[\left(\frac{R}{2} + 2\lambda\right)^2 - d^2\right]}{Ah} \psi \cdot S \cdot n \cdot \delta \cdot C \quad (2)$$

where R is the radius of the fruit–soil separation device, mm; λ is the radial distance between the spiral blade and the device, mm; d is the diameter of the screw device, mm.

According to Equation (2), the linear speed of the front conveyor belt (V_t) is related to the rotational speed of the fruit–soil separation device (n) and the radius of the fruit–soil separation device (R). The radius (R) of the fruit–soil separation device is determined by the working efficiency of the device, and R = 250 mm can be obtained by substituting the parameters into Equation (1).

2.2.2. Axial Kinematics Analysis of Fruit–Soil Mixture

In the fruit–soil separation, the movement direction of the fruit–soil mixture can be decomposed into the axial and radial motion and the spiral blade drives the fruit–soil mixture for axial movement [21,22]. If the spiral conveying blade rotates at an angular velocity of ω_2, the moving velocity of the soil block (V_n) at any point (point O) on the spiral conveying blade would be composed of axial velocity (V_z) and radial velocity (V_a). However, as impacted by the existence of friction between the soil block and the spiral conveying blade, the combined velocity should deflect a friction angle φ from the original value and be V_f. Its component on the Z-axis is expressed as V_z and its component in the circumferential direction is expressed as V_p (Figure 4).

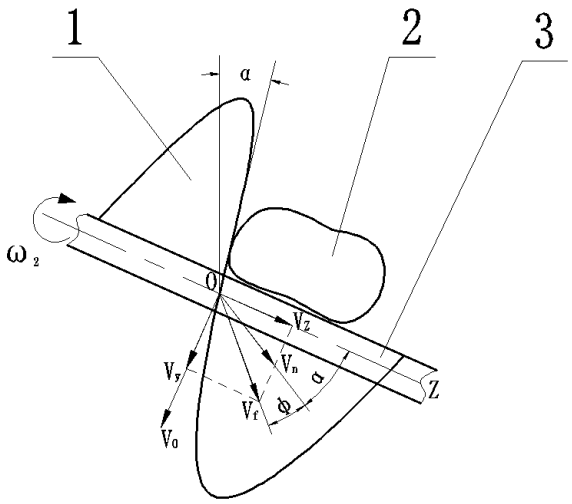

Figure 4. Analysis of axial movement process of fruit–soil mixture.1. Spiral conveyor blade; 2. Soil particle; 3. Drive shaft. (α is the tilt angle of the fruit–soil separation device, (°); Ø is the clod and friction angle of the helical blade, (°); ω_2 is the rotational angular velocity of the fruit–soil separation unit, rad·s^{-1}; V_0 is the involved motion velocity of O point on the spiral blade, m·s^{-1}; V_z is the axial velocity of the spiral blade, m·s^{-1}; V_f is the absolute velocity of the material on the spiral blade, m·s^{-1}; V_n is the synthesis speed of material on the spiral blade, m·s^{-1}).

As indicated above, the relation between relevant velocities is expressed as:

$$\begin{cases} V_z = V_f \cos(\alpha + \varphi) \\ V_f = V_n / \cos\varphi \\ V_n = V_a \sin\alpha \end{cases} \quad (3)$$

where α represents the inclination angle of the fruit–soil separation device, (°); Ø is the friction angle between the soil block and the spiral blade, (°); V_a denotes the implicated motion velocity of point O on the spiral blade, m·s^{-1}; V_z is the velocity of the spiral blade in the axial direction, m·s^{-1}; V_f represents the absolute velocity of the material on the spiral blade, m·s^{-1}; V_n expresses the synthesis speed of the material on the spiral blade, m·s^{-1}.

According to the above, the initial radial velocity is written as:

$$V_a = \omega_2 \gamma = \frac{Sn}{60tg\alpha} \quad (4)$$

Equations (3) and (4) can be obtained simultaneously as:

$$V_z = \frac{Sn}{60} \cos^2\alpha(1 - f\tan\alpha) \quad (5)$$

where S is the pitch of the screw conveying device, mm; n is the rotational speed of the fruit–soil separation device, r/min; α is the inclination angle of the fruit–soil separation device, (°); f denotes the friction coefficient between the soil block and the spiral blade.

According to Equation (5), when $1 - f \cdot \tan \alpha \leq 0$, i.e., $\alpha \leq 90° - Ø$, $V_z \leq 0$, the soil block and lily fruit will not be able to make the axial movement. Thus, the inclination angle of the fruit–soil separation device $\alpha \leq 90° - Ø$ is a necessary condition for the spiral conveying device to ensure the axial movement of the fruit–soil mixture. After determining the friction angle $Ø$ between the soil block and the spiral blade, the smooth axial movement of the fruit–soil mixture should be further ensured. The selection range of the inclination angle of the fruit–soil separation device was calculated as $10° \leq \alpha \leq 60°$.

2.2.3. Dynamic Analysis of Radial Impact of Fruit–Soil Separation

The fruit–soil mixture slides along the inner wall of the circular ring under the action of centrifugal force. When the soil block rotates to a certain height, the fruit–soil mixture causes the oblique throwing motion under the action of gravity Mg, the lily counters the elastic force F_t and angular velocity ω_1, and then the soil block collides with the spiral conveying blade. In addition, the soil crushing roller is rotated together with the fruit–soil separation device. During the rotation, the impact force F_R would be generated. Under the action of the two resultant forces, the soil particles would be broken and the broken soil would fall from the gap between the two rings. Its collision motion process is illustrated in Figure 5.

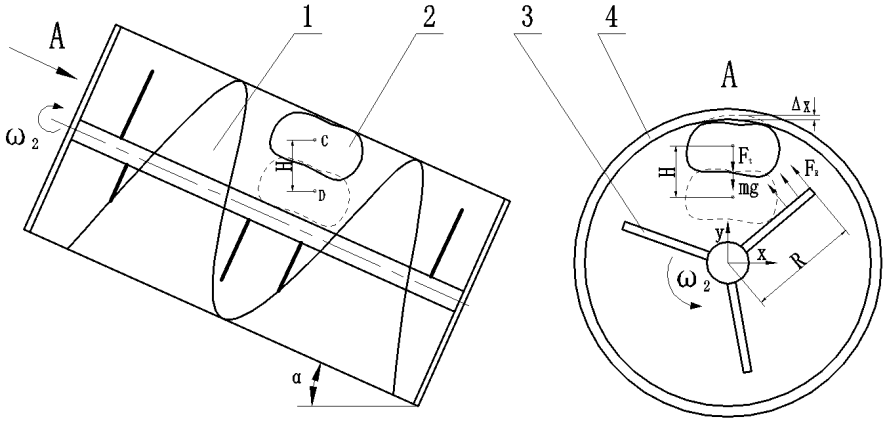

Figure 5. Dynamic analysis of radial collision in fruit–soil separation. 1. Spiral conveyor blade; 2. Massive soil; 3. Broken soil roller; 4. Rigid ring. (A represents the view direction; R is the length of the flexible roll finger, mm; ω_2 is the rotational angular velocity of the fruit–soil separator; rad/s; H is the height at which the large clods fall, mm; α is the tilt angle of the fruit–soil separation unit, (°); m is the mass of bulk soil, kg; F_t is the spring force of the elastic rope, N; Δx is the elasticity of the elastic rope shape variables, mm; F_R is the effect of large clods breaking, N).

The collision energy generated by the soil block falling from point C to point D consists of three parts, i.e., the weight potential energy from point C to point D, the elastic potential energy of lily rebound, as well as the instantaneous impact energy of the soil crushing roller. The sum of the energy is written as:

$$W_1 = mgH + F_t \Delta x + \frac{1}{2} j {\omega_2}^2 \quad (6)$$

where m is the mass of the soil block, kg; g is the acceleration of gravity, $m \cdot s^{-2}$; h expresses the height of the soil block falling, mm; F_t represents the recoil force of lily, N; Δx is the elastic shape variable of lily, mm; j is the moment of inertia of the soil crushing roller finger, $N \cdot m^{-1}$; ω_2 is the angular velocity of the fruit–soil separation device, $rad \cdot s^{-1}$.

The soil crushing roller collides with the soil block in the rotation. The impact energy of the soil crushing roller on the soil block is primarily determined by the rotational inertia and angular velocity. The angular velocity of the soil crushing roller is related to the rotational speed of the fruit–soil separation mechanism. The moment of inertia of the soil crushing roller is associated with its shape and radius size and its diameter D = 10 mm. In the fruit–soil separation, if the triaxial size of the broken soil is less than 80 mm, soil crushing occurs. Accordingly, the distance between the end of the soil crushing roller finger and the inner wall is 80 mm and the radius of the soil crushing roller finger L = 140 mm can be calculated. The equations for calculating the moment of inertia and angular velocity are written as:

$$\begin{cases} j = \frac{m_1}{4}\left(\frac{D^2}{4} + \frac{L^2}{3}\right) \\ \omega_2 = 2\pi n \end{cases} \tag{7}$$

where m_1 denotes the mass of the soil crushing roller, kg; D is the diameter of the soil crushing roller, mm; L is the length of the soil crushing roller, mm; n is the rotational speed of the fruit–soil separation device, r/min; π is the PI, taken as 3.14.

By substituting Equation (8) into Equation (7), the collision energy of large soil particles can be obtained as:

$$W_1 = mgH + F_t\Delta x + \frac{\pi m_1 n}{4}\left(\frac{D^2}{4} + \frac{L^2}{3}\right) \tag{8}$$

In the soil fragmentation, the impact energy of a large soil block can be converted into the product of the corresponding impact force F_R and the finite displacement distance Δs, as expressed below:

$$\begin{cases} W_2 = \sum F_R \cdot \Delta s \\ W_2 = W_1 \end{cases} \tag{9}$$

where W_2 denotes the impact energy of the soil block, J; F_R is the impact force of the large soil block breaking, N; Δs expresses the displacement distance of the effect of the soil block, mm.

Equations (9) and (10) can be obtained simultaneously:

$$F_R = \frac{mgH}{\Delta s} + \frac{F_t\Delta x}{\Delta s} + \frac{\pi m_1 n}{4\Delta s}\left(\frac{D^2}{4} + \frac{L^2}{3}\right) \tag{10}$$

To achieve the fragmentation of soil particles in the fruit–soil separation device, the value of impact force F_R could be obtained by substituting relevant parameters, which is 150~350 N. Moreover, to meet the requirements of soil block crushing, and under the fixed diameter of the fruit–soil separation device, the rotational speed n of the fruit–soil separation device could be changed, as an attempt to change the value of crushing impact force F_R. Thus, Equation (11) is rewritten as:

$$n = \frac{48(F_R\Delta s - mgH - F_t\Delta x)}{\pi m_1(3D^2 + 4L^2)} \tag{11}$$

According to Equation (11), when the relevant parameters are determined and the parameter value of impact force F_R is substituted, the rotational speed n of the fruit–soil separation device could be obtained, which is 50–130 r·min^{-1}. Moreover, by substituting the parameter values of the radius R and the rotational speed n of the fruit–soil separation device into Equation (2), the linear speed V_t of the front conveyor belt could be obtained, which is 0.8–2.0 m·s^{-1}.

According to Equations (2), (5) and (11), the impact force of the soil block and the spiral conveying blade is related to the rotational speed of the fruit–soil separation device n, the inclination angle of the fruit–soil separation device α and the linear speed of the front conveyor belt V_t. According to Equation (5), the inclination angle of the fruit–soil separation device is generally 10°~60°, the larger inclination angle would have a better conveying effect, and the fruit–soil separation time is short. However, the smaller inclination angle

exerts a poor conveying effect and the fruit–soil separation time is long. To better explore the effect of the inclination angle of the fruit–soil separation device on the fruit–soil separation and lily damage, the test value range was set as 15°~55°. When determining the rotational speed range of the fruit–soil separation device, the impact force of the soil crushing roller should be considered as well. The faster the rotational speed of the fruit–soil separation device, the better the soil crushing effect would be. However, the greater the impact force of the soil crushing roller, the greater the impact force of the crushing roller would be and the greater the lily damage would be, attributed to excessive impact in the fruit–soil separation, which would be not conducive to reducing the damage rate of lily. According to the above analysis and the theoretical calculation results, the range of linear velocity test of the front conveyor belt was selected as 0.8~2.0 m/s. The inclination angle of the fruit–soil separation device ranged from 15° to 55°. The rotational speed test of the fruit–soil separation device ranged from 50 to 110 r·min^{-1}.

3. Bench Test

3.1. Test Conditions and Test Equipment

The experiment was performed in October 2021 at the Agricultural Mechanization Engineering Training Center of Hunan Agricultural University. Hunan Longshan Xiluo lily varieties harvested in 3 days were selected for the experiment. The test soil type was heavy clay soil, the soil bulk density was 1.32 g·cm^3, the soil compactness was 128 kPa, and the water content was 15.6%. The lily tubers employed in the test presented no external damage and no broken surface bulb. The average length, width and thickness of a single lily tuber employed in the test were 90.2, 71.4 and 55.2 mm, respectively. The mass of lily tubers ranged from 150 to 350 g, with an average moisture content of 64.3%.

The test equipment consisted of the test bench for the lily fruit–soil separation device, a variable-frequency speed-regulating drive device, a speed-regulating motor (power 250 W, speed 1350 r·min^{-1}), an electronic scale, an electronic protractor, a tape measure, a meter gauge and a stopwatch. The test was performed on the test bench of the Lilium fruity soil separation device, which was mainly used for soil crushing and lily damage tests in the separation of Lilium fruity soil. The specific structure of the test bench is illustrated in Figure 6.

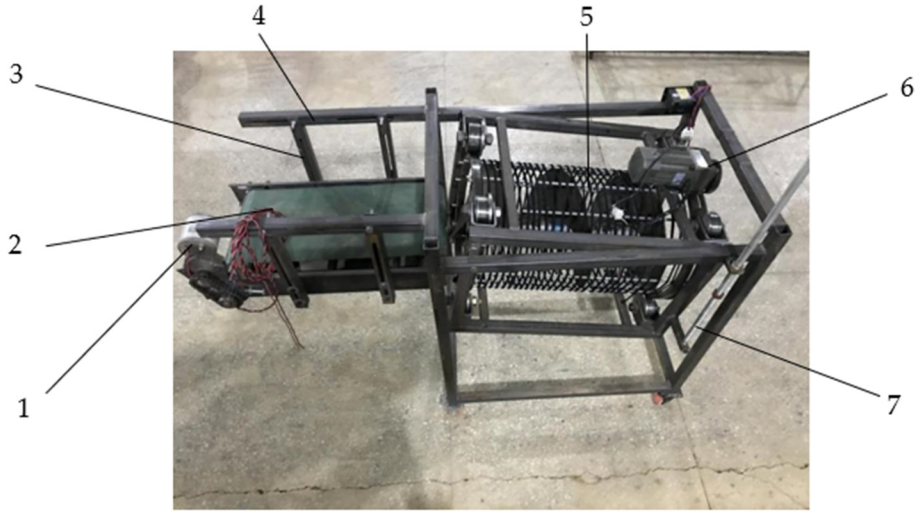

Figure 6. Test bench of lily fruit–soil separation. 1. The motor drives the front conveyor belt; 2. Front conveyor belt; 3. Height-regulating device; 4. Rack; 5. Separation device for fruit–soil; 6. The motor drives the fruit–soil separation unit; 7. Angle-adjusting device of the fruit–soil separation device.

3.2. The Assessment Index

At present, since there is no quality inspection standard for the fruit–soil separation of the lily harvester, the fruit–soil separation performance of the lily harvester in this study could be performed in accordance with the inspection standard of the "potato harvester". The comprehensive performance of the fruit–soil separation of the test device was determined by the degree of soil fragmentation and the damage degree of lily tubers during the fruit–soil separation. The mass sum of the shattered soil after the separation of lily tuber and heavy clay soil (set the soil block with the triaxial size less than 80 mm as the shattered soil) was termed the soil crushing rate. The damage of the lily tuber was divided into epidermal abrasions and lily flake abscission, and the mass sum of epidermal abrasions and lily flake was termed the damage rate. In this experiment, the weighing method was adopted to determine the soil fragmentation rate and lily damage rate during the separation of lily tuber and fruit soil. Moreover, the soil fragmentation rate and the lily damage rate could act as the assessment indexes of the lily tuber soil separation test.

Lily varieties from Hunan Longshan Xiluo were selected for the experiment and the difference in the tuber quality and shape was slight. Lilium and soil particles were weighed before each test and lily varieties with loss and damage were weighed after the test. Each group of tests was performed 5 times under identical conditions and the average value of the results was taken.

(1) Soil fragmentation rate

$$\sigma_1 = \frac{Q - S_1}{Q} \times 100\% \tag{12}$$

where σ_1 denotes the soil fragmentation rate, %; Q represents the total mass of soil before fruit–soil separation, kg; S_1 is the total weight of unshattered soil after the fruit–soil separation, kg.

(2) Lily damage rate

$$\sigma_2 = \frac{S_2 + S_3}{Q_1} \times 100\% \tag{13}$$

where σ_2 denotes the lily breakage rate, %; Q_1 is the total weight of lily before fruit–soil separation, kg; S_2 is the total weight of broken lily slices, Kg; S_3 is the total weight of broken and detached lily slices, kg.

3.3. Test Scheme and Results

The experiment was performed in compliance with the actual proportions of fruit and soil during the lily harvesting. During the harvesting, the yield of lily was around 18,000 kg/ha and the digging depth of the harvester was 0.25 m. Based on the calculation, the ratio of lily fruit to the soil in the fruit–soil separation was around 1:120. Before the test, the clay blocks from the test field were excavated for the test. The lilies applied in the experiment were harvested in the identical base in 3 days. The moisture content of the heavy clay soil was 15.6%, the proportion of heavy clay soil in the soil was more than 95%, sand and silt represented less than 5%, and there were no stones or rocks in the soil. The weighed clay blocks were mixed with lily fruit in proportion, and the placement amount of the fruit–soil mixture indicated the forward speed of the machine. Through the theoretical calculation, the fruit–soil mixture was placed at the front end of the front conveyor belt at a constant speed of 12.5 kg/min. The test time of the respective group was 5 min. After the test, the broken and damaged lilies were collected and then weighed at the lower end of the fruit–soil separation device and the discharge port. Moreover, the soil particles with a triaxial size greater than 80 mm were collected and then weighed at the discharge port. The average value was taken for the three groups of the parameter test. During the test, plastic cushions were laid on the unloading mouth of the lily fruit–soil separation device

to prevent the collision and impact of hundreds of tubers and soil particles falling to the ground, thereby probably affecting the test results.

The three-level and three-factor Box–Behnken test design method was adopted to perform the fruit–soil separation test. In this study, the linear speed of the front conveyor belt, the inclination angle of the fruit–soil separation device and the rotating speed of the fruit–soil separation device were taken as the test factors, and the soil breaking rate and the lily damage rate in the fruit–soil separation were selected as the assessment indexes. In particular, the linear velocity of the front conveyor belt was 0.8~2.0 m/s, the inclination angle of the fruit–soil separation device was 15°~55°, and the rotational speed test of the fruit–soil separation device ranged from 50 to 110 r/min. The linear speed of the front conveyor belt was controlled by regulating the speed of the driving motor of the front conveyor belt. The tilt angle of the fruit–soil separation device was controlled by regulating the installation position of the fruit–soil separation device on the frame with a screw. The speed of the fruit–soil separation device was controlled by regulating the speed of the driving motor of the fruit–soil separation device. The significance analysis of the factors of the test indicators was conducted based on the test results, and each parameter combination was optimized by complying with the mentioned actual demand and the parameter range, and a more appropriate factor combination was finally achieved [23,24]. The coding of test factors is listed in Table 2.

Table 2. Experimental factors' codes.

Levels	Experimental Factor		
e	**Front Conveyor Belt Line Speed ×1 (m/s)**	**Inclination Angle of Fruit–Soil Flexible Separation Unit ×2 (°)**	**Rotation Speed of Fruit–Soil Flexible Separation Unit ×3 (r/min)**
+1	0.8	15	50
0	1.4	35	80
−1	2.0	55	110

4. Results and Discussion

4.1. Experiment Scheme and Results

The test scheme and results are listed in Table 3.

Table 3. Experiment scheme and results.

Number.	Experimental Factor			Soil Fragmentation Rate *SFR*/%	Lily Injury Rate *LDR*/%
	X_1 (m/s) [1]	X_2 (°)	X_3 (r/min)		
1	0.0	0.0	0.0	90.6	7.8
2	0.0	0.0	0.0	91.3	7.9
3	0.0	−1.0	1.0	96.5	9.7
4	0.0	1.0	−1.0	83.0	5.2
5	1.0	−1.0	0.0	85.4	8.1
6	−1.0	0.0	−1.0	81.5	6.0
7	0.0	0.0	0.0	91.7	7.7
8	−1.0	0.0	1.0	94.6	9.1
9	−1.0	−1.0	0.0	87.6	8.0
10	1.0	0.0	−1.0	81.20	6.2
11	0.0	−1.0	−1.0	82.9	6.5
12	0.0	0.0	0.0	90.8	7.7
13	1.0	1.0	0.0	86.3	7.3
14	1.0	0.0	1.0	93.0	9.3
15	0.0	1.0	1.0	97.1	8.9
16	−1.0	1.0	0.0	88.9	7.2
17	0.0	0.0	0.0	91.1	7.9

[1] X_1, X_2, X_3 are the levels values of x_1, x_2, x_3, respectively, same as below.

4.2. Analysis of Test Results

4.2.1. Establishment and Significance Analysis of SFR Regression Model of the Soil Fragmentation Rate

Through the analysis and fitting of test data, the variance analysis of the soil fragmentation rate (SFR) is listed in Table 3. According to Table 3, for the test index of the soil fragmentation rate (SFR), the order of the primary and secondary effects of the factors and the interactions among factors was X_3, X_1^2, X_1, X_2^2, X_2, X_3^2, X_2X_3, X_1X_2, X_1X_3. In particular, X_3, X_1^2 and X_3^2 had extremely significant effects on the soil fragmentation rate (SFR) ($p < 0.01$). X_1 and X_2^2 significantly impacted the soil fragmentation rate (SFR) ($0.01 < p < 0.05$). The regression square and degrees of freedom of the insignificant interaction term were incorporated into the residual term, and the variance analysis was conducted again. The results are listed in Table 4. The regression equation of the effect of different factors on the soil fragmentation rate (SFR) was yielded:

$$SFR = 50.818 + 24.719X_1 + 0.169X_2 + 0.298X_3 - 0.009X_1X_2 - 0.018X_1X_3 + 0.0001X_2X_3 - 8.716X_1^2 - 0.002X_2^2 - 0.0004X_3^2 \quad (14)$$

Table 4. Variance analysis of regression equations.

Sources	Soil Fragmentation Rate (SFR)				Lily Injury Rate (LDR)			
	Sum of Squares	Degrees of Freedom	*F* Value	*p* Value [2]	Sum of Squares	Degrees of Freedom	*F* Value	*p* Value
Model	400.67	9	105.13	<0.0001	23.32	9	140.34	<0.0001
X_1	3.67	1	8.67	0.0216 *	0.0376	1	2.04	0.1964
X_2	0.7273	1	1.72	0.2314	1.75	1	94.65	<0.0001 **
X_3	200.77	1	474.08	<0.0001 **	12.86	1	696.86	<0.0001 **
X_1X_2	0.0506	1	0.1195	0.7397	0.002	1	0.1097	0.7502
X_2X_3	0.4032	1	0.9522	0.3617	0.0012	1	0.0664	0.8041
X_1X_3	0.0552	1	0.1304	0.7287	0.0552	1	2.99	0.1273
X_1^2	41.45	1	97.89	<0.0001 **	0.0062	1	0.3337	0.5816
X_2^2	3.21	1	7.57	0.0284 *	0.0406	1	2.2	0.1814
X_3^2	0.4946	1	1.17	<0.0001 **	0.0805	1	4.36	0.0752
Residual	2.96	7			0.1292	7		
Lack of Fit	2.19	3	3.8	0.1149	0.0727	3	1.72	0.3011
Pure Error	0.7699	4			0.0565	4		
Total	403.63	16			23.44	16		

[2] $p < 0.01$ (highly significant, **); $0.01 \leq p < 0.05$ (significant, *).

The loss of fit test was performed on the above regression equation, and the results are listed in Table 4. The loss of fit term $p = 0.1149$ ($p > 0.1$) indicated that the regression equation of the soil fragmentation had a high fitting degree, which proved that there were no other major factors of the test indexes. There was a significant quadratic relationship between the test indexes and the test factors, and the analysis results were reasonable.

4.2.2. Establishment and Significance Analysis of LDR Regression Model of the Lily Injury Rate

Through the analysis and fitting of the test data, the results of the variance analysis of the lily damage rate (LDR) are listed in Table 3. According to Table 3, for the lily damage rate (LDR), the order of influence of factors and interaction among factors was X_3, X_2, X_3^2, X_1X_3, X_2^2, X_1, X_1^2, X_1X_2, X_2X_3. The effects of X_2 and X_3 on the lily damage rate (LDR) were extremely significant ($p < 0.01$). The regression square and degrees of freedom of the insignificant interaction term were incorporated into the residual term, and the variance analysis was conducted again. The results are listed in Table 4. The regression equation of the effect of different factors on the lily damage rate (LDR) was obtained:

$$LDR = 3.179 + 0.426X_1\text{-}0.025X_2 + 0.073X_3 + 0.002X_1X_2 - 0.001X_1X_3 + 0.0002X_2X_3 - 0.106X_1^2 - 0.0002X_2^2 - 0.0001X_3^2 \quad (15)$$

The loss of fit test was performed on the mentioned regression equation, and the results are listed in Table 4. The loss of fit term $p = 0.3011$ ($p > 0.1$) indicated the lily damage rate (LDR). The fitting degree of the regression equation was high, which proved that there were no other main factors of the test index. A significant quadratic relationship was identified between the test indexes and the test factors, and the analysis results were reasonable.

4.2.3. Response Surface Analysis

Through data processing with Desk-Expert 12.0.1 software [25,26], the response surface of the effect of significant and relatively significant interactions among the linear velocity of the front conveyor belt X_1, the oblique angle of the fruit–soil separation device X_2 and the speed of the fruit–soil separation device X_3 on the two test indexes of soil breakage rate (SFR) and lily damage rate (LDR) were obtained (Figure 7).

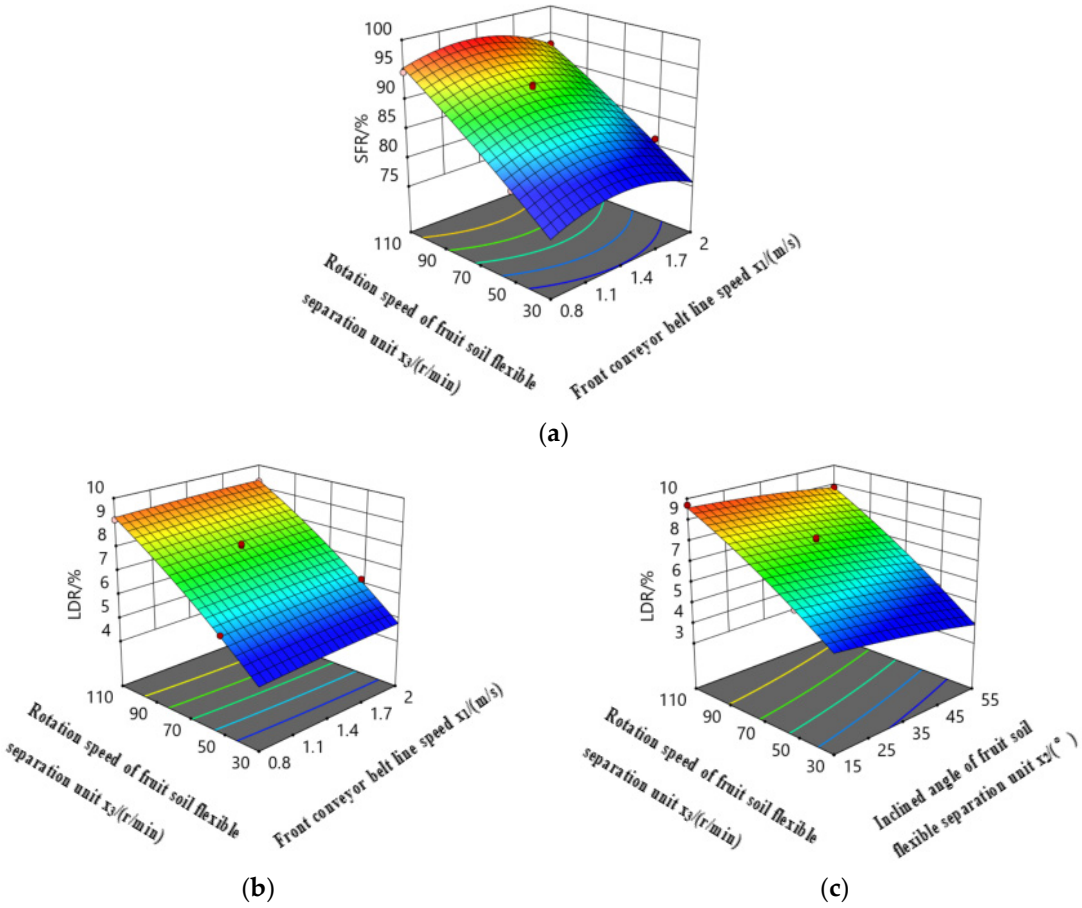

Figure 7. Response surfaces of interactive factors influencing test indexes. (**a**) SFR = f(x_1, 0, x_3); (**b**) LDR = f(x_1, 0, x_3); (**c**) LDR = f(0, x_2, x_3).

As Figure 7 shows, this study separately analyzed the influences of the interactive factors x_1x_2, x_1x_3 and x_2x_3 on SFR and LDR. The interaction of x_1 and x_3 on SFR with $x_2 = 35°$ is exhibited in Figure 7a. The SFR increased with x_1 to the maximum, before gradually decreasing. This was because, as x_3 decreased, the soil block could easily cause accumulation at the front end of the front conveyor belt, and the feeding amount of the fruit–soil separation device was extremely small. Accordingly, the soil block was not broken in time. With the increase in x_3, the feeding amount of the fruit–soil separation device was overly large, the soil particles could easily accumulate at the feeding port of the fruit–soil separation device and then fall from the feeding port, and the soil particles could not be effectively broken. Thus, too large or too small x_3 resulted in a reduction in SFR.

Given the analysis in Figure 7b, x_1 and x_3 were all positively correlated with LDR. This was because the reduced x_3 would lead to the smaller kinetic energy of lily and the lower impact force; a smaller degree of skin damage after the collision between the lily and the fruit–soil separation device can decrease LDR. Moreover, as x_1 increased, the larger friction force could be attributed to the accumulation of soil and lily in the device. Moreover, the lily could easily be fractured by friction, and the LDR could be improved. The analysis in Figure 7c indicates that, with the decrease in x_2, the conveying efficiency of the spiral conveying blade decreased, and the collision times of lily in the fruit–soil separation device increased. Finally, the LDR was improved.

4.3. Parameter Optimization and Verification Test

4.3.1. Parameter Optimization

To achieve the optimal working effect of the fruit–soil separation mechanism of the lily harvester, the fruit–soil separation effect of the lily harvester should be high and the damage degree of lily should be small. Since the effect of the respective on the target value was not consistent, global multi-objective optimization needed to be conducted. Taking the rate of soil breakage and lily damage rate as the objective function, the linear speed of the front conveyor belt, the inclination angle of the fruit–soil separation device and the rotational speed of the fruit–soil separation device were optimized and the optimization constraint conditions can be expressed as:

$$\begin{cases} \text{MaxSFR}\ (X_1, X_2, X_3) \\ \text{MinLDR}\ (X_1, X_2, X_3) \\ -1 \le X_1, X_2, X_3 \le 1 \\ 90\% \le \text{SFR} \le 100\% \\ 0 \le \text{LDR} \le 10\% \end{cases} \tag{16}$$

The parameters were optimized with Desk-Expert 12.0.1 software to achieve the optimal combination of working parameters [27]. When the linear speed of the front conveyor belt of the fruit–soil separation device of the lily harvester was 1.2 m/s, the tilt angle of the fruit–soil separation device was 36.9° and the speed of the fruit–soil separation device was 98.8 r/min; the soil fragmentation rate reached 94.7% and the lily damage rate was 8.2% during the operation of the fruit–soil separation mechanism.

4.3.2. Verification Test

To verify the accuracy of the regression equation, the optimized combined parameters were applied for the test verification. The test verification method was identical to the orthogonal test, and the separation effect of the fruit–soil separation device of the lily harvester after the improved design and the optimized adjustment was verified; then, a comparison with the standard operating indicators was made to assess the separation performance of the fruit–soil separation device of the lily harvester.

Combined with the mechanical design requirements and the actual working conditions of the test process, the optimized theoretical value was rounded and the linear speed of the front conveyor belt was set as 1.2 $m \cdot s^{-1}$, the tilt angle of the fruit–soil separation device was set as 36°, and the rotational speed of the fruit–soil separation device was set as 98 $r \cdot min^{-1}$. The verification tests were performed on the above factors and the measured results were the average values of five measurements. It was measured that the soil fragmentation rate of the fruit–soil separation device of the lily harvester was 92.8% and the lily damage rate was 8.9%. The verification results were close to the relevant standards. As indicated by the verification tests, the relevant optimization combination was reasonable and the lily harvester fruit–soil separation device adjusted according to the optimized parameters was capable of effectively improving the separation effect of lily fruit–soil, reducing the damage degree of lily and meeting the operation requirements.

5. Conclusions

To solve the problems of a low soil breakage rate and a high lily breakage rate in the lily harvester, this study designed a separation mechanism of lily fruit–soil and conducted kinematics and dynamics analysis on the mechanism according to the state of lily fruit–soil in the separation. Through the analysis, three adjustable factors of the quality of lily–soil separation were obtained, i.e., the linear speed of the front conveyor belt, the inclination angle of the fruit–soil separation device and the rotational speed of the fruit–soil separation device.

Through the bench test of the separation of lily fruit–soil, the regression mathematical model between the test indexes and the factors was built. Based on the Box–Behnken central combination method, a three-factor and three-level regression orthogonal test was designed and performed and a quadratic polynomial regression model was built for the three factors of the soil fragmentation rate and the lily damage rate for the assessment index of the lily fruit–soil separation. Optimal parameters were obtained through experiments: the linear speed of the current conveyor belt was 1.2 $m \cdot s^{-1}$, the inclination angle of the fruit–soil separation device was 36°, the speed of the fruit–soil separation device was 98 $r \cdot min^{-1}$, the corresponding assessment index soil crushing rate reached 92.8%, and the lily damage rate was 8.9%.

Author Contributions: Conceptualization, Z.D. and M.W.; methodology, Z.D.; software, Z.F.; validation, Y.Q., Z.F. and Z.D.; formal analysis, M.W.; investigation, Y.Q.; resources, M.W.; data curation, Z.D.; writing—original draft preparation, Z.D.; writing—review and editing, Z.D.; visualization, Z.D.; supervision, M.W.; project administration, Z.F.; funding acquisition, Z.F. All authors have read and agreed to the published version of the manuscript.

Funding: This research was funded by Hunan Provincial Natural Science Foundation of China, grant number "2021JJ60044".

Data Availability Statement: All data are presented in this article in the form of figures and tables.

Conflicts of Interest: The authors declare no conflict of interest.

References

1. Campbell, A.; Birt, I.; MacKinnon, B. Modifications of a potato harvester for small plot field research. *Am. Potato J.* **1990**, *67*, 799–803.
2. Kempenaar, C.; Struik, P. The canon of potato science: 33. *Haulm killing. Potato Res.* **2007**, *50*, 341–345. [CrossRef]
3. Shmulevich, I. State of the art modeling of soil–tillage interaction using discrete element method. *Soil Tillage Res.* **2019**, *111*, 41–53. [CrossRef]
4. Vallone, M.; Alleri, M.; Bono, F.; Catania, P. A New Wireless Device for Real-Time Mechanical Impact Evaluation in a Citrus Packing Line. *Trans. ASABE* **2020**, *63*, 1–9. [CrossRef]
5. Zhou, K.; Leck Jensen, A.; Bochtis, D. Simulation model for the sequential in-field machinery operations in a potato production system. *Comput. Electron. Agric.* **2015**, *6*, 173–186. [CrossRef]
6. Herold, B.; Geyer, M.; Studman, C.J. Fruit contact pressure distributions—Equipment. *Comput. Electron. Agric.* **2020**, *32*, 167–179. [CrossRef]
7. Berardinelli, A.; Donati, V.; Giunchi, A. Damage to pears caused by simulated transport. *J. Food Eng.* **2015**, *66*, 219–226. [CrossRef]
8. Afshari, H.; Saeid, M.; Morteza, A. Examination potato damage under impact loading. *Iran. J. Foodence Technol.* **2018**, *5*, 69–80.
9. Rymuza, K.; Bombik, A.; Stopa, D. The Effect of Potato Ridge Height and Harvest Date on Tuber Injuries. *J. Plant Prot. Res.* **2014**, *54*, 225–230. [CrossRef]
10. Jarimopas, B.; Singh, S.P.; Saengnil, W. Measurement and analysis of truck transport vibration levels and damage to packaged tangerines during transit. *Packag. Technol. Sci.* **2018**, *18*, 179–188. [CrossRef]
11. Bentini, M.; Caprara, C.; Martelli, R. Harvesting Damage to Potato Tubers by Analysis of Impacts recorded with an Instrumented Sphere. *Biosyst. Eng.* **2016**, *94*, 75–85. [CrossRef]
12. Lü, J.; Tian, Z.; Wu, J. Design and experiment on 4U1Z vibrating potato digger. *Trans. Chin. Soc. Agric. Eng. Trans. CSAE* **2019**, *31*, 39–47.
13. Lü, J.; Tian, Z.; Yang, Y.; Shang, Q.; Wu, J. Design and experimental analysis of 4U2A type double-row potato digger. *Trans. Chin. Soc. Agric. Eng.* **2018**, *31*, 17–24.
14. Rady, A.M.; Soliman, N. Evaluation of Mechanical Damage of Lady Rosetta Potato Tubers Using Different Methods. *Int. J. Postharvest Technol. Innov.* **2019**, *5*, 125. [CrossRef]

15. Celik, H.K.; Rennie, A.; Akinci, I. Reverse engineering approach for precise measurement of the physical attributes related to the geometric features of agricultural products. *J. Food Meas. Charact.* **2016**, *11*, 117–129. [CrossRef]
16. Wei, Z.; Li, H.; Su, G. Development of potato harvester with buffer type potato-impurity separation sieve. *Trans. Chin. Soc. Agric. Eng.* **2019**, *35*, 1–11.
17. Wang, D.; Shang, S.; Han, K. Design and test of 4HJL-2 harvester for peanut picking-up and fruit-picking. *Trans. Chin. Soc. Agric. Eng.* **2018**, *29*, 27–36.
18. Yang, R.; Yang, H.; Shang, S. Design and Test of Poking Roller Shoving Type Potato Harvester. *Trans. Chin. Soc. Agric. Mach.* **2016**, *47*, 119–126.
19. Yang, R.; Yang, H.; Shang, S. Design and experiment of vertical circular separating and conveying device for potato combine harvester. *Trans. Chin. Soc. Agric. Eng.* **2018**, *34*, 10–18.
20. Lü, J.; Sun, H.; Dui, H. Design and Experiment on Conveyor Separation Device of Potato Digger under Heavy Soil Condition. *Trans. Chin. Soc. Agric. Mach.* **2017**, *48*, 146–155.
21. Zi, L.; Baokang, K.; Yi, J. *Agricultural Mechanics*, 2nd ed.; China Agricultural Press: Beijing, China, 1996; pp. 46–67.
22. Böl, M.; Seydewitz, R.; Leichsenring, K.; Sewerin, F. A phenomenological model for the inelastic stress–strain response of a potato tuber. *J. Mech. Phys. Solids* **2020**, *137*, 103870. [CrossRef]
23. Hon, W.; Di, W.; Wen, L.; Shi, Z.; Xiao, Y. Development of 4UFD-1400 type potato combine harvester. *Trans. Chin. Soc. Agric. Eng.* **2019**, *29*, 11–19.
24. Shangpeng, D.; Bai, L.; Yao, Y.; Yue, B.; Fu, Z.; Zheng, Z.; Huang, Y. Discrete element modelling (DEM) of fertilizerdual-banding with adjustable rates. *Comput. Electron. Agric.* **2018**, *152*, 32–39.
25. Wang, Y.; Zhang, Y.; Yang, Y. Discrete element modelling of citrus fruit stalks and its verification. *Biosyst. Eng.* **2020**, *200*, 400–414. [CrossRef]
26. Ge, Y.; Liang, Q.; Wang, G. *Experimental Design Method and Application of Design-Expert Software*; Harbin Institute of Technology Press: Harbin, China, 2015; pp. 137–148.
27. Li, Y.; Hu, C. *Test Design and Data Processing*; Chemical Industry Press: Beijing, China, 2017; pp. 188–193.