applied sciences

MDPI

Article

Digital Product Passport Implementation Based on Multi-Blockchain Approach with Decentralized Identifier Provider

Mihai Hulea *, Radu Miron and Vlad Muresan

Automation Department, Faculty of Automation and Computer Science, Technical University of Cluj-Napoca, Memoradumului No. 28, 400114 Cluj-Napoca, Romania; radu.miron@aut.utcluj.ro (R.M.); vlad.muresan@aut.utcluj.ro (V.M.)

* Correspondence: mihai.hulea@aut.utcluj.ro

Abstract: This paper examines the implementation of a digital product passport (DPP) using Hyperledger Fabric technology to enhance product lifecycle management within the European Union's circular economy action plan. This study addresses the need for detailed product information on materials, origin, usage, and end-of-life instructions to improve recycling practices and promote sustainable consumption. The approach integrates decentralized identifier (DID) technology for unique product identification using the cheqd.io platform with an enterprise tailored Hyperledger Fabric blockchain network for DPP data management, leveraging their strengths to enhance security and efficiency. This paper details the data model for the DPP, including entities like Product, Manufacturer, Supplier, and Material. Performance tests on the Hyperledger Fabric network demonstrate the system's efficacy, focusing on CRUD operations and scalability. Future work will extend to the development of client applications and more comprehensive performance evaluations considering scalability and network expansion.

Keywords: blockchain; decentralized identifiers; digital product passport

check for updates

Citation: Hulea, M.; Miron, R.; Muresan, V. Digital Product Passport Implementation Based on Multi-Blockchain Approach with Decentralized Identifier Provider. *Appl. Sci.* **2024**, *14*, 4874. https://doi.org/10.3390/app14114874

Academic Editors: Andrew Yeh Ching Nee and Soh Khim Ong

Received: 16 May 2024
Revised: 3 June 2024
Accepted: 3 June 2024
Published: 4 June 2024

Copyright: © 2024 by the authors. Licensee MDPI, Basel, Switzerland. This article is an open access article distributed under the terms and conditions of the Creative Commons Attribution (CC BY) license (https://creativecommons.org/licenses/by/4.0/).

1. Introduction

In response to the need for sustainable and resilient industrial practices, the EU has prioritized transitioning to a circular green economy. The EU aims to double its circular material use rate from 11.5% in 2022 to 23.4% by 2030 [1,2]. Achieving this requires adopting a circular economy R-strategies framework [3], which is classified under three approaches:

- Smarter product use and manufacture: R0—Refuse: make a product redundant by abandoning its function or by offering the same product function with a radical different product, R1—Rethink: make a product's use more intensive, R2—Reduce: increase efficiency in product manufacture, and R3—Reuse: the reuse by another consumer of a discarded product which is still in good condition;
- Life extension strategies: R4—Repair: the repair and maintenance of a defective product, R5—Refurbish: restore an old product and bring it up to date, R6—Remanufacture: use parts of a discarded product in a new product with the same function, and R7—Repurpose: use a discarded product or its parts in a new product with a different function;
- Creative material application: R8—Recycle: process material to obtain the same or lower quality and R9—Recover: the incineration of materials with energy recovery.

Digitalization, along with appropriate skills and knowledge for end-users, is crucial for realizing the full potential of the circular economy. Adopting human-centered digital frameworks powered by state-of-the-art technologies will facilitate the adoption of circular economy strategies. These technologies include federated data spaces, distributed ledger technologies (DLTs), artificial intelligence (AI), digital product passports, advanced digital

models, and end-to-end lifecycle assessment (LCA) [4]. Combining these innovative technologies in a data-driven approach will enhance product traceability, simulate lifecycles, facilitate R-strategy adoption, and assess and predict environmental impacts.

A digital product passport (DPP) refers to a system that contains detailed information about a product's materials, origin, use, and end-of-life handling instructions. The concept is becoming increasingly significant in the context of the European Union's circular economy action plan [5]. These passports provide comprehensive digital records of products, including their material composition, production history, lifecycle events, and compliance with environmental and social standards. By capturing detailed information about each product, DPPs enable greater transparency and traceability, which are essential for ensuring the responsible production, usage, and disposal of products.

1.1. Motivation

Current emphasis within the academic research community is on the conceptual design and sector-specific content of DPPs, with less attention being directed towards the foundational technical IT infrastructure that supports these DPP systems. In this context, the present paper proposes a technology framework based on a multi-blockchain approach for implementing a DPP concept focusing on the data model required to store all information related to such assets. In addition, decentralized identifier (DID) technology [6] is used for managing the DPP's unique IDs.

A key aspect of implementing a DPP solution is the unique identification of products. This is crucial for ensuring the accurate tracking, verification, and management of product information across their entire lifecycle. DIDs offer a unique opportunity to enhance the identification process by providing a secure, decentralized method of identity verification and management. This integration could significantly improve the reliability and integrity of DPP systems, ensuring that product data remain consistent, tamper-proof, and accessible across various stages of the product's life [7]. In [8], the authors discuss the use of DIDs for creating product passports, focusing on their application in uniquely identifying products. As noted, DIDs offer several empowering properties compared to traditional identifiers like domain names or UUIDs. They are designed to be decentralized, cryptographically verifiable, persistent, and resolvable, making them ideal for identifying products and linking to their verifiable metadata.

1.2. Current Developments and Research in Digital Product Passports

In [9], the authors provide an overview of the current state of DPPs, emphasizing their emerging role in the circular economy. The paper scrutinizes 76 initiatives across corporate, policy, and research sectors, categorizing them into 13 distinct criteria to assess their development and impact. Central to their findings is the observation that while DPPs are pivotal to the EU's Green Deal and Twin Transition strategy, their practical application remains limited, and there is a lack of uniformity in technological and content approaches across different sectors.

The success of DPP implementation heavily relies on collaborative efforts among businesses, governments, and individuals, aiming to create an open and collaborative data ecosystem in Europe. Key initiatives contributing to this ecosystem include GAIA-X and the International Data Spaces Association (IDSA) [10]. GAIA-X, backed by the European Commission, is developing a federated data structure for the digital economy, focusing on data sovereignty, transparency, security, and interoperability. The IDSA, on the other hand, is facilitating secure and standardized data exchange, crucial for the DPP's lifecycle data management. Industry-specific solutions like Catena-X for the automotive sector and the Global Battery Alliance for sustainable battery value chains are also making significant advancements [11]. These initiatives are developing frameworks for DPPs in their respective industries, aiming to enhance traceability, sustainability, and efficiency.

One of the primary uses of DPPs is to enhance the traceability of products throughout their entire lifecycle. For instance, in the automotive industry, projects like Catena-X utilize

DPPs to create end-to-end data chains that track hardware and software components. This traceability helps in complying with supply chain laws, ensuring the sustainability of production processes and improving quality management through real-time data sharing. DPPs also support circular economy practices by documenting the CO_2 footprint and compliance with social standards, which aids in minimizing the environmental impact of automotive manufacturing.

In the electronics sector, the KEEP [12] initiative demonstrates how DPPs can be used to assign unique identifiers, such as barcodes or QR codes, to electronic products. These identifiers allow organizations and users to access and share information about a product's lifecycle, including production, distribution, purchase, repairs, and recycling. This system promotes sustainable production, increased reuse, and improved material recycling. It also provides consumers with independently verified data from certifications, facilitating the resale of products and providing estimated values, ultimately contributing to a reduction in electronic waste.

DPPs are also being explored in the construction industry to promote circularity and resource efficiency. Projects like Concular [13] in Germany and the development of digital material passports for buildings demonstrate how DPPs can support the construction sector in becoming more sustainable. These passports provide detailed information about the materials used in buildings, their origins, and their potential for reuse and recycling. By making this information readily available, DPPs help property owners, consultants, and contractors make informed decisions that support the circular economy, reduce waste, and lower CO_2 emissions.

The fashion and textile industry, known for its complex supply chains and significant environmental impact, can also benefit from DPP technology. DPPs can track the origin, production processes, and lifecycle of garments, ensuring transparency and accountability in the supply chain. This traceability helps brands comply with sustainability standards and certifications, enhancing consumer trust [14,15].

The pharmaceutical industry can leverage the effects of digital transformation [16] to improve the traceability and authenticity of medical products. By tracking the entire lifecycle of drugs, from raw material sourcing to manufacturing, distribution, and disposal, DPPs help combat counterfeiting and ensure compliance with regulatory standards.

Moreover, DPPs are instrumental in ensuring compliance with environmental and social standards across various value chains. For example, in the lifecycle analysis (LCA) of products, blockchain technology is used to ensure decentralized data storage and the traceability of products from raw material extraction to recycling. This approach guarantees that products meet social and ecological standards throughout their lifecycle, enabling greener product development and standardized LCA data.

1.3. Blockchain Technology Overview

Blockchain is the fundamental technology supporting the renowned cryptocurrency known as bitcoin. Proposed in 2008 by an individual or group using the pseudonym Satoshi Nakamoto in a whitepaper, bitcoin's implementation was launched shortly after on 3 January 2009, with the mining of its genesis block. Subsequently, the first bitcoin client was released six days later [17].

Blockchain could be described as a digital ledger technology that records transactions securely across multiple computers. It is decentralized, meaning no single entity controls the entire network. This technology ensures that once a transaction is recorded, it cannot be changed, making it highly secure and tamper-resistant.

There are two main types of blockchains: public and private. Key differences between public and private blockchains include accessibility, transparency, control, performance, and privacy. Public blockchains (such as bitcoin or Ethereum) are open to anyone, providing full transparency and decentralization, but they often face performance issues. Private blockchains (such as Hyperledger Fabric or Corda), on the other hand, are restricted to

specific participants, offering limited transparency but better efficiency and privacy due to controlled access and faster transaction processing.

To operate in a trustless, decentralized environment, blockchains rely on essential technologies like distributed consensus mechanisms, digital signatures, and cryptography [18]. This innovation marked a significant stride in blockchain technology, notably with the introduction of smart contracts, often dubbed as Blockchain 2.0. While Blockchain 1.0 was primarily tailored for digital currencies, the advent of smart contracts substantially broadened the scope of real-life sectors benefiting from this technology. Its applications expanded beyond the realm of digital finance to include fields such as logistics, supply chain monitoring, IoT, healthcare, personal identity management systems, music royalties processing, anti-money laundering, voting, agriculture, and more [19,20].

According to [21], Blockchain 3.0 accentuates the decentralized nature of blockchains, particularly emphasizing functions like transparency. Moving forward to Blockchain 4.0, the focus is on showcasing real-world applications and the impactful utilization of blockchains across various industries. In Blockchain 5.0, the technology evolves further by integrating with artificial intelligence, alongside other data analytics and Industry 4.0 technologies. This integration results in the deployment of intelligent and automated operations supported by blockchains in this advanced phase, facilitating smart functionalities.

Decentralized architectures offer several advantages over centralized ones, including enhanced security through the absence of a single point of failure, greater transparency as all participants access the same real-time data, and improved reliability since the system remains operational even if some nodes fail. Additionally, decentralized networks are more scalable by adding nodes to distribute the computational load and ensure data integrity, as transactions are cryptographically secured and immutable. These benefits make decentralized systems particularly effective for applications like digital product passports, which require high security, transparency, reliability, and scalability.

The concept of the digital product passport is tied to the domain of supply chain management. The literature examines the application of blockchains in controlling and managing supply chains. According to [22,23], the expansion of supply chains on a global scale presents management challenges. The blockchain functions as a distributed digital ledger ensuring transparency, traceability, and security and holds potential for mitigating certain complexities in global supply chain management. The paper analyzes the application of blockchain technology and smart contracts in addressing challenges within supply chain management. It also points out some barriers that blockchain adoption in the supply chain may face.

The blockchain's distributed architecture enables it to alleviate risks within supply chains linked to piracy, hacking, vulnerabilities, costly compliance with government regulations, and contractual disputes. By eliminating the need for third-party involvement, transactions become considerably quicker and more cost-effective. This fosters visibility throughout the entire supply chain and facilitates improved connectivity among all stakeholders by integrating the physical and digital realms.

In relation to the use of blockchains for supply chains, [24] highlights certain drawbacks. Blockchain technology serves as a tool to facilitate secure and publicly viewable transactions. Yet, owing to the irreversible nature of blockchain transactions, recipients are unable to obtain refunds unless a new transaction is executed. Moreover, the ambiguity in laws and regulations governing the blockchain environment can potentially confuse stakeholders. Lastly, contrary to popular belief, blockchains are not as cost-effective as perceived. The substantial operational and implementation expenses associated with blockchain systems are not negligible.

2. Materials and Methods

2.1. Solution Architecture Overview

The proposed solution is based on a multi-blockchain architecture, where two distinct blockchain technologies are combined. The DID Management Blockchain (DID-MB) is

dedicated to the management of DIDs and is implemented on top of the Cheqd [25] blockchain platform which is designed to provide decentralized identity solutions. The DPP Data Blockchain (DPP-DB) focuses on handling data models associated with DPPs and is implemented on top of the Hyperledger Fabric blockchain platform [26] designed from the start for enterprise use cases. This dual-blockchain approach leverages the unique strengths of each system to create a more comprehensive and efficient solution for product lifecycle management. The service gateway acts as a middleware (an intermediary layer) that connects applications and services to the underlying blockchain networks. The middleware can provide additional services such as data validation, synchronization, and conflict resolution. The middleware acts as security manager and ensures that the interaction with the two blockchains is efficient and secure.

The process of creating a DPP involves using decentralized identifiers to create a unique ID for the product stored in a verifiable data registry, which then is linked to the product passport. This is achieved using a DID resolver, in this case, provided by cheqd.io, offering similar functionalities to a standard Global Trade Item Number (GTIN) but with additional advantages like decentralization and cryptographic verification. Each DID ID is accompanied by a DID document that includes metadata.

Figure 1 presents the block diagram of the proposed solution.

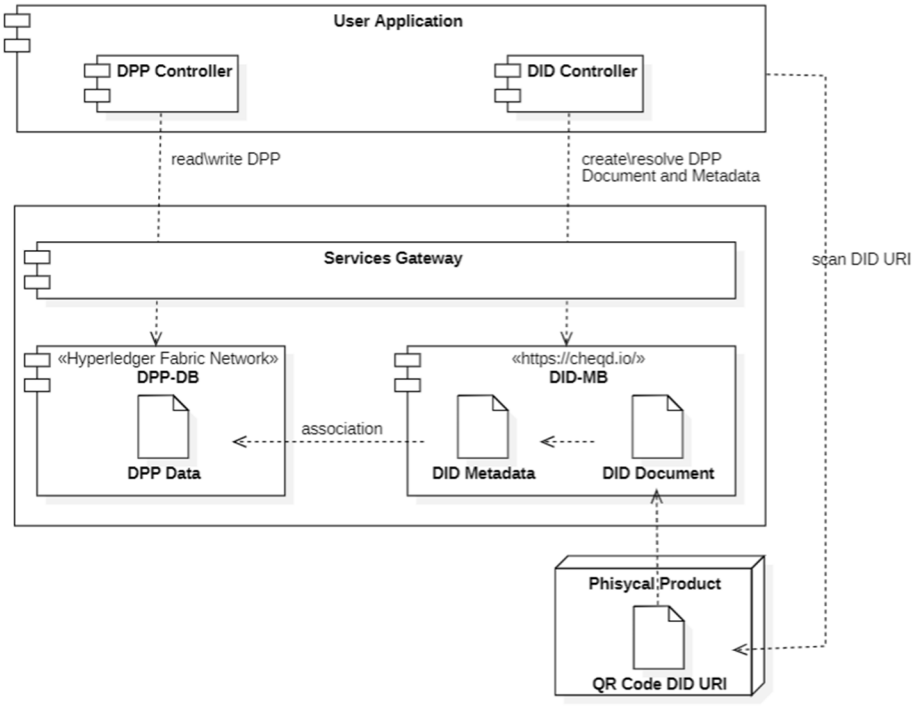

Figure 1. Solution proposal block diagram.

The User Application integrates the required components (controllers) to interact with multi-blockchain infrastructure. In a simplified scenario, the following use cases are covered by this application: (1) create a DPP for a new product which includes a DID document and an associated DPP document and (2) lookup and interact with the DPP document based on the product DID identifier. The interaction for creating a new DPP entry is presented in Figure 2a, while interactions for accessing an existing DPP entry based on a unique ID is presented in Figure 2b.

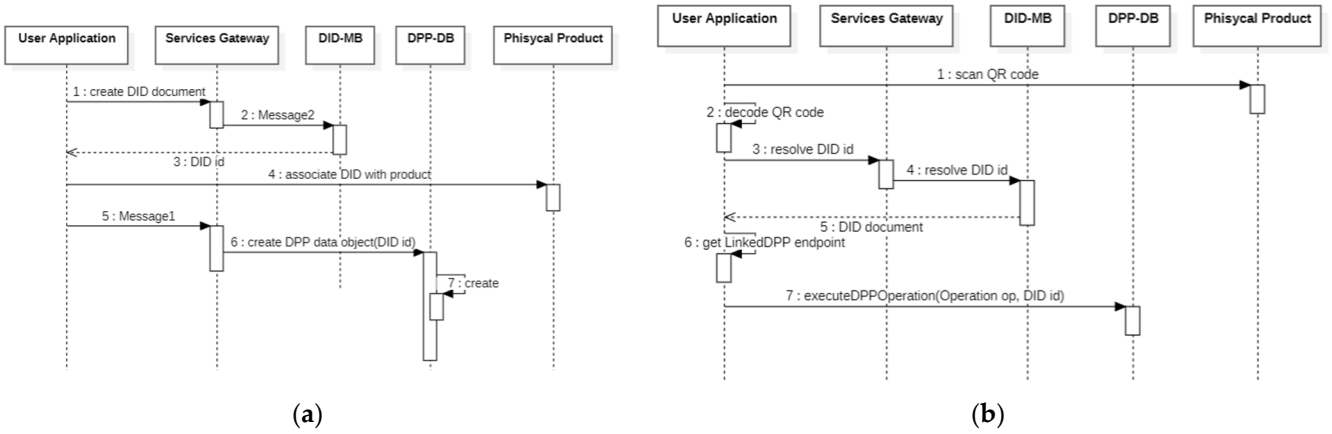

Figure 2. (**a**) Create DPP object flow. (**b**) Lookup existing DPP flow.

By segregating DIDs and DPPs across different blockchains, the system enhances overall security. Each blockchain can be optimized for its specific purpose, reducing the risk of compromising both identifiers and product data in the event of a security breach. This approach allows each blockchain to scale according to its unique requirements. The DID blockchain can focus on efficiently managing identity verifications, while the DPP blockchain can be optimized for handling complex product lifecycle data. This flexibility allows for different consensus mechanisms, data structures, and privacy settings suitable for DIDs and DPPs.

2.2. Interaction with DID-MB Blockchain

Creating a DPP record for a physical product involves creating a DID document in the DID-MB blockchain and then creating and associating a passport data object in DPP-DB. The association between the two documents is conducted through DID ID.

For the User Application to be effective in discovering a digital product passport and to interact with it, the associated DID document must contain a specific service endpoint with an identifier (e.g., "#dpp-gateway"), a service type "LinkedDpp", and an endpoint URL that directs to the digital product passport DPP-DB service gateway.

To demonstrate the concept, using cheqd.io services, a DID document has been created in the testnet network resulting in a document with ID did:cheqd:testnet:a515028c-64cc-47db-8fc2-e79d70713b42. This ID represents a unique product identifier, and it is used by the DPP-DB blockchain as the primary key for the DPP document associated with this product. Also, this ID is used to generate bar code or QR code which is to be associated with the product. For the User Application to interact with the DPP document, first it must lookup the DID document using the DID resolver based on the ID which was decoded from QR code, and then it must identify the service https://aut.utcluj.ro/dppgateway (accessed on 20 May 2024) where the service gateway is deployed. Effective interaction (reading and updating DPP data object attributes) happens at the DPP-DB level and is intermediated by the service gateway. The created DID document can be accessed on Cheqd test network https://resolver.cheqd.net/1.0/identifiers/did:cheqd:testnet:a515028c-64cc-47db-8fc2-e79d70713b42 (accessed on 20 May 2024):

{
"did": "did:cheqd:testnet:a515028c-64cc-47db-8fc2-e79d70713b42",
"controllerKeyId":
"e0d9a07e2c4e9d701fbfa414e0c545ccedd5b714b9af670039e338c8b71f7bda",
"keys": [{
"kid": "e0d9a07e2c4e9d701fbfa414e0c545ccedd5b714b9af670039e338c8b71f7bda",
"kms": "postgres", "type": "Ed25519",
"publicKeyHex":
"e0d9a07e2c4e9d701fbfa414e0c545ccedd5b714b9af670039e338c8b71f7bda",

```
      "meta": {
       "algorithms": [
         "EdDSA", "Ed25519"
       ] } } ],
    "services": [
      {
       "id": "did:cheqd:testnet:a515028c-64cc-47db-8fc2-e79d70713b42#dpp-gateway",
       "type": "LinkedDpp",
       "serviceEndpoint": [
          "https://aut.utcluj.ro/dppgateway (accessed on 2 June 2024)"
       ]],
    "provider": "did:cheqd:testnet"
}
```


2.3. Digital Product Passport Data Model

The UML class diagram depicted in Figure 3 illustrates the data model employed within the DPP blockchain. This visual representation outlines the data type and the relationships essential to the functioning of the system.

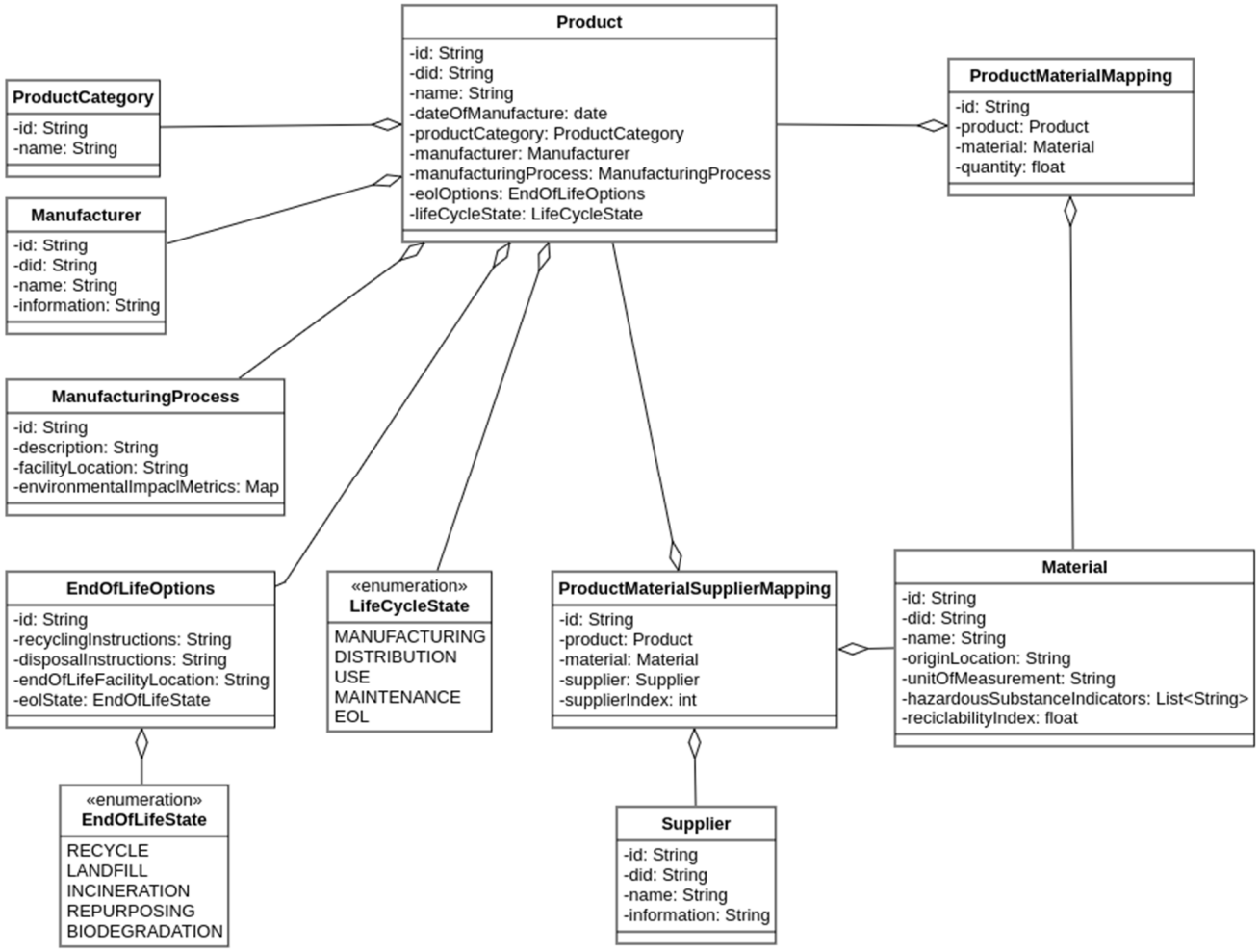

Figure 3. The DPP blockchain data model.

The proposed data model comprises key entities, namely *Product*, *Manufacturer*, *Supplier*, and *Material*, each possessing a *did* attribute for linkage with the DID blockchain.

In addition to the basic attributes such as *id*, *did*, *name*, and *date of manufacture*, the *Product* entity includes further details: *product category*, *manufacturer*, *manufacturing process*, *end-of-life options*, and *lifecycle state*.

The *Manufacturer* entity records both the name and supplementary information regarding all manufacturers of the products.

Similarly structured, the *Supplier* data type mirrors the *Manufacturer* entity.

Materials utilized in product manufacturing are represented by the *Material* entity. Its attributes encompass material *name*, *origin* (location), *unit of measurement*, a roster of *hazardous substance indicators*, and *recyclability index*.

Additionally, the data model incorporates the *ProductMaterialMapping* and *ProductMaterialSupplierMapping* data types. *ProductMaterialMapping* is dedicated to preserving the composition materials of a product, while *ProductMaterialSupplierMapping* specifically identifies both the composition materials and their respective suppliers. Furthermore, *ProductMaterialSupplierMapping* includes the *supplier index* within the supply chain.

2.4. Chaincode Implementation Details

To implement the proposed proof of concept, the Hyperledger Fabric blockchain was chosen. The main features and advantages of Hyperledger Fabric are as follows: a modular architecture—pluggable components, pluggable consensus mechanism (crash fault tolerance (CFT) or Byzantine fault tolerance (BFT)), permissioned network—only authorized participants can join the network, scalability and performance, private transactions, channel-based communication—enables private and confidential communication between subsets of network participants, identity management, and enterprise-focused features—addressing concerns related to compliance, regulatory requirements, and auditability. These advantages make Hyperledger Fabric a preferred choice for enterprises and consortiums looking to deploy permissioned blockchain networks, especially in sectors requiring privacy, scalability, and customizability, such as supply chain management, finance, healthcare, and more [27].

In Hyperledger Fabric, chaincode functions equivalent to a smart contract found in other blockchain platforms. It defines the rules and logic-governing transactions within the network. Chaincode can be scripted in Go, Node.js, or Java, and it is a program that implements a predefined interface (API), provided by the *fabric-contract-api* library. Another important library for implementing and deploying chaincode is *fabric-shim.* It contains the implementation necessary for facilitating communication with Hyperledger Fabric peers for smart contracts created by using *fabric-contract-api*.

The proposed DPP blockchain chaincode was implemented in Node.js. The chaincode structuring is presented in the module dependency diagram (see Figure 4).

The implementation of business logic within the chaincode was divided into several modules. Most of the modules contain the implementation of the available operations for one of the entities proposed by the data model (e.g., *productContract.js* for *Product*, *manufacturerContract.js* for *Manufacturer*, *supplierContract.js* for *Supplier*, etc.). These are called domain logic modules.

The *chaincodeUtils.js* module is used by the domain logic modules as it provides generic implementation for the following operations: *create*, *read*, *update*, *delete*, *getAll*, *saveAll*, *exists*, and *getBySelector*—for running complex queries.

The entire business logic is exposed to the outside world through the facade module *chainCode.js.* All the public operations that are implemented by the domain logic modules are aggregated by this module. The actual implementation of this code unit is a class that extends the *Contract* class from the *fabric-contract-api* library.

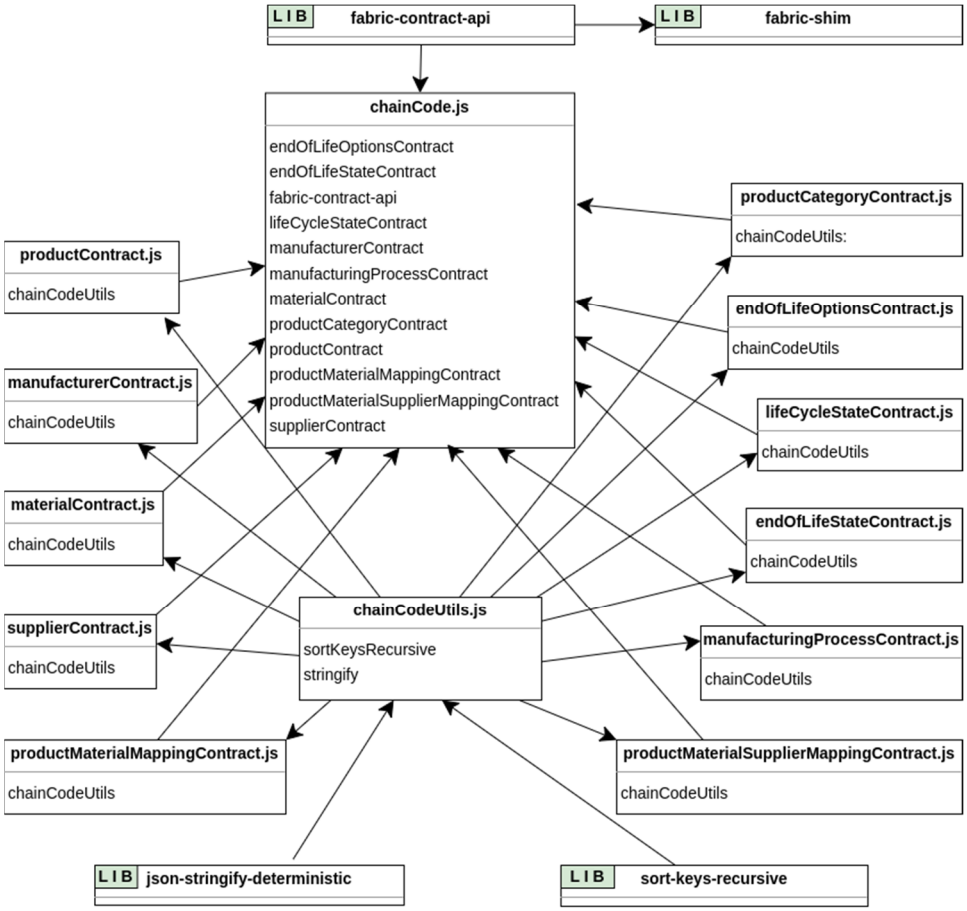

Figure 4. The chaincode module dependency diagram.

3. Results

3.1. DPP Test Network

To implement the proposed data model, a Fabric test network was deployed. The blockchain runs the smart contract described in Section 2.4 The components of the test network are presented in Figure 5.

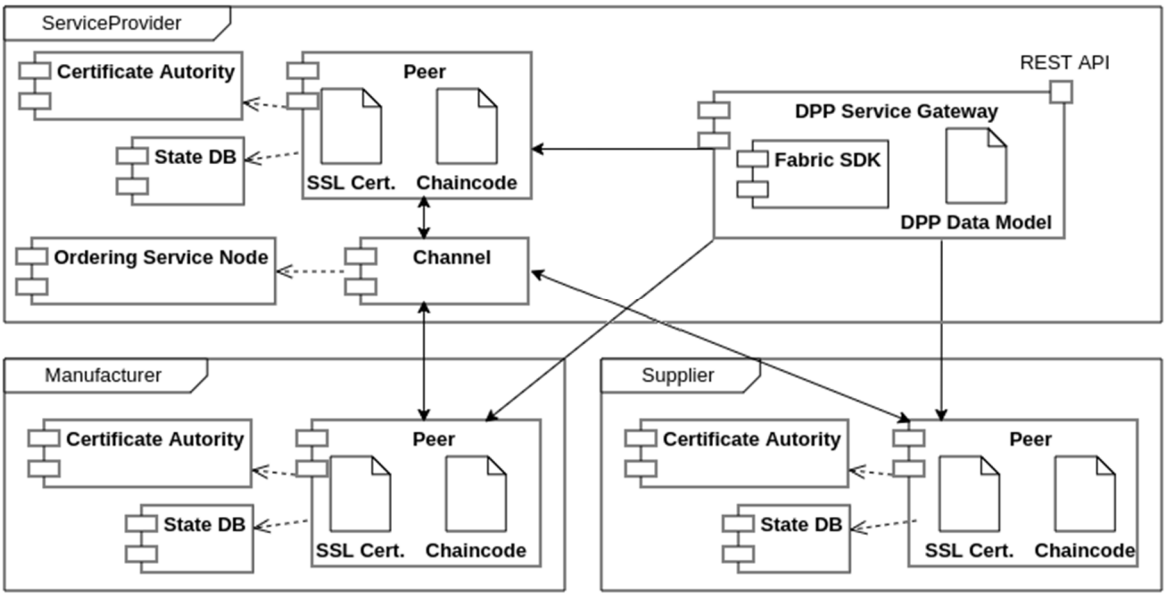

Figure 5. The DPP blockchain test network.

The test network comprises three distinct organizations, namely *Service Provider*, *Manufacturer*, and *Supplier*. Each organization is equipped with a singular peer, a state database, and a certificate authority (CA). The Service Provider organization is responsible for the management of the proposed system. It is also responsible for deploying the *ordering service* and for managing the *channel*. The same organization runs the DPP service gateway. Ensuring uniformity, each peer has an identical version of the installed chaincode. Communication among clients, peers, and the ordering service occurs through RPC utilizing SSL/TLS certificates provided by the certificate authority.

To execute a transaction like creating a *Product* asset, the peer runs the smart contract (chaincode). After validation, the transaction is sent to the ordering service, typically a single node. Multiple transactions can be sent to different peers simultaneously. The ordering service organizes transactions into blocks based on the network's consensus protocol, then distributes them to all peers. Each peer validates the block, storing data in their state databases. The communication takes place through a *channel*. This is a private communication pathway (a subnet) that enables secure and confidential interaction between specific network members. It restricts access to transactions, ensuring that only authorized participants can view and engage with the data exchanged within the channel. This mechanism allows organizations to conduct sensitive transactions without exposing them to all participants in the broader network.

The *state database* serves as a key–value store for tracking the ongoing status of the ledger, housing the current values of all ledger assets and the live state of any deployed smart contracts on the platform. Fabric supports two peer state database options. The default state database embedded in the peer node is LevelDB. This database option stores the data as basic key–value pairs and supports key, key range, and composite key queries. Alternatively, CouchDB serves as an optional configurable state database, enabling data modeling on the ledger as JSON and facilitating rich queries against data values rather than retrieving data just by keys. With CouchDB, indexes can be deployed inside the chaincode package to enhance query efficiency and enable the fast querying of large datasets [27].

Accessing the peers directly from the client application is restricted. Instead, the blockchain interacts with the external environment through a Java (Spring Boot) REST API (i.e., DPP service gateway). The integration of the Java application with the ledger network was accomplished using the Fabric SDK [28].

3.2. Performance Results

Performance tests were executed on the suggested implementation, utilizing the Fabric default test network featuring CouchDB as the state database. The DPP blockchain nodes and the DPP REST API application were both deployed on a single machine equipped with an Intel® Core™ i7-8565U CPU @ 1.80 GHz × 8, 16 GB RAM (equipment source: Asus, Cluj-Napoca, Romania), running Ubuntu 22.04.3 LTS. Apache JMeter 5.6.2 served as the tool for conducting these tests.

The average response times (for 100 requests, 1 thread) for the primary operations supported by each entity within the data model (such as Manufacturer, Supplier, Product, etc.) are displayed in Table 1.

Table 1. The temporal performances of the main operations.

Pre-existent Number of Records	Get Record by DID—No Index [ms]	Get Record by ID [ms]	Update Record [ms]	Delete Record [ms]
1000	35	4	2052	2021
5000	138	4	2072	2152
10,000	298	4	2067	2073
50,000	1394	4	2082	2065
100,000	2752	4	2076	2084
1,000,000	26,325	4	2125	2091

The findings indicate that the performance of basic CRUD operations remains unaffected by the quantity of existing blockchain records. Swift retrieval by ID is facilitated by the implicit indexing of assets. Create, update, and delete operations consistently consume approximately 2 s each due to necessary blockchain state modifications, involving communication and validation processes. Conversely, retrieving an asset by a different attribute (e.g., DID) experiences significant slowdown, correlating with the dataset's magnitude.

The initial tests were performed without any additional indexes added to the state database. Finding an asset by DID can be conducted with a regular CouchDB selector, e.g.,

{"selector": {"docType":"product","did":"4d40e672-1b4f-436b-93c9cabffbb90e27"}}

docType serves as a custom attribute integrated into all records, aiding in their categorization by entity types, given the absence of SQL table concepts in CouchDB. Consequently, the index generated for 'get record by DID' encompasses both the DID and docType attributes. Following the index addition, the average response time consistently remained at 10 ms, irrespective of the quantity of records ([1000, 1,000,000]) stored in the database.

The integration of the CouchDB index into the chaincode involves the placement of a JSON file within the chaincode's primary directory at the specified path: META-INF/statedb/couchdb/indexes. The content of the added index is presented below:

```
{
    "index": {
        "fields": [
            "docType",
            "did"
        ]
    },
    "ddoc": "indexDidDoc",
    "name": "indexDID",
    "type": "json"
}
```

Following the index's incorporation, load tests were conducted on a blockchain preloaded with 1,000,000 mock data records. Figure 6 illustrates a chart displaying the average response time for 'get by ID' and 'get by DID' operations relative to the number of simultaneous requests. A sequence of 200 tests was conducted. In both scenarios, it was observed that a maximum threshold of approximately 250 concurrent requests was manageable; however, beyond 300 requests concurrently, some requests started encountering timeouts, accounting for approximately 4% of cases. With 400 parallel requests, the error rate rose to approximately 10%.

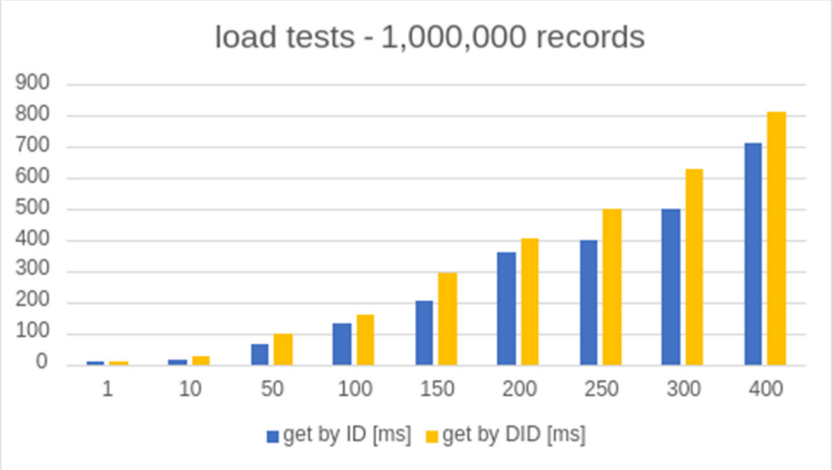

Figure 6. Average response time for 'get by ID' and 'get by DID' operations.

4. Discussion

This paper explored using Hyperledger Fabric blockchain technology to develop a digital product passport (DPP) to improve how products are managed from the start to finish of their lifecycle. We used a new type of product ID, called decentralized identifier (DID), to track products securely and accurately. The setup involved two blockchains: one for handling DIDs and the other for product information.

Practical implementation was focused on building the smart contract and data model associated with the DPP. The proposed data model includes details about the product, its maker, suppliers, and the materials used. When the system was tested on the Hyperledger Fabric test network, it proved to be effective and able to handle lots of parallel requests.

The performance analysis in this paper primarily focused on the response times of CRUD operations in a controlled test environment. While this provides valuable insights into the system's capabilities under specific conditions, it does not fully account for the scalability issues that may arise in a real-world scenario with a significantly larger number of nodes. Future performance evaluations should consider the following aspects: throughput (the rate at which transactions are processed by the network), consensus overhead (the additional time and resources required to reach consensus as the network grows), storage requirements (the increased storage needs for maintaining a copy of the entire blockchain ledger on each node), and network latency (increased communication delays between a larger number of nodes).

The present implementation solely encompasses the backend, as outlined in this paper's solution. Subsequent efforts will extend to the development of client applications, including a web application for DPP management and a mobile application enabling users to access DPPs through QR code scanning.

5. Conclusions

In summary, our research shows that blockchains can be a useful tool for managing product data in the context of a digital passport in a safe and transparent way. This is key for making products more eco-friendly and for meeting environmental regulations. The findings can serve as a basis for further studies and for applying this technology in various sectors.

The application of DPPs in sectors such as automotive, electronics, construction, fashion, food, and pharmaceuticals enhances traceability, compliance, and sustainability by providing detailed, transparent, and tamper-proof information throughout a product's lifecycle. This promotes responsible production and consumption practices, reduces environmental impact, and supports regulatory adherence across these industries.

Despite the numerous benefits of DPP technology, there are several challenges and limitations to consider. One major challenge is the integration of DPP systems with existing legacy systems and processes, which can be complex and resource-intensive. Another limitation is the scalability of the blockchain network. As the number of nodes increases, the system may face performance issues such as increased network latency and consensus overhead. Additionally, the initial setup and ongoing maintenance of a blockchain-based DPP system require significant investment in terms of time, money, and technical expertise.

The widespread adoption of DPPs requires strong collaboration among stakeholders, including manufacturers, suppliers, regulators, and consumers. Achieving this level of cooperation and aligning interests across diverse groups can be difficult. Despite these challenges, the potential benefits of DPPs in promoting sustainability and enhancing product lifecycle management make addressing these limitations worthwhile.

Author Contributions: Conceptualization, M.H.; formal analysis, V.M.; investigation, V.M.; methodology, M.H.; software, R.M.; validation, R.M.; writing—original draft, M.H. All authors have read and agreed to the published version of the manuscript.

Funding: This research received no external funding.

Institutional Review Board Statement: Not applicable.

Informed Consent Statement: Not applicable.

Data Availability Statement: The original contributions presented in the study are included in the article, further inquiries can be directed to the corresponding author.

Conflicts of Interest: The authors declare no conflicts of interest.

References

1. Circular Economy Action Plan—European Commission. Available online: https://environment.ec.europa.eu/strategy/circular-economy-action-plan_en (accessed on 15 May 2024).
2. Circular Economy—Material Flows. Available online: https://ec.europa.eu/eurostat/statistics-explained/index.php?title=Circular_economy_-_material_flows (accessed on 15 May 2024).
3. Erika, W.; Susanna, H.; Hannamaija, T.; Sonja, L.; Jaana, S.; Vesa, J.; Marjaana, K.; Patrycja, S.; Petrus, K.; Päivi, K.-R.; et al. *R-Strategies in Circular Economy: Textile, Battery, and Agri-Food Value Chains*; Natural Resources Institute Finland (Luke): Helsinki, Finland, 2023. Available online: https://jukuri.luke.fi/handle/10024/553461 (accessed on 15 May 2024).
4. Mitra Apurba, M.H. Life Cycle Assessment Guide—KPMG Global. KPMG. Available online: https://kpmg.com/xx/en/home/insights/2023/10/life-cycle-assessment-guide.html (accessed on 15 May 2024).
5. Digital Product Passport Powered by GS1 Standards. Available online: https://gs1.eu/wp-content/uploads/2024/05/GS1-in-Europe-DPP-Value-Proposition.pdf (accessed on 1 June 2024).
6. Decentralized Identifiers (DIDs) v1.0. Available online: https://www.w3.org/TR/did-core/ (accessed on 15 May 2024).
7. Dib, O.; Toumi, K. Decentralized Identity Systems: Architecture, Challenges, Solutions and Future Directions. *Ann. Emerg. Technol. Comput. (AETiC)* **2020**, *4*, 19–40. [CrossRef]
8. Jansen, M.; Meisen, T.; Plociennik, C.; Berg, H.; Pomp, A.; Windholz, W. Stop Guessing in the Dark: Identified Requirements for Digital Product Passport Systems. *Systems* **2023**, *11*, 123. [CrossRef]
9. Jansen, M.; Gerstenberger, B.; Bitter-Krahe, J.; Berg, H.; Sebestyén, J.; Schneider, J. *Current Approaches to the Digital Product Passport for a Circular Economy—An Overview of Projects and Initiatives*; Wuppertal Institut für Klima, Umwelt, Energie gGmbH: Wuppertal, Germany, 2022.
10. Braud, A.; Fromentoux, G.; Radier, B.; Le Grand, O. The Road to European Digital Sovereignty with Gaia-X and IDSA. *IEEE Netw.* **2021**, *35*, 4–5. [CrossRef]
11. Mügge, J.; Grosse Erdmann, J.; Riedelsheimer, T.; Manoury, M.M.; Smolka, S.O.; Wichmann, S.; Lindow, K. Empowering End-of-Life Vehicle Decision Making with Cross-Company Data Exchange and Data Sovereignty via Catena-X. *Sustainability* **2023**, *15*, 7187. [CrossRef]
12. KEEP Innovation Project. Available online: https://keepelectronics.com/#/product/PF0H268N (accessed on 15 May 2024).
13. Honic, M.; Magalhães, P.M.; Van den Bosch, P. From Data Templates to Material Passports and Digital Product Passports. In *A Circular Built Environment in the Digital Age*; De Wolf, C., Çetin, S., Bocken, N.M.P., Eds.; Springer International Publishing: Cham, Switzerland, 2024; pp. 79–94. [CrossRef]
14. Alves, L.; Sá, M.; Cruz, E.F.; Alves, T.; Alves, M.; Oliveira, J.; Santos, M.; Rosado da Cruz, A.M. A Traceability Platform for Monitoring Environmental and Social Sustainability in the Textile and Clothing Value Chain: Towards a Digital Passport for Textiles and Clothing. *Sustainability* **2024**, *16*, 82. [CrossRef]
15. Understanding the EU's Digital Product Passport and How It Impacts Fashion Brands. Available online: https://www.carbonfact.com/blog/policy/eu-digital-product-passport (accessed on 31 May 2024).
16. Ma, J.-Y.; Shi, L.; Kang, T.-W. The Effect of Digital Transformation on the Pharmaceutical Sustainable Supply Chain Performance: The Mediating Role of Information Sharing and Traceability Using Structural Equation Modeling. *Sustainability* **2023**, *15*, 649. [CrossRef]
17. Zheng, Z.; Xie, S.; Dai, H.N.; Chen, X.; Wang, H. Blockchain challenges and opportunities: A survey. *Int. J. Web Grid Serv.* **2018**, *14*, 354–355. [CrossRef]
18. Manski, S. Building the blockchain world: Technological commonwealth or just more of the same? *Strateg. Chang.* **2017**, *26*, 511–522. [CrossRef]
19. Christidis, K.; Devetsikiotis, M. Blockchains and Smart Contracts for the Internet of Things. *IEEE Access* **2016**, *4*, 2292–2303. [CrossRef]
20. Migliorini, S.; Gambini, M.; Combi, C.; La Rosa, M. The Rise of Enforceable Business Processes from the Hashes of Blockchain-Based Smart Contracts. In *Enterprise, Business-Process and Information Systems Modeling*; Lecture Notes in Business Information Processing; Springer: Cham, Switzerland, 2019; pp. 130–138. [CrossRef]
21. Choi, T.-M.; Siqin, T. Blockchain in logistics and production from Blockchain 1.0 to Blockchain 5.0: An intra-inter-organizational framework. *Transp. Res. Part E Logist. Transp. Rev.* **2022**, *160*, 102653. Available online: https://ideas.repec.org//a/eee/transe/v160y2022ics1366554522000497.html (accessed on 16 May 2024). [CrossRef]
22. Min, H. Blockchain technology for enhancing supply chain resilience. *Bus. Horiz.* **2019**, *62*, 35–45. [CrossRef]
23. Saberi, S.; Kouhizadeh, M.; Sarkis, J.; Shen, L. Blockchain technology and its relationships to sustainable supply chain management. *Int. J. Prod. Res.* **2019**, *57*, 2117–2135. [CrossRef]

24. Dutta, P.; Choi, T.-M.; Somani, S.; Butala, R. Blockchain technology in supply chain operations: Applications, challenges and research opportunities. *Transp. Res. E Logist. Transp. Rev.* **2020**, *142*, 102067. [CrossRef] [PubMed]
25. Create DIDs and Identity Keys | Product Docs. Available online: https://docs.cheqd.io/identity/credential-service/dids (accessed on 30 May 2024).
26. Hyperledger Fabric Docs—Introduction. Available online: https://hyperledger-fabric.readthedocs.io/en/latest/whatis.html (accessed on 22 February 2024).
27. Hyperledger Fabric Docs—Using CouchDB. Available online: https://hyperledger-fabric.readthedocs.io/en/latest/couchdb_tutorial.html (accessed on 22 February 2024).
28. Hyperledger Fabric Gateway SDK for Java. Available online: https://hyperledger.github.io/fabric-gateway-java/ (accessed on 22 February 2024).

Disclaimer/Publisher's Note: The statements, opinions and data contained in all publications are solely those of the individual author(s) and contributor(s) and not of MDPI and/or the editor(s). MDPI and/or the editor(s) disclaim responsibility for any injury to people or property resulting from any ideas, methods, instructions or products referred to in the content.