applied sciences

MDPI

Article

Engineering Properties and Economic Feasibility Evaluation of Eco-Friendly Rainwater Detention System with Red Clay Water-Permeable Block Body

Hojin Kim [1], Heeyong Choi [2], Taegyu Lee [3,*] and Hyeonggil Choi [4,*]

[1] Daegu Gyeongbuk Center, Korea Testing & Research Institute, 71-18 Geomdan-ro, Bukgu, Daegu 41516, Korea; white002@ktr.or.kr
[2] Claymax Co., Ltd., 454 Songhak-ro, Jecheon-si 27136, Korea; heeyong21@naver.com
[3] Department of Fire and Disaster Prevention, Semyung University, 65 Semyung-ro, Jecheon-si 27136, Korea
[4] School of Architecture, Civil Environment and Energy Engineering, Kyungpook National University, 80 Daehakro, Bukgu, Daegu 41566, Korea
* Correspondence: ltg777@semyung.ac.kr (T.L.); hgchoi@knu.ac.kr (H.C.); Tel.: +82-43-649-1315 (T.L.); +82-53-950-5596 (H.C.)

Abstract: An integrated rainwater management system is necessary due to the frequent occurrence of localized torrential rainfall and heat waves caused by an abnormal climate. It is necessary to develop a rainwater detention system that can implement rainwater infiltration and detention simultaneously. In this study, the safety, durability, and eco-friendliness of an eco-friendly rainwater detention system developed using an eco-friendly inorganic binder, which involves red clay, were evaluated and its economic feasibility was compared with that of the existing detention system. After 14 days, analysis of the maximum compression load and computational finite element analysis confirmed that the strength standard was satisfied and the structure was safe. No heavy metals or organic compounds were detected in the leaching test. Thus, the eco-friendly rainwater detention system is structurally safe and eco-friendly with no impact on the soil and groundwater environment, and is economically feasible because the construction cost and life cycle cost are approximately 30% and 58% lower, respectively, than those of the existing polyethylene infiltration detention tank system. These results indicate that improved safety, eco-friendliness, and economic feasibility can be achieved, compared to those of the existing system, if the eco-friendly rainwater detention system is applied in the field.

Keywords: rainwater detention system; red clay; engineering property; economic feasibility

check for updates

Citation: Kim, H.; Choi, H.; Lee, T.; Choi, H. Engineering Properties and Economic Feasibility Evaluation of Eco-Friendly Rainwater Detention System with Red Clay Water-Permeable Block Body. *Appl. Sci.* **2022**, *12*, 1193. https://doi.org/10.3390/app12031193

Academic Editor: Seong-Cheol Lee

Received: 21 December 2021
Accepted: 18 January 2022
Published: 24 January 2022

1. Introduction

In recent years, the carbon neutrality movement has been actively implemented worldwide to reduce carbon dioxide (CO_2) emissions, which constitute the primary cause of global warming [1]. In South Korea, considerable efforts have been made for greenhouse gas (GHG) reduction, such as increasing the 2030 Nationally Determined Contribution (NDC) to 30% [2,3]. GHG reduction is part of the response to climate change; nevertheless, the impact and damage of climate change caused by GHG emissions in the past are expected to last for the next 50–200 years [4]. In particular, the construction industry, which accounts for approximately 40% of all CO_2 gas emissions, is closely related to climate change, such as global warming [5]. Therefore, GHG reduction is expected to become a crucial issue for the construction industry in the future [6–10].

Despite global efforts to reduce CO_2 emissions, abnormal climate events, such as the sea level rise, heat waves, and heavy snow, have occurred worldwide [11], including in Korea. Localized torrential rainfall frequently occurs each year, and it is difficult to maintain river water in urban areas with high impervious pavement rates. Additionally, the groundwater level decreases due to reductions in precipitation in the spring and autumn

and the shortening of the drought period caused by the gradual change into a subtropical climate [12]. Therefore, rainwater management systems that can deal with such extreme climate change patterns, including floods and droughts, are required.

Recently, integrated rainwater management measures, such as the use, infiltration, and detention of rainwater, were introduced in Korea. The primary focus was the installation of large-scale underground detention tanks, which can reduce rainwater runoff during floods. However, there were limitations in improving the overall water circulation in the tank, including infiltration and evapotranspiration. The limited installation locations and high maintenance cost were also limiting factors [13]. Therefore, it is necessary to develop a more economical and eco-friendly rainwater detention system that can prevent rainfall-induced floods by implementing both rainwater infiltration and detention and to ensure the groundwater level through rainwater infiltration in dry seasons.

As part of this development, research has been actively conducted on red clay as an eco-friendly material. Red clay has long been used in various areas in Korea. Earthen houses are representative examples of structures built using red clay. Moreover, red clay is an easily available material in Korea as it covers 35% of its land, which increases the usability of red clay [14]. Red clay has also been actively researched in fields, such as beauty, food, and horticulture. In the construction field, methods of using natural materials to replace cement have been studied [15–18]. For red clay, however, problems with its properties, such as insufficient strength and cracks caused by drying shrinkage, compared to cement, have been noted [19]. In addition, to improve the durability of red clay, it has been used as a building material after being exploited as a ceramic product through the firing process. This method, however, involves complex work processes and is expensive because the red clay structure must be melted and sintered by high heat (high-temperature firing at 1000 °C or higher). Moreover, the energy consumption and generation of toxic substances by the combustion of fuel to produce a high temperature cause environmental pollution [20]. To address this problem, non-firing technology to ensure a predetermined strength through ionic aggregation and pozzolanic reaction using eco-friendly inorganic binders has been developed [21].

This report presents data for the field application of a prefabricated rainwater detention system. This system provides increased durability by employing eco-friendly red clay water-permeable blocks created by applying non-firing technology to red clay and improves the infiltration performance by ensuring detention space. Evaluations of the safety of raw materials, which constitute the eco-friendly rainwater detention system, and the durability and eco-friendliness of the unit structure are presented. Furthermore, the economic feasibility of the system is compared with that of the existing detention system. Table 1 shows the difference between the existing system (polyethylene (PE) infiltration facility) and eco-friendly rainwater detention system.

Table 1. Comparison of eco-friendly rainwater detention system with PE infiltration facility.

Item	Eco-Friendly Rainwater Detention System	PE Infiltration Facility
Example of application		
Structural safety	Very high (2030 kN)	Medium (150–300 kN)
Main ingredients	Red clay water-permeable block	PE board
Applied space	Around the building, road, parking lot	Park, green area

2. Experimental Plan and Method

2.1. Experimental Plan

Table 2 presents the experimental plan of this study. The design strength was set based on the porous revetment blocks of SPS-KCIC0001-0703 (concrete revetment and retaining wall blocks) [22]. To ensure proper porosity and water permeability, the powder-to-aggregate ratio and water-to-powder ratio were set to 1:5 and 19%, respectively, by performing preliminary mixing experiments several times. To investigate the engineering properties of the material, the compressive strength (7, 14, and 28 days), flexural strength (7, 14, and 28 days), porosity, and permeability coefficient were measured. In addition, the compressive load test and computational finite element analysis were conducted to examine the durability of the unit structure of the eco-friendly rainwater detention system. The leaching test was conducted to examine eco-friendliness. Finally, the economic feasibility of the eco-friendly rainwater detention system was evaluated through a comparison with the existing PE infiltration detention tank.

Table 2. Experimental plan.

Item	Values
W/B (%)	19
Raw materials	- Compressive strength (7, 14, and 28 days) - Flexural strength (7, 14, and 28 days) - Porosity - Permeability coefficient
Unit structure *	- Compressive load - Finite element analysis - Leaching test
Eco-friendly rainwater detention system	- Economic feasibility evaluation

* Unit structure (1000 × 1000 × 1000) mm.

2.2. Materials Used

To test the properties of raw materials, specimens were created using an eco-friendly inorganic binder (Table 3. Main chemical components of the eco-friendly inorganic binder (powder) (%)) containing red clay with the components shown in Table 4. An aggregate with no dust, soil, organic impurities, or chloride (Table 5. Characteristics of the aggregate used.) was added to the binder, and non-firing technology was applied using clean water containing no oil, acid, alkali, or organic impurities.

Table 3. Main chemical components of the eco-friendly inorganic binder (powder) (%).

CaO	SiO_2	Al_2O_3	Fe_2O_3	MgO	Others
49.6	26.4	12.4	0.62	4.38	6.6

Table 4. Chemical components of red clay (%).

SiO_2	Al_2O_3	Fe_2O_3	CaO	MgO	K_2O	Na_2O	Ig.Loss
40.0	32.9	7.79	0.39	1.54	0.76	1.73	13.7

Table 5. Characteristics of the aggregate used.

Aggregate Type	Aggregate Size (mm)	Dry Density (g/cm^3)	Water Absorption (%)	Solid Volume Percentage (%)
Crushed stone	3–5	2.61	1.7	56

2.3. Experiment on Raw Materials

2.3.1. Strength

Specimens (dimensions: 100 × 100 × 80 mm) for measuring the compressive strength were fabricated in accordance with SPS-KCIC0001-0703 [22], and specimens (dimensions: 140 × 125 × 80 mm) for measuring the flexural strength were produced in accordance with KS F 4419 [23]. Measurements were performed at 7, 14, and 28 days of age.

2.3.2. Porosity

Specimens with dimensions of 80 × 80 × 200 mm were fabricated in a prismatic shape for measuring the porosity. Following the measurement of the volume of each specimen, we sealed its five sides, except for the top of the block. Water was poured into the block through the top, after which the volume of the water that was poured into the block was measured immediately. The porosity was calculated as the ratio of the volume of the poured water to that of the block (porosity (%) = water volume (cm^3)/block volume (cm^3) × 100). Figure 1 depicts the porosity measurement.

Figure 1. Measurement of porosity.

2.3.3. Permeability

The permeability was measured in accordance with KS F 4419 [23] to calculate the permeability coefficient. The prepared specimen, with dimensions of 200 × 200 × 60 mm, was placed in the permeability test equipment. The equipment was tightly blocked using a sealing material to enable water flow only through the specimen. The permeability coefficient was calculated using the equation in Table 6.

Table 6. Permeability coefficient calculation formula.

$K = \frac{d}{h} \times \frac{Q}{A \times 30\ \mathrm{s}}$
where
K: permeability coefficient (mm/s)
Q: amount of water drained (mm^3)
d: thickness of the block (mm)
h: water level difference (mm)
A: cross-sectional area of the block (mm^2)
30 s: measurement time (s)

2.4. Structure Experiment

2.4.1. Maximum Compressive Load of the Unit Structure

To examine the safety of the field application of the eco-friendly rainwater detention system, the unit structure was fabricated using red clay water-permeable blocks, and the maximum compressive load test was conducted. Figure 2 shows the algorithm of the maximum compressive load test.

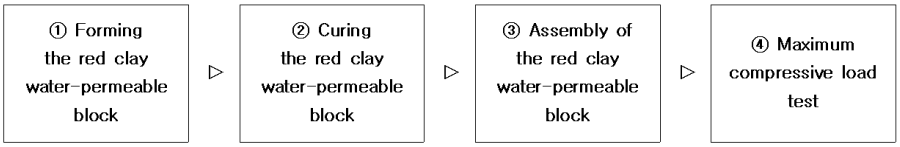

Figure 2. Algorithm of the maximum compressive load test.

The red clay water-permeable blocks, with widths, depths, and heights of 1000, 1000, and 200 mm, respectively, for the test were fabricated through high-pressure vibratory compaction and high-temperature steam curing that could ensure the strength required for a short period. The blocks were automatically fabricated using a mold and a vibratory compaction forming machine after mixing the raw materials. The fabricated blocks were cured up to an accumulated temperature of 700 (D.D) or higher under the temperature conditions of 20–65 °C. Figure 3 shows the unit structure forming and curing equipment.

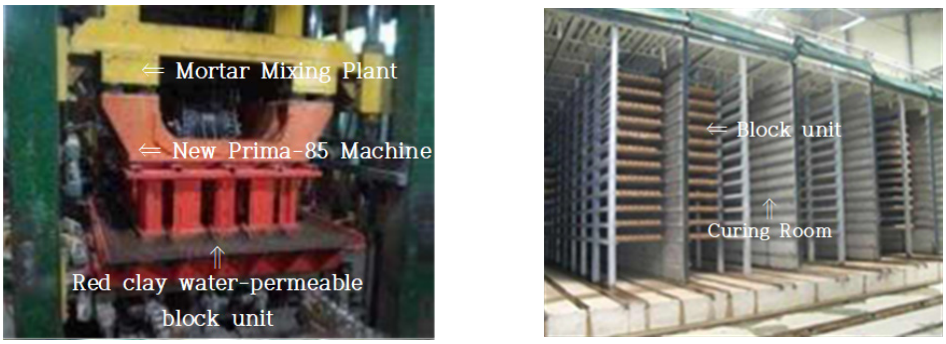

(**a**) Vibratory compaction forming machine (**b**) Curing equipment

Figure 3. Unit structure forming and curing equipment.

The unit structure (1000 × 1000 × 1000 mm) was fabricated by assembling five cured blocks. The maximum compressive load of the unit structure was measured using a universal testing machine. Figure 4 presents the red clay water-permeable block unit and the assembly of the unit structure.

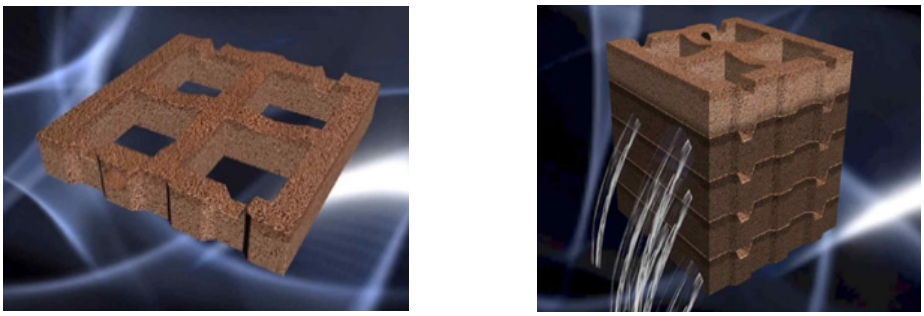

(**a**) Red clay water-permeable block unit (**b**) Assembly of the unit structure

Figure 4. Red clay water-permeable block unit and unit structure.

2.4.2. Computational Finite Element Analysis of the Unit Structure

To assess the structural safety of the unit structure, computational finite element analysis was conducted using ANSYS commercial finite element analysis software [24] in a static investigation by applying stationary load (self-weight, earth pressure, and overburden pressure) and vertical load conditions. Considering the experimental load, as shown in Table 7, the self-weight of the analysis model, earth pressure acting on the contact surface of the unit structure (depth: 2 m), vertical overburden pressure generated by the total weight of soil (1 m), and live load acting on the top of the ground (600 kN) were set

as the conditions of the static analysis (Figure 5). The physical properties of the applied experimental model are listed in Table 8. Figure 6 depicts the model of the unit structure, and Figure 7 shows a diagram of the unit structure.

Table 7. Analysis conditions.

Item	Values
Stationary load	Self-weight + earth pressure (depth: 2 m) + overburden pressure (1 m)
Vertical load	Live load (600 kN)

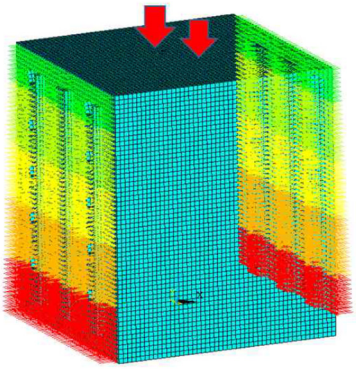

Figure 5. Test load conditions of the unit structure (Front and rear (earth pressure)/Top (overburden pressure 1 m + live load 600 kN)).

Table 8. Material properties.

Item	Texture	Elastic Modulus (MPa)	Poisson's Ratio	Density (kg/m^3)	Maximum Strength (MPa)
Unit structure	Permeable concrete	25,000	0.167	2400	29.0 (compressive strength) 7.3 (flexural strength)

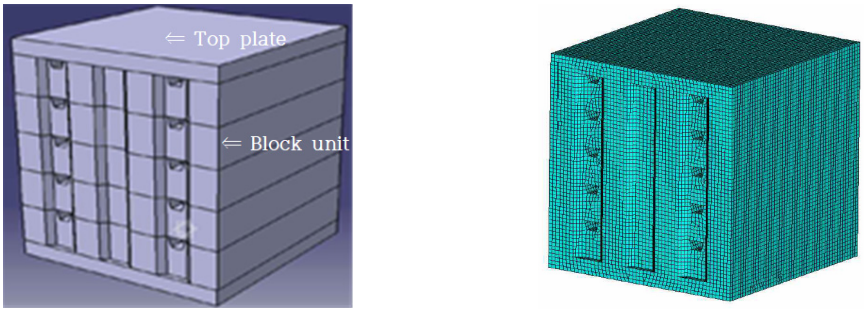

(**a**) Model (**b**) Mesh model

Figure 6. Model of the unit structure.

2.4.3. Leaching Test of the Unit Structure

Because the eco-friendly rainwater detention system is installed by embedding it in soil, it was necessary to identify its impact on the environment. Therefore, the amounts of cadmium, lead, hexavalent chromium, arsenic, and benzene were measured in accordance with the JIS K 0102 [25] test method using the red clay water-permeable block unit specimen. In addition, the amounts of organic phosphorus, total mercury, and polychlorinated biphenyl (PCB; chlorine compound) were measured in accordance with the S49 test method announced by the Ministry of the Environment. Moreover, the pH was measured by implementing the pH meter measurement method [26].

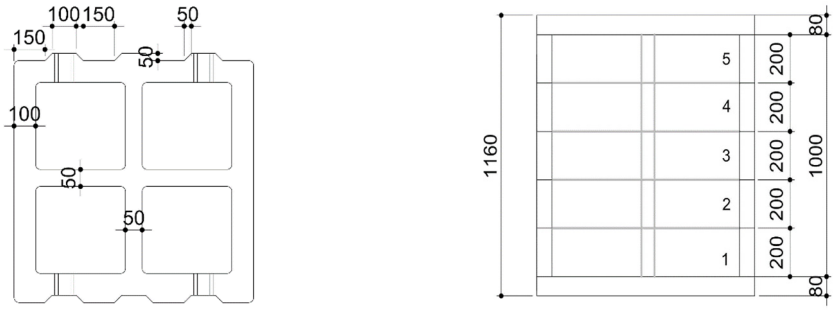

(**a**) Floor plan (**b**) Front view

Figure 7. Drawing of the unit structure (mm).

3. Experimental Results and Analysis

3.1. Strength

The compressive and flexural strength results of the specimen are presented in Figure 8 to indicate the properties of raw materials, indicating that the compressive and flexural strengths increase with increasing age. The compressive strengths were estimated to be 15.0 MPa (7 days of age), 23.0 MPa (14 days), and 29.0 MPa (28 days), and the flexural strengths were 4.5 MPa (7 days), 5.8 MPa (14 days), and 7.3 MPa (28 days). When the age exceeded 14 days, the compressive strength criterion (16.0 MPa) for porous revetment blocks in SPS-KCIC0001-0703 [22] and the flexural strength criterion (5.0 MPa) for water-permeable blocks in KS F 4419 [23] are satisfied. In particular, a flexural strength exceeding 7.3 MPa is developed in 28 days. This value appears to be high considering that sidewalk blocks, as red clay water-permeable block products, can be easily damaged in the transport process and on-site installation stage after forming with the existing flexural strength criterion.

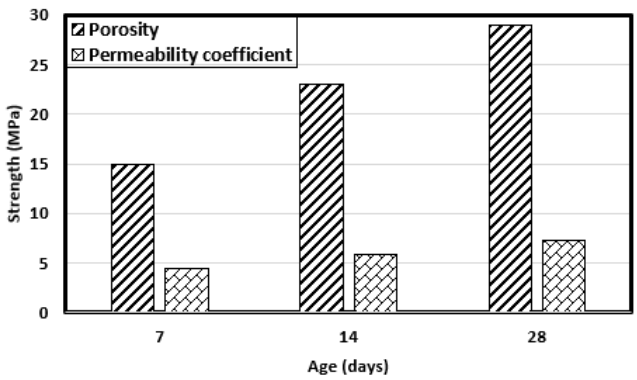

Figure 8. Strength test results.

3.2. Porosity and Permeability Coefficient

Figure 9 presents the porosity and permeability coefficient measurement results. The porosity is 22.6%, and the permeability coefficient is 0.86 mm/s. The porosity measurement results satisfy the porosity mix design target (22.0%), which can increase the amount of water to be contained in the structure and improve its permeability. The permeability coefficient was more than eight times higher than the permeability coefficient criterion (0.1 mm/s) for permeable blocks, according to KS F 4419 [23]. The rainwater detention structure is expected to drain a large amount of water underground quickly while retaining it during heavy rainfall.

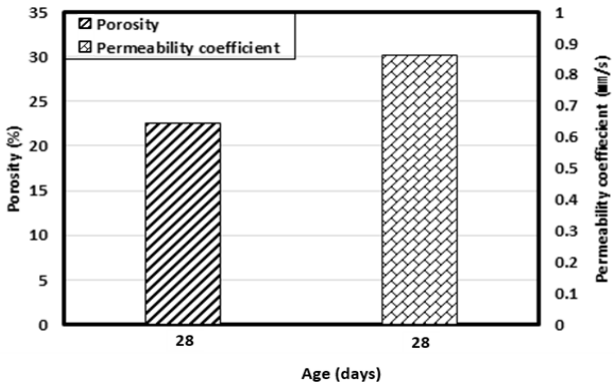

Figure 9. Porosity and permeability coefficient.

3.3. Maximum Compressive Load of the Unit Structure

To examine the safety of the eco-friendly rainwater detention system against the top load during field application, the maximum compressive load of the unit structure was measured and the result was found to be 2030 kN. This value represents the stress required for the uniformly distributed failure load in the vertical direction. Figure 10 shows the compressive load test of the unit structure.

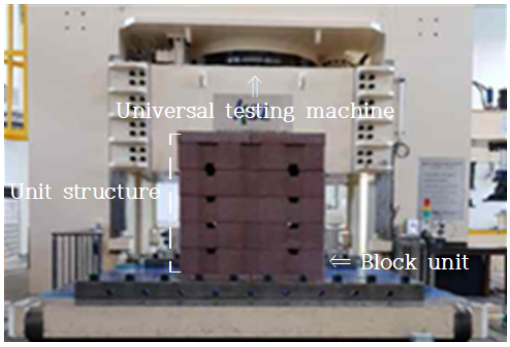

Figure 10. Maximum compressive load test of the unit structure (Seismic isolation device test machine (JKS, Korea)).

3.4. Computational Finite Element Analysis of the Unit Structure

The computational finite element analysis results of the unit structure showed that the maximum stress of 16.6 MPa occurred on the inner wall in the upper part. The maximum stress of the top plate was 0.94 MPa, and the maximum stress of the outer wall was 0.83 MPa. The maximum displacement of 4.75 mm occurred in the center of the upper plate. The maximum stress occurred in the compressed state. Accordingly, the structure is safe considering the raw material compressive strength result of 29.0 MPa (28 days). Figures 11 and 12 present the computational finite element analysis results for stress and displacement. Table 9 summarizes the static analysis results.

3.5. Leaching Test

Table 10 lists the results of the leaching test. The pH is weakly alkaline due to the inorganic powder, the main component of which is red clay; however, the pH is expected to become neutral over time. Moreover, we found that there would be no impacts on the soil and groundwater environment because no toxic substances, such as cadmium, organic phosphorus, lead, hexavalent chromium, arsenic, total mercury, PCB, and benzene, were detected.

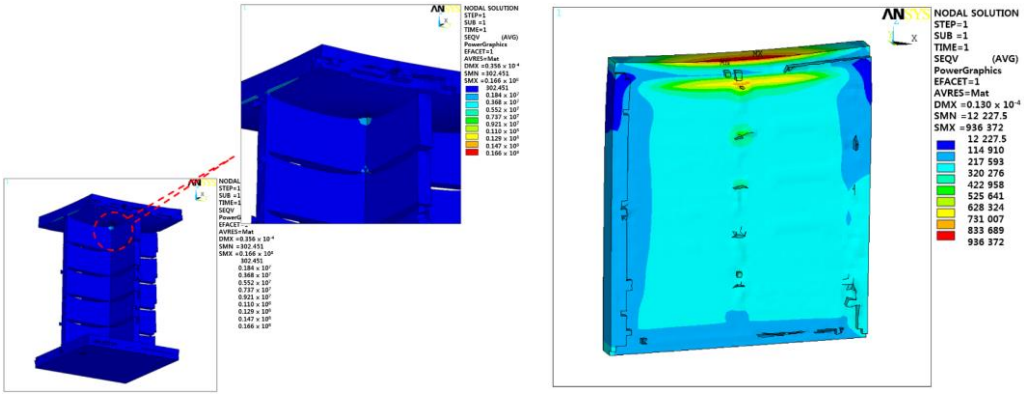

(**a**) Maximum stress (16.6 MPa) (**b**) Top plate (0.94 MPa)/outer wall (0.83 MPa)

Figure 11. Computational finite element analysis results (stress).

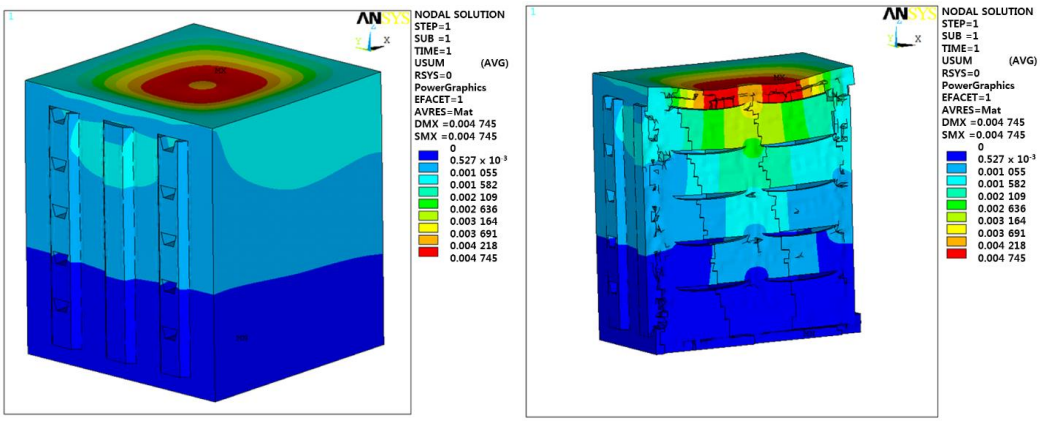

(**a**) Maximum displacement (4.75 mm) (**b**) Position of the maximum displacement

Figure 12. Computational finite element analysis results (displacement).

Table 9. Summary of static analysis results.

Analysis Method	Maximum Stress (MPa)	Maximum Displacement (mm)	Relevance Assessment
Static analysis	Outer wall: 0.83 (compressive strength) Interior wall: 16.6 (compressive strength) Top plate: 0.94 (compressive strength) <29.0 (compressive strength)	4.75	O.K

Table 10. Leaching test results.

Substance	Criterion	Test Result
Cadmium	0.01 mg/L or less	Not detected
Organic phosphorus	Not detected	Not detected
Lead	0.01 mg/L or less	Not detected
Hexavalent chromium	0.05 mg/L or less	Not detected
Arsenic	0.01 mg/L or less	Not detected
Total mercury	0.0005 mg/L or less	Not detected
PCB	Not detected	Not detected
Benzene	0.01 mg/L or less	Not detected
pH	-	9.5

4. Economic Feasibility Analysis

In this study, the rainwater management capacity required for the development of an apartment complex by private construction companies was calculated based on the Basic Plan for Rainwater Management in Seoul [27] to evaluate the economic feasibility of the eco-friendly rainwater detention system. Accordingly, we calculated the design water quantity through the application of the existing PE infiltration detention tank and the eco-friendly rainwater detention system. In addition, the economic feasibility was compared and analyzed by calculating the design construction cost and life cycle cost (LCC). The overview of the target site is presented in Table 11, and the status of the site is shown in Figure 13. In this study, the permeable pavement and rainwater utilization facilities of the target site were incorporated in a similar manner to the existing rainwater detention system. However, in the case of infiltration facilities, the infiltration gutter, infiltration trench, and dry well were applied to the existing system, whereas only the rainwater detention tank was applied to the eco-friendly rainwater detention system.

Table 11. Overview of the target site.

Facility Name	OOO Complex	Location	OO-gu OO-dong
Rainwater share (A)		5.5 m/h: private (large facility)	
Site area (B)	13,360 m^3	Green area (C)	1400 m^3
Building area (D)	2600 m^3	Saturated permeability coefficient	0.01643 m/h
Target area (E)	12,520 m^3	(E = B − (C × (3/5))) ※ Under a rainwater share of 5.5 mm/h	
Required capacity (F)	68.9 m^3/h	F = A × E/1000	

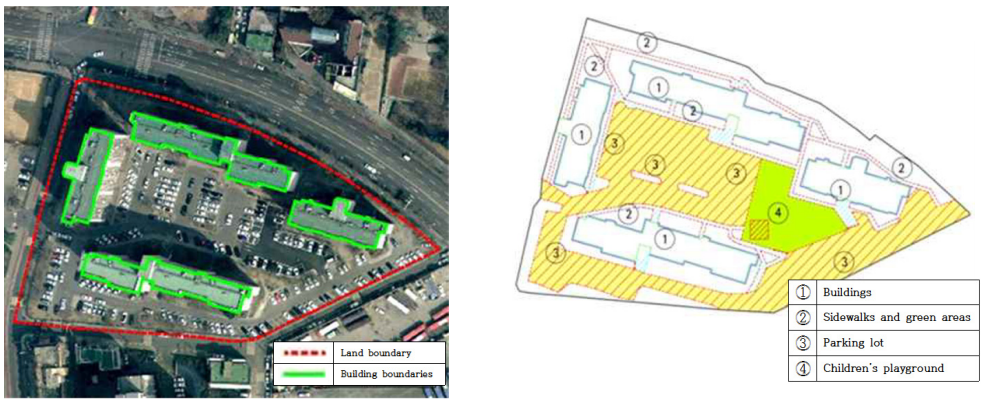

Figure 13. Status of the target site.

4.1. Calculation of the Design Water Quantity

The target site for the economic feasibility analysis in this study was an apartment complex, where appropriate measures must be undertaken for rainfall runoff of 5.5 mm/h. Therefore, the required rainwater management capacity was 68.9 m^3/h (rainwater share × target area). The design water quantity was calculated when the required rainwater management capacity was applied to the existing system PE infiltration detention tank and the eco-friendly rainwater detention system. The design water quantity was 7.30 m^3/h and 73.6 m^3/h for the existing system and eco-friendly rainwater detention system, respectively. Table 12 lists the calculated design water quantities.

Table 12. Design water quantity of the existing system and eco-friendly rainwater detention system.

Category			Facility Name	Specific Infiltration (m^2/m^2, m, ea)	Unit Design Infiltration (1)	Design Water Quantity (2) (m2)	Design Quantity (m^3/h)	Total (m^3/h)
A *	C *	Pavement	Permeable pavement (T0.24)	1.290	0.017	300.0	5.10	73.0
			Permeable pavement (T0.25)	1.291	0.017	400.0	6.80	
		Infiltration gutter	Infiltration gutter W250	3.888	0.052	200.0	10.4	
			Infiltration gutter W300	4.265	0.057	200.0	11.400	
		Infiltration trench	Infiltration trench W300	4.265	0.057	250.0	14.250	
			Infiltration trench W400	5.151	0.069	250.0	17.250	
		Dry well	Circular well D800A	17.148	0.228	5.0	1.140	
			Square well W800A	18.469	0.246	5.0	1.230	
		Rainwater utilization	Utilization facility	-	-	100	5.582	
B *		Pavement	Permeable pavement (T0.24)	1.290	0.017	300.0	5.10	73.6
			Permeable pavement (T0.25)	1.291	0.017	400.0	6.80	
		Rainwater detention tank	Continuous square well W1000A	19.13	1.306	43.0	56.16	
		Rainwater utilization	Utilization facility	-	-	100.0	5.582	

* A: The existing system, B: Eco-friendly rainwater detention facility, C: Infiltration facility.

4.2. Design and Construction Costs

The construction cost was calculated by applying the material cost, labor cost, and expenses, based on the design water quantity. When the material cost was calculated based on the main structure (infiltration facilities) of each system, the labor costs required for installation and the expenses were compared. The construction costs were found to be KRW 54,245,120 and KRW 37,807,760 for the existing and eco-friendly rainwater detention systems, respectively. When the eco-friendly rainwater detention system was applied, the total construction cost decreased by approximately 30% owing to reduction in the material and construction costs by approximately 45% and 15%, respectively. This decrease occurred because of the reduction in production cost caused by the mass-production possibility of red clay water-permeable blocks, which constitute the primary structure of the eco-friendly rainwater detention system, and the simple construction through the assembly of the red clay blocks. Table 13 presents the details of the construction cost.

Table 13. Details of the construction cost.

Item	Existing System			Eco-Friendly Rainwater Detention System			Reduced Construction Cost	
	Facility	Design Water Quantity	Construction Cost (KRW) **	Facility	Design Water Quantity	Construction Cost (KRW) **	Construction Cost (KRW)	Reduction Rate
A *	A (T0.24)	300 m^2	11,663,100	A (T0.24)	300 m^2	11,663,100	0	0%
	A (T0.25)	400 m^2	17,082,800	A (T0.25)	400 m^2	17,082,800	0	
	Sub total	700 m^2	28,745,900	Sub total	700 m^2	28,745,900	0	

Table 13. *Cont.*

Item	Existing System			Eco-Friendly Rainwater Detention System			Reduced Construction Cost	
	Facility	Design Water Quantity	Construction Cost (KRW) **	Facility	Design Water Quantity	Construction Cost (KRW) **	Construction Cost (KRW)	Reduction Rate
B *	D (W250) D (W300) E (W300) E (W400) F (D800A) G (W800A)	200 m 200 m 250 m 250 m 5 EA 5 EA	7,095,140 7,911,940 10,733,625 13,142,375 5,861,900 7,138,040	H (W1000)	43 m	37,807,760 (69.6%)	16,437,360	30%
	Sub total	-	54,245,120 (100%)	Sub total	-	37,807,760 (69.6%)		
C *	Utilization facility	100 m^3	12,000,000	Utilization facility	100 m^3	12,000,000	0	0%
Total	-	-	94,991,020	-	-	78,553,660	17,011,920	18%

* A: Permeable pavement, B: Infiltration facility, C: Utilization facility, D: Infiltration gutter, E: Infiltration trench, F: Circular well, G: Square well, H: Assembly-type red clay rainwater infiltration facility. ** For the labor cost, material cost, and expense for each facility, standard estimates for civil-engineering work in Jecheon City in 2015 were applied.

4.3. LCC Analysis

For LCC analysis, all the costs necessary for an appropriate life cycle based on one ton of the product, including the acquisition cost, dismantling cost, and sediment removal cost required for maintenance, were compared. In the design criteria for concrete structure durability, a compressive strength of 27 MPa or more suggests a useful life standard of 65 years or more and less than 100 years [28–30]. Because the eco-friendly rainwater detention system is a secondary concrete product and the compressive strength at 28 days of age is 29.0 MPa, its lifetime was set to 80 years. The lifetime of the existing system was set to 40 years because it uses PE materials and has low durability due to the surrounding earth pressure and creep. Tables 14 and 15 present the LCC analysis and sediment removal cost analysis results, respectively.

Table 14. LCC analysis.

Category	Cost		Reduction Rate (%) (Eco-Friendly/Existing)	Remark
	Eco-Friendly Rainwater Detention System	Existing System		
Lifetime	80 years	40 years	-	-
Acquisition cost	1,040,552	2,500,976	-	Based on 80 years
Dismantling cost	14,947	29,894	-	Based on 80 years
Total	1,055,499	2,530,870	−58.29%	-
Sediment removal cost	118,910	155,773	−23.66%	-

The acquisition cost of the eco-friendly rainwater detention system is 58.3% lower than that of the existing system. In addition, the cost to remove sediments that are inevitably generated in rainwater detention facilities according to the "standards on the types, structures, installation, and maintenance of rainwater runoff reduction facilities (2010, National Fire Agency)" [31] is 23.7% lower than that of the existing system. This difference exists because the sediment removal process of the eco-friendly rainwater detention system is simpler than that of the existing system, reducing direct material and labor costs.

Table 15. Sediment removal cost analysis.

Category	Expense Rate	Cost		Remark
		Eco-Friendly Rainwater Detention System	Existing System (PE Infiltration Facility)	
Direct material cost	-	357	1944	Expense rate: standard expense rate in 2015 for calculating civil engineering/landscape/industrial and environmental facility construction costs
Labor cost	-	84,425	109,361	
Expense	-	3942	5106	
General maintenance cost	6%	5323	6984	
Profit	15%	14,053	18,217	
Total	-	108,100	141,612	
VAT	10%	10,810	14,161	

Accordingly, the eco-friendly rainwater detention system has higher economic feasibility than the existing PE infiltration detention tank.

5. Conclusions

In this study, we evaluated the engineering properties of an eco-friendly rainwater detention system in terms of the material and the safety of a red clay water-permeable block structure and compared the economic feasibility of the system with that of an existing PE infiltration detention tank. The results of this study can be summarized as follows.

- We analyzed the durability of an eco-friendly red clay water-permeable block fabricated by applying non-firing technology to red clay and found that the compressive strength criterion (16.0 MPa) for porous revetment blocks in SPS-KCIC0001-07038 [12] and the flexural strength criterion (5.0 MPa) for water-permeable blocks in KS F 4419 [13] were satisfied at 14 days of age.
- During heavy rainfall, the red clay water-permeable block is expected to drain a large amount of water underground while retaining it because its porosity and permeability coefficients are 22.6% and 0.86 mm/s, respectively.
- The maximum compressive load of the unit structure, comprising red clay water-permeable block units, was 2030 kN, indicating that it is safe against fracturing caused by the uniformly distributed failure load in the vertical direction.
- The computational finite element analysis of the unit structure confirmed its structural safety, with its maximum stress and maximum displacement being 16.6 MPa and 4.75 mm, respectively.
- The results of the leaching test conducted to evaluate eco-friendliness showed that there will be no impact on the soil and groundwater environment because no heavy metals, such as cadmium, lead, chromium, arsenic, and mercury, or organic compounds, such as benzene and PCB, were detected.
- Furthermore, the economic feasibility of the existing system (PE infiltration detention tank) and the eco-friendly rainwater detention system was compared. The results showed that the eco-friendly rainwater detention system has excellent economic feasibility because the construction cost and LCC are reduced by approximately 30% and 58%, respectively, compared to those of the existing system.

Based on the above results, it is expected that improved safety, eco-friendliness, and economic feasibility can be achieved, compared to the existing system, if the eco-friendly rainwater detention system is applied in the field.

Author Contributions: Conceptualization, H.C. (Hyeonggil Choi) and T.L.; methodology, H.C. (Hyeonggil Choi); software, H.K.; validation, H.C. (Hyeonggil Choi), T.L. and H.C. (Heeyong Choi); formal analysis, H.K.; investigation, H.K.; resources, H.C. (Hyeonggil Choi); data curation, H.K.; writing—original draft preparation, H.K.; writing—review and editing, H.C. (Hyeonggil Choi); visu-

alization, T.L.; supervision, H.C. (Hyeonggil Choi); project administration, T.L.; funding acquisition, H.C. (Heeyong Choi). All authors have read and agreed to the published version of the manuscript.

Funding: This research was funded by the Korea Agency for Infrastructure Technology Advancement (KAIA) grant funded by the Korea government (MOLIT), grant number 21RITD-C162704-02.

Informed Consent Statement: Not applicable.

Data Availability Statement: Not applicable.

Conflicts of Interest: The authors declare no conflict of interest.

References

1. Jeong, Y.S.; Cho, S.; Mun, S.H.; Ji, C. Scenario to Reduce Greenhouse Gas Emissions in Building Sector towards the goal of Carbon Neutrality by 2050. *J. Archit. Inst. Korea* **2021**, *37*, 189–197.
2. The Government of the Republic of Korea. *2050 Carbon Neutral Strategy*; The Government of the Republic of Korea: Seoul, Korea, 2020.
3. Ministry of Environment. *Road Map for the Achievement of National INDC, KOREA*; Ministry of Environment: Seoul, Korea, 2014.
4. IPCC. *2001: Climate Change*; IPCC: Geneva, Switzerland, 2001.
5. Cheng, C.C.; Pouffary, S.; Svenningsen, N.; Callaway, J.M. *The Kyoto Protocol, The Clean Development Mechanism and the Building and Construction Sector: A Report for the UNEP Sustainable Buildings and Construction Initiative*; UNEP SBCI: Paris, France, 2008.
6. Gartner, E. Industrially Interesting Approaches to "Low-CO_2" Cements. *Cem. Concr. Res.* **2004**, *34*, 1489–1498. [CrossRef]
7. Lee, S.H.; Kim, S.K. *CO_2 Reduction in the Cement Industry, Concrete and Environment*; Kimoondang: Seoul, Korea, 2011; pp. 16–30.
8. Yang, K.H.; Moon, J.H. Design of Supplementary Cementitious Materials and Unit Content of Binder for Reducing CO_2 Emission of Concrete. *J. Korea Concr. Inst.* **2012**, *24*, 597–604. [CrossRef]
9. Schneider, M. Process technology for efficient and sustainable cement production. *Cem. Concr. Res.* **2015**, *78*, 14–23. [CrossRef]
10. Lee, M.H. Fundamental properties of mortar and concrete using high-calcium fly ash. *J. Korean Recycl. Constr. Resour. Inst.* **2016**, *4*, 284–291.
11. Perkins, S.E.; Argueso, D.; White, C.J. Relationships between climate variability, soil moisture, and Australian heatwaves. *J. Geophys. Res. Atmos.* **2015**, *120*, 8144–8164. [CrossRef]
12. Han, Y.H.; Lee, T.G. Development and Effects Analysis of The Decentralized Rainwater Management System by Field Application. *KIEAE J.* **2014**, *14*, 15–21. [CrossRef]
13. Lee, T.G.; Han, Y.H. Analysis to Select Filter Media and The Treatment Effect of Non-point Pollution Source in Road Runoff. *KIEAE J.* **2014**, *14*, 55–63. [CrossRef]
14. Lee, C.-Y.; Kim, J.-H.; Hyung, W.-G. Properties of Non-Sintered Cement Mortar using Non-Activated Hwangto. *J. Korea Soc. Waste Manag.* **2019**, *36*, 82–87. [CrossRef]
15. Mun, S.W.; Kang, Y.S.; Park, J.H.; Han, M.S.; Jeong, H.Y. A Study on the Making Properties of Natural Pigments Based on Substance Characteristics for Hwangto in Korea. *J. Conserv. Sci.* **2019**, *35*, 600–611. [CrossRef]
16. Kwon, S.-J.; Kim, H.-J.; Yoon, Y.-S. The Evaluation of Durability Performance in Mortar Curbs Containing Activated Hwangtoh. *J. Korean Recycl. Constr. Resour. Inst.* **2020**, *8*, 4.
17. Lee, H.-S.; Jeong, G.-W.; Choi, C.; Ahn, G.; Nah, J.-W. Flocculation and Algicidal Effect of Mixture of Red-soil or Clay and Chitosan against Harmful Green-Tide. *J. Chitin Chitosan* **2017**, *22*, 47–53. [CrossRef]
18. Park, Y.-T.; Park, H.-S.; Park, T.-G.; Ahn, G.-H.; Son, M.-H.; Kim, P.-J.; Park, M.-E. Effects of Yellow Clay Contents on Removal Efficiency of Harmful Dinoflagellate Cochlodinium Polykrikoides. *J. Fish. Mar. Sci. Educ.* **2016**, *28*, 1662–1672.
19. Yang, S.W.; Kim, S.M. Development of biochar modified loess mortar and evaluation of strength and thermal performance. *J. Archit. Inst. Korea* **2019**, *39*, 328.
20. Heo, J.N.; Lee, J.K.; Hyung, W.G. Properties of non-sintered hwangtoh mortar using eco-friendly inorganic binding material. *J. Korea Concr. Inst.* **2014**, *26*, 449–506.
21. Korean Intellectual Property Office. *Non-Heating Clay Composites for Building Materials*; Korean Intellectual Property Office: Daejeon, Korea, 2002.
22. Federation of Korea Concrete Industry Cooperatives. *Standards of private sectors, Concrete Blocks for Retaining Wall and Revetment*; SPS-KCIC0001-0703; Federation of Korea Concrete Industry Cooperatives: Goyang, Korea, 2020.
23. Korean Industrial Standards. *Concrete Interlocking Block for Sidewalk and Road*; KS F 4419; Korean Standards Association: Seoul, Korea, 2021.
24. ANSYS Inc. *ANSYS Mechanical APDL Structural Analysis Guide*; ANSYS Inc.: Canonsburg, PA, USA, 2013.
25. Japanese Industrial Standard Committee. Testing methods for industrial wastewater, JIS K 0102. In *JIS Handbook Environmental Technology*; Japanese Industrial Standard Committee: Tokyo, Japan, 1996; pp. 1049–1264.
26. Wikipedia. Available online: https://en.wikipedia.org/wiki/PH_meter (accessed on 1 December 2021).
27. Seoul Metropolitan Government. *General Plan for Rainwater Management*; Seoul Metropolitan Government: Seoul, Korea, 2013.
28. Lee, H.-S.; Shin, S.-W.; Tae, S.-H. The development status and the future research trend of sustainable concrete. *Mag. Korea Concr. Inst.* **2009**, *21*, 34–40.

29. Korea Concrete Institute. *Design Criteria for Durability of Concrete Structure*; KDS 14 20 40; Korea Concrete Institute: Seoul, Korea, 2021.
30. Japan Concrete Engineering Society. *Performance Evaluation Guidelines for Existing Concrete Structures*; Japan Concrete Engineering Society: Tokyo, Japan, 2014; p. 108.
31. National Emergency Management. *Type·Structures·Installation and Maintenance Standards of Stormwater Runoff Reduction Facilities*; National Emergency Management: Seoul, Korea, 2010.