Water **2012**, *4*, 650-669; doi:10.3390/w4030650

OPEN ACCESS

water

ISSN 2073-4441

www.mdpi.com/journal/water

Article

Upgrading of Wastewater Treatment Plants Through the Use of Unconventional Treatment Technologies: Removal of Lidocaine, Tramadol, Venlafaxine and Their Metabolites

Paola C. Rúa-Gómez [1,*], Arlen A. Guedez [1], Conchi O. Ania [2] and Wilhelm Püttmann [1]

[1] Institute of Atmospheric and Environmental Sciences, Department of Environmental Analytical Chemistry, J.W. Goethe University Frankfurt am Main, Altenhöferallee 1, Frankfurt am Main 60438, Germany; E-Mails: arlenaguedez@hotmail.com (A.A.G.); puettmann@iau.uni-frankfurt.de (W.P.)

[2] Instituto Nacional del Carbon (INCAR-CSIC), Apartado 73, Oviedo 33080, Spain; E-Mail: conchi.ania@incar.csic.es

* Author to whom correspondence should be addressed; E-Mail: ruagomez@iau.uni-frankfurt.de; Tel.: +49-69-798-40230; Fax: +49-69-798-40240.

Received: 1 June 2012; in revised form: 15 August 2012 / Accepted: 3 September 2012 / Published: 11 September 2012

Abstract: The occurrence and removal efficiencies of the pharmaceuticals lidocaine (LDC), tramadol (TRA) and venlafaxine (VEN), and their major active metabolites monoethylglycinexylidide (MEGX), *O*-desmethyltramadol (ODT) and *O*-desmethylvenlafaxine (ODV) were studied at four wastewater treatment plants (WWTPs) equipped with activated sludge treatment technologies. In parallel to activated sludge treatment, the removal efficiency of the compounds in pilot- and full-scale projects installed at the WWTPs was investigated. Within these projects two different treatment methods were tested: adsorption onto powdered/granulated activated carbon (PAC/GAC) and ozonation. The metabolite MEGX was not detected in any sample. The concentrations of the target analytes in wastewater effluents resulting from activated sludge treatment ranged from 55 to 183 (LDC), 88 to 416 (TRA), 50 to 245 (ODT), 22 to 176 (VEN) and 77 to 520 ng L^{-1} (ODV). In the pilot project with subsequent treatment with PAC/GAC, the mean concentrations of the analytes were between <LOQs and 30 (LDC), 111 (TRA), 140 (ODT), 45 (VEN) and 270 ng L^{-1} (ODV). In the pilot project with subsequent ozonation of the effluent from the conventional treatment the mean concentrations were below the limit of quantification (LOQ) for all of the investigated compounds. The results showed limitations of activated sludge treatment technologies in removing the target compounds but highlighted both

PAC/GAC adsorption and ozonation technologies as effective post-treatment processes for the elimination of the target compounds from wastewater in WWTPs. Possible oxidation by-products formed during ozonation were not analyzed.

Keywords: lidocaine; tramadol; venlafaxine; metabolites; ozonation; activated carbon adsorption

1. Introduction

The occurrence of pharmaceuticals and personal care products in the aquatic environment has received increasing scientific and public attention in recent years. A large number of these compounds, unchanged or as active metabolites, are continuously transferred into the sewage water. Their removal by wastewater treatment plants (WWTPs) is a major subject of concern. In a typical European WWTP, conventional treatment including screening, grit removal, preliminary sedimentation, activated sludge treatment, chemical phosphate removal and final sedimentation is used. In this way, mechanical and biological degradation are the only elimination processes applied. Some pharmaceuticals such as ibuprofen and bezafibrate have been demonstrated to be effectively removed (removal rates >95%) by biological wastewater treatment [1,2]. However, several pharmaceuticals are only poorly removed/degraded by conventional wastewater treatment [3–7], causing their continuous discharge into recipient waters and their presence in different water matrices at concentrations ranging from nanograms to low micrograms per liter [8–10]. Due to their therapeutic and biological activity, pharmaceutical discharges pose a great risk to the aquatic environment affecting water and soil-dwelling organisms. Many studies report adverse effects on different aquatic organisms after their exposure to pharmaceutical compounds at environmentally relevant concentrations [11–13]. An actual challenge in wastewater treatment is to optimize existing treatment technologies and/or to upgrade existing treatment plants with new end-of-pipe technologies in order to improve removal efficiencies of several micropollutants including pharmaceuticals.

Many additional treatment technologies for wastewater have been discussed over the last decades. One of them is the chemical oxidation by ozone. Ozonation of wastewater is an end-of-pipe technology, which was traditionally used for disinfection purposes and just recently has been investigated for the removal of micropollutants. Results from both pilot- and full-scale plants using ozonation after the biological treatment reported removal efficiencies of about 95% for several micropollutants [14,15]. The major issues of concern arising from ozonation of wastewater are related to the formation of oxidation by-products from matrix components and transformation products from micropollutants [16].

Another technology discussed for the improvement of waste water treatment is the adsorption of micropollutants onto activated carbon (AC), which can either be implemented as an end-of-pipe technology or can be added to an existing technology in a WWTP, e.g., AC in a pumped bed-membrane bioreactor [17,18]. The most common applications of AC for wastewater treatment are known as granular activated carbon (GAC) and powdered activated carbon (PAC). Both GAC and PAC had been commonly used for sorption of organic micropollutants like pesticides and taste compounds [19,20]. In

recent years, studies of AC adsorption in laboratory systems, pilot and full-scale drinking water treatment plants have been carried out reporting successful removal of some micropollutants including pharmaceuticals such as antibiotics and endocrine disrupting compounds [21–25]. There are many technologies available for the implementation of AC for wastewater treatment and each of them should be evaluated separately.

In a previous study the continuous WWTP discharge of the non-extensively studied pharmaceuticals lidocaine (LDC, anesthetic), tramadol (TRA, analgesic) and venlafaxine (VEN, antidepressant), and their major active metabolites desmethyltramadol (ODT) and desmethylvenlafaxine (ODV) has been reported [7,26], denoting the need improvement of available treatment units or application of alternative treatment technologies, which could mitigate the exposure of the aquatic organisms to such pharmaceutical compounds. Recent studies have demonstrated the presence of these compounds and their metabolites in some rivers and lakes in Europe and North America [6,8,27,28]. So far, studies concerning the removal of the compounds through unconventional technologies are scarce [14,29,30]. The main objectives of the present study were (a) to determine the efficiency of AC adsorption and ozonation for the removal of LDC, TRA, VEN and their major active metabolites; (b) to compare removal efficiencies of the analytes using alternative treatment technologies with the removal efficiencies using only biological treatment; and (c) to evaluate the influence of the investigated unconventional technologies on different performance parameters of a WWTP. Lab-scale experiments were carried out and wastewater samples from pilot- and full-scale projects at four different WWTPs in Germany were investigated.

2. Materials and Methods

2.1. Chemicals

LDC, TRA, VEN, and squalane (internal standard) were purchased from Sigma Aldrich (Steinheim, Germany). Monoethylglicinexylidide (MEGX) was kindly supplied by Astra Zeneca (Wedel, Germany). ODT, ODV and d6-TRA (internal standard) were obtained from Toronto Research Chemical Inc. (Toronto, Canada). The suppliers stated a chemical purity of 98% or greater for all reference compounds. Acetone was obtained from LS Labor Service (Griesheim, Germany) and was used as received. All other organic solvents were analytical grade (Carl Roth, Karlsruhe, Germany) and were distilled before use. Ultrapure water was generated using an Astacus ultrapure water purification system from MembraPure (Bodenheim, Germany). Individual stock solutions of each compound were prepared in methanol (1 μg μL^{-1}). Stock solution of the internal standard squalane (1 μg μL^{-1}) was prepared in hexane. Working standard solutions were obtained by appropriate dilution of stock solutions.

2.2. Characterization of ACs and Lab-Scale Adsorption Experiments

Textural characterization of the ACs Carbopal AP (Donau Carbon Corporation, Frankfurt am Main, Germany), Norit SAE Super (Norit Activated Carbon, Riesbürg, Germany), and Hydraffin XC30 (Donau Carbon Corporation, Frankfurt am Main, Germany) was carried out by measuring the N_2 adsorption isotherms at −196 °C. Before the experiments, the samples were outgassed under vacuum at 120 °C overnight. The isotherms were used to calculate the specific surface area, total pore volume,

and micropore volume evaluated applying the Dubinin-Radushkevich method [31]. Preliminary adsorption tests of selected analytes (LDC and TRA) onto the ACs were carried out at room temperature in stirred batch systems. Different amounts of the ACs (ranging from 10 to 110 mg) were weighed and added to glass beakers containing 200 mL aqueous solutions of each compound. Due to the high adsorption capacities of the activated carbons, high initial concentrations of 100 mg L^{-1} of the pollutants were used in the batch experiments. The solutions were allowed to shake for 72 h at a constant temperature. The amount adsorbed was determined according to $Q_t = (C_0 - Ct)V/m$, where Q_t is the amount (mg g^{-1}) adsorbed at time t, C_0 is the initial concentration (mg L^{-1}), C_t is the concentration at time t (mg L^{-1}), V is the volume (L) of the adsorbate solution and m is the weight (g) of the activated carbon. All adsorption assays and the corresponding blank experiments were made in duplicate.

2.3. Projects at the WWTPs and Sample Collection

Pilot- and full-scale projects at four different German WWTPs located in Langen (WWTP-A), Kaarst (WWTP-B), Schwerte (WWTP-C) and Wuppertal (WWTP-D) were investigated in this study over the period from June to October 2011. The schematic diagrams and the various sampling points are shown in Figure 1, while details regarding population served, applied treatment technologies, characteristics of installed projects at the WWTPs and operational settings during sample collection are summarized in Table 1. The yearly treatment volumes of the WWTPs vary from *ca.* 3 to 47 million m^3 a^{-1}. The installed technologies at all of the investigated WWTPs include mechanical, chemical and biological treatment. WWTP-A, WWTP-C and WWTP-D use conventional activated sludge wastewater treatment, including a secondary clarifier after the aeration tank. After the secondary clarifier the WWTP-D has a flocculation system consisting of 28 filter chambers, in which sludge and residual solids formed by the addition of a soluble iron compound are filtered. The WWTP-B uses a membrane bioreactor (MBR) as biological step, substituting the secondary clarifier of a conventional WWTP by membranes.

The project at the WWTP-A consists of a pilot-scale plant, where effluent from the secondary clarifier is treated by two parallel technologies: PAC adsorption coupled to membrane filtration (PAC-MEM), and down flow fixed-bed columns filled with GAC (GAC-columns). From the second clarifier, treated wastewater is continuously pumped through a microfilter with a mesh size of *ca.* 0.3 mm and then deposited in a stirred collection tank. From this tank the wastewater is pumped to each investigated treatment system. The PAC-MEM system consists of a stirred contact tank (1 m^3), in which the PAC Carbopal AP is mixed with the biologically treated wastewater, followed by a hollow fiber ultrafiltration membrane (membrane pore size = 0.1 µm). The GAC-columns system operating in parallel at the WWTP-A, consists of two acrylic glass columns filled each one with 9.6 kg of GAC Hydraffin XC30. Another filter with a mesh size of *ca.* 0.1 mm is installed before the GAC columns. Each column has an internal diameter of 14.5 cm and an active length of 127 cm, resulting in a bed volume of 21 L.

In the project at the WWTP-B (PAC-in-MBR), the wastewater influent is pumped into a pilot-scale MBR (685 L). Experiments are conducted adding PAC Carbopal AP to the ultrafiltration membrane module in the MBR [membrane pore size = 0.05 µm (manufacturer's data)], which attempts to

reproduce the operation conditions of the MBR at the WWTP-B [membrane pore size = 0.04 µm (manufacturer's data)].

Figure 1. Schematic diagrams of the selected WWTPs (**a**) WWTP-A; (**b**) WWTP-B; (**c**) WWTP-C; (**d**) WWTP-D and the pilot-/full-scale projects. Sampling points are indicated by a cross.

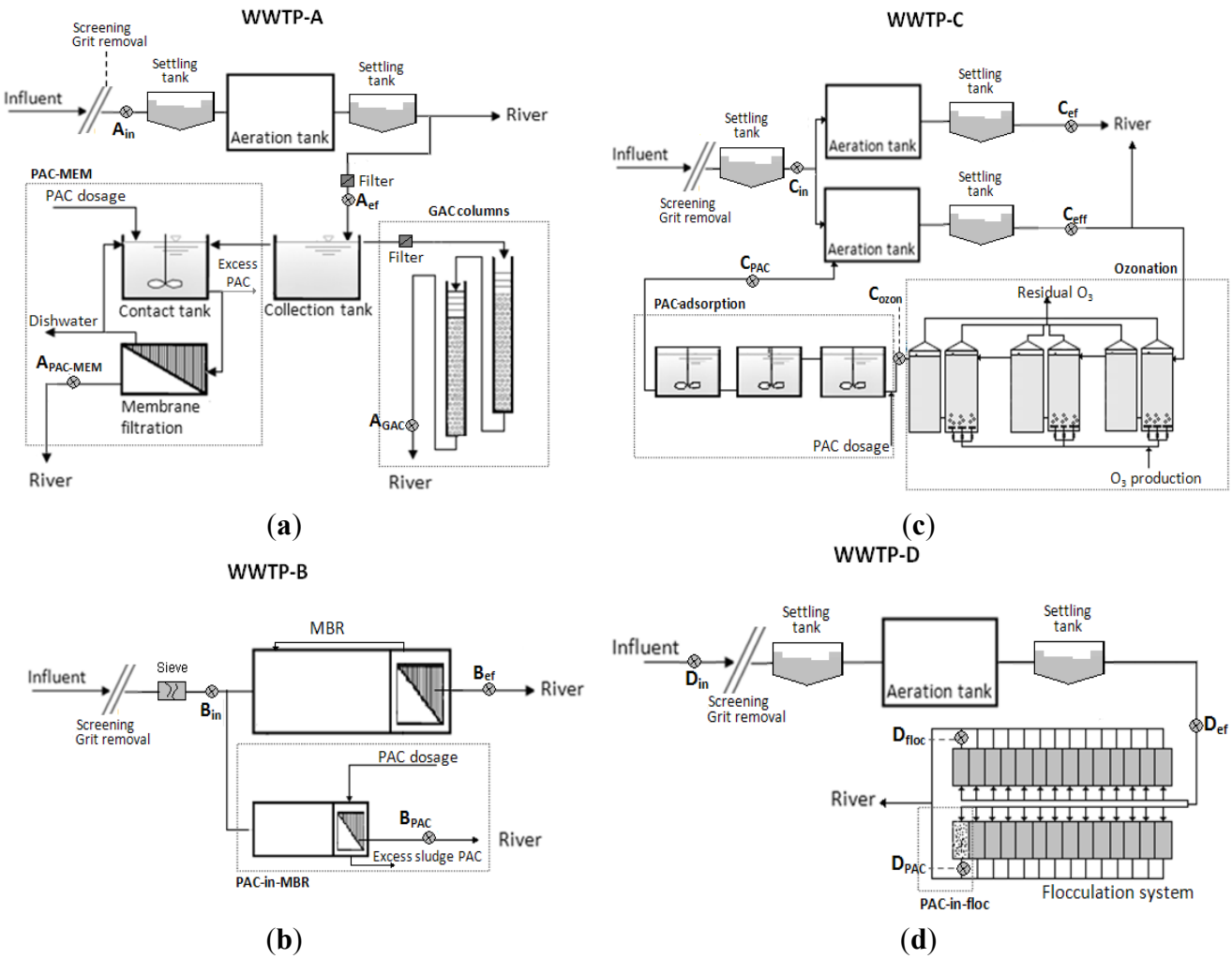

Experiments are performed at the full scale project at the WWTP-C. WWTP-C influent wastewater is evenly distributed between two conventional treatment systems with similar dimensions and operational settings. The effluent from one of these systems is discharged into the river. A fraction of the effluent of the other system (the difference between the maximum hydraulic loading of the secondary clarifier and the amount of wastewater by dry weather) is pumped to an ozonation plant consisting of six reactors (192 m^3) dosing O_3 per liter of wastewater. Thereafter, wastewater flows into a PAC-adsorption system consisting of three stirred tank reactors (450 m^3). The adsorbent is the PAC Norit SAE Super. After spending time in the stirred tank reactors, the wastewater/PAC mixture is pumped into the nitrification stage at the aeration tank.

The full-scale project at the WWTP-D (PAC-in-floc) consists of adding PAC Norit SAE Super to one filter chamber of the flocculation unit. In the filter chamber, the PAC is retained in the different heights of the filter bed and quantitatively removed every 24 h by the filter backwash.

Seven-day composite samples of the WWTP-A effluent (A_{ef}, $n = 4$), the permeate of the PAC-MEM system ($A_{PAC\text{-}MEM}$, $n = 4$) and effluent of the GAC columns (A_{GAC}, $n = 4$) were collected for analysis. A_{ef}, $A_{PAC\text{-}MEM}$ and A_{GAC} samples were initially adjusted to a pH < 2 in order to avoid possible further degradation in the flask collection due to the relative long collection period. Unfortunately, due to technical difficulties it was not possible to collect WWTP-A influent samples in the same way as the other samples at A_{ef}, $A_{PAC\text{-}MEM}$ and A_{GAC}. For this reason, twenty-four-hour composite samples of the WWTP-A influent (A_{in}, $n = 2$) and of A_{ef} ($n = 2$) were additionally collected in order to calculate the removal efficiencies of the target analytes by conventional wastewater treatment.

Table 1. Characteristics, operating conditions and description of the pilot- and full-scale projects at the investigated WWTPs during the sampling collection.

Characteristics	WWTPs			
	WWTP-A	**WWTP-B**	**WWTP-C**	**WWTP-D**
Treatment technology	Conventional activated sludge	Membrane bioreactor (MBR)	Conventional activated sludge	Conventional activated sludge
Sampling period	01/08/2011−06/09/2011	01/09/2011−06/10/2011	08/08/2011−18/08/2011	09/08/2011−15/08/2011
Population served (PE)	74,000	69,000	50,000	370,000
Average flow (m^3/a)	6,000,000	5,500,000	6,000,000	47,000,000
Wastewater type	98% R, 2% I	98% R, 2% I	92% R, 8% I	81% R, 19% I
Collection system	Combined	Combined	Combined	Combined
HRT (h)	18	28.5	38	51
SRT_{sludge} (d)	25–30	26	22	12
T (°C)	19.4	17.5	19.7	18.4

Characteristics	Investigated projects at each WWTP					
	1. PAC adsorption followed by membrane filtration (PAC-MEM) 2. GAC columns		MBR-PAC integrated system (PAC-in-MBR)	Ozonation followed by PAC-adsorption		PAC adsorption in flocculation system (PAC-in-floc)
Dimension	Pilot-scale		Pilot-scale	Full-scale		Full-scale
Project	**PAC-MEM**	**GAC-columns**	**PAC-in-MBR**	**Ozonation**	**PAC-ad.**	**PAC-in-floc**
AC type	Carbopal AP	Hydraffin XC30	Carbopal AP	-	Norit SAE Super	Norit SAE Super
AC dosage (mg AC/L of wastewater)	5	-	10	-	15	20
Transferred ozone dose (mg O_3/L of wastewater)	-	-	-	0.6	-	-
HRT (h)	0.9	-	24	0.4	0.9	0.4
SRT_{carbon} (day)	1	-	25[a]	-	22[a]	0.5
EBCT (h)	-	0.4	-	-	-	-

[a] SRT of the AC with the activated sludge; PE: population equivalent; R: residential; I: industrial/commercial; HRT: hydraulic retention time; SRT: solid retention time; EBCT: empty bed contact time.

Twenty-four-hour composite samples were collected at the other investigated WWTPs. At WWTP-B: influent (B_{in}, $n = 4$), effluent from the MBR (B_{ef}, $n = 4$) and permeate of the PAC-in-MBR (B_{PAC}, $n = 4$)

were collected. At WWTP-C samples collected were: influent (C_{in}, n = 8), effluent from the conventional treatment (C_{ef}, n = 8), effluent from ozonation unit (C_{ozon}, n = 8), effluent from the PAC-adsorption system (C_{PAC}, n = 8) and final effluent from the secondary clarifier containing wastewater treated by ozonation and PAC-adsorption units (C_{eff}, n = 8). At WWTP-D investigated samples were: influent (D_{in}, n = 6), effluent from the secondary clarifier (D_{ef}, n = 6), effluent from a filter chamber of the flocculation system with no addition of PAC (D_{floc}, n = 6) and effluent from the filter chamber, to which PAC was added (D_{PAC}, n = 6). Samples were collected simultaneously in the sample locations at each WWTP using automatic samplers (time-proportional) and then stored in brown glass bottles and cooled at 4 °C in the dark until processing in laboratory within 7 days after sampling.

2.4. Analytical Methods

Target analytes were extracted from the wastewater samples (untreated wastewater: 250 mL, wastewater treated by conventional technologies: 500 mL, wastewater treated by unconventional technologies: 1 L) by solid phase extraction (SPE) using Bond Elute PPL cartridges (100 mg/1 mL, Varian, Darmstadt, Germany). Samples from the sampling locations at the WWTP-A were neutralized to pH between 7.2 and 7.5 by addition of a NaOH solution before SPE. Water samples were filtered by pressure filtration using 1 µm borosilicate glass fiber filter (Type A/E, Pall, Dreieich, Germany) prior to SPE. Cartridges were eluted with methanol/acetone (1/1, *v*/*v*) and extracts were dried and dissolved in methanol. Squalane and d6-TRA were added to the extracts as internal quantification standards. Quantification of the analytes in extracts was performed using a Trace GC Ultra gas chromatograph (equipped with a TG-5MS capillary column) coupled to a DSQ II mass spectrometer (Thermo Scientific, Dreieich) operated in full scan mode (*m/z* 50–650) with electron impact ionization (70 eV). See Rúa-Gómez and Püttmann [7] for a detailed description of the applied analytical method. Briefly, ultra pure helium (≥99.999%) was used as the carrier gas (1.1 mL min^{-1} flow), and the column oven temperature was increased from 80 to 300 °C at 4 °C min^{-1}, and maintained for 30 min at 300 °C. Sample aliquots of 1 µL were injected in the splitless mode (injector temperature 240 °C). Acquired data were processed using Xcalibur software Version 2.0.7 (Thermo Scientific, Dreieich, Germany).

Samples were collected in 1-L brown glass bottles. These were rinsed before use with ultrapure water and methanol and then heated to 110 °C for a minimum of 2 h. Before use glass fiber filters were washed with dichloromethane and then heated in an oven for 2 h at 400 °C. Blank samples, consisting of ultrapure water, were extracted and treated in the same way as field samples to test for sample contamination during transportation and preparation.

In accordance with DIN 32645 German Institute for Standardization [32] limit of detection (LOD) for LDC, TRA, VEN and the metabolites MEGX, ODT and ODV was calculated from measured calibration curves. The limit of quantification (LOQ) was estimated as three times the LOD and provided values of 16 (LDC), 50 (MEGX), 25 (TRA), 18 (VEN), 35 (ODT) and 23 ng L^{-1} (ODV). Recovery rates were calculated for the entire method by spiking the target analytes into 1-L groundwater samples (n = 6), 0.5-L treated wastewater samples (n = 6) and 0.2-L untreated wastewater samples (n = 6), at a spiking level of 200 ng L^{-1}. Mean recoveries in groundwater were: 81 ± 5% (LDC), 59 ± 3% (MEGX), 82 ± 7% (TRA), 94 ± 9% (VEN), 71 ± 9% (ODT) and 94 ± 4% (ODV); in treated wastewater: 66 ± 8% (LDC), 53 ± 8% (MEGX), 64 ± 5% (TRA), 82 ± 5% (VEN), 59 ± 4% (ODT) and

86 ± 4% (ODV); and in untreated wastewater: 56 ± 4% (LDC), 49 ± 9% (MEGX), 61 ± 6% (TRA), 79 ± 6% (VEN), 51 ± 9% (ODT) and 71 ± 11% (ODV). No adjustments to concentrations in the samples were made in regard to the SPE recovery rates.

After equilibration, LDC and TRA concentrations in the solutions from the lab-scale adsorption tests were determined using a UV-VIS spectrophotometer UVPC2400 (Shimadzu, Duisburg, Germany) equipped with tungsten and deuterium lamps as light sources. After calibration of the instrument for each analyte, detection wavelength was set to 230 nm (LDC) and 270 nm (TRA).

Conventional physicochemical parameters of WWTP samples [Chemical Oxygen Demand (COD), total nitrogen (TN) as the sum of ammonium, nitrite and nitrate nitrogen, total phosphorus (TP) and dissolved organic carbon (DOC)] were determined according to standard methods indicated by the German Federal Ministry of Justice [33].

3. Results and Discussion

3.1. Occurrence and Removal of Target Analyses through Activated Sludge Treatment

Concentrations of the target analytes found in each sampling location at the investigated WWTPs are shown in Figure 2. The pharmaceuticals LDC, TRA and VEN and the metabolites ODT and ODV were detected above the LOQ in all of the influent and effluent samples from the activated sludge treatment, while MEGX, the metabolite of LDC, as expected in accordance with a previous study, was not detected in any sample. The concentrations of the investigated pharmaceuticals varied from 70 to 257 (LDC), 232 to 615 (TRA), 60 to 299 (ODT), 54 to 336 (VEN), and 235 to 723 ng L^{-1} (ODV) in the WWTP influents, whereas the concentrations in the effluent samples ranged from 55 to 183 (LDC), 88 to 416 (TRA), 50 to 245 (ODT), 22 to 176 (VEN) and 77 to 520 ng L^{-1} (ODV). Although a reduction in the concentrations of the target analytes was observed, the continuous discharge of the target analytes at these effluent concentrations into surface waters could cause adverse effects on the aquatic environment. A recent study has shown that concentrations of VEN at picogram per liter levels cause significant foot detachment from the substrate in freshwater snails, a sublethal effect that could have lethal consequences for these species [13]. Moreover, the potential toxicological effects caused by the interaction of different pharmaceuticals (among many other compounds present in wastewater effluents) cannot be discarded [34].

Due to their physiochemical characteristics (high water solubilities, low *n*-octanol/water partition coefficients and low Henry coefficients) all target analytes are expected to be found in the water phase rather than being volatilized or retained in the activated sludge [7]. Thus, elimination of the compounds achieved by activated sludge treatment corresponded to the difference between influent and effluent mass loads of the target analytes in the water phase. Removal efficiencies of the target analytes obtained by activated sludge treatment at the investigated WWTPs are presented in Table 2. The removal efficiencies of the target analytes obtained in each WWTP are difficult to compare, since the investigated WWTPs work with different operational settings and have different influent characteristics (see Table 1). The removal rates reported for the WWTP-A and WWTP-D indicate mechanical and biological treatment because the influent samples were collected before the first settling tank (at the WWTP-A) and before the screening step (at the WWTP-D). The WWTPs using

conventional activated sludge treatment, WWTP-A, WWTP-C and WWTP-D, working with different operational settings, showed maximal removal rates of 35% (LDC), 56% (TRA), 27% (ODT), 56% (VEN) and 41% (ODV). These results were consistent with the findings from a previous study showing maximal removal efficiencies of 37% (LDC), 41% (TRA), 24% (ODT), 48% (VEN) and 29% (ODV) during conventional wastewater treatment [7], confirming that the investigated pharmaceuticals could only be partially removed using mechanical and biological treatment. Increasing aerobic solid retention times (SRT) can enhance the biological degradation of various pharmaceuticals such as bezafibrat and ibuprofen [35]. A similar effect for the target analytes has not been observed in the present study.

Figure 2. Average, maximum and minimum concentrations of target analytes along the treatment process at the investigated WWTPs: (**a**) WWTP-A; (**b**) WWTP-B; (**c**) WWTP-C; (**d**) WWTP-D. Number of samples are given in parenthesis.

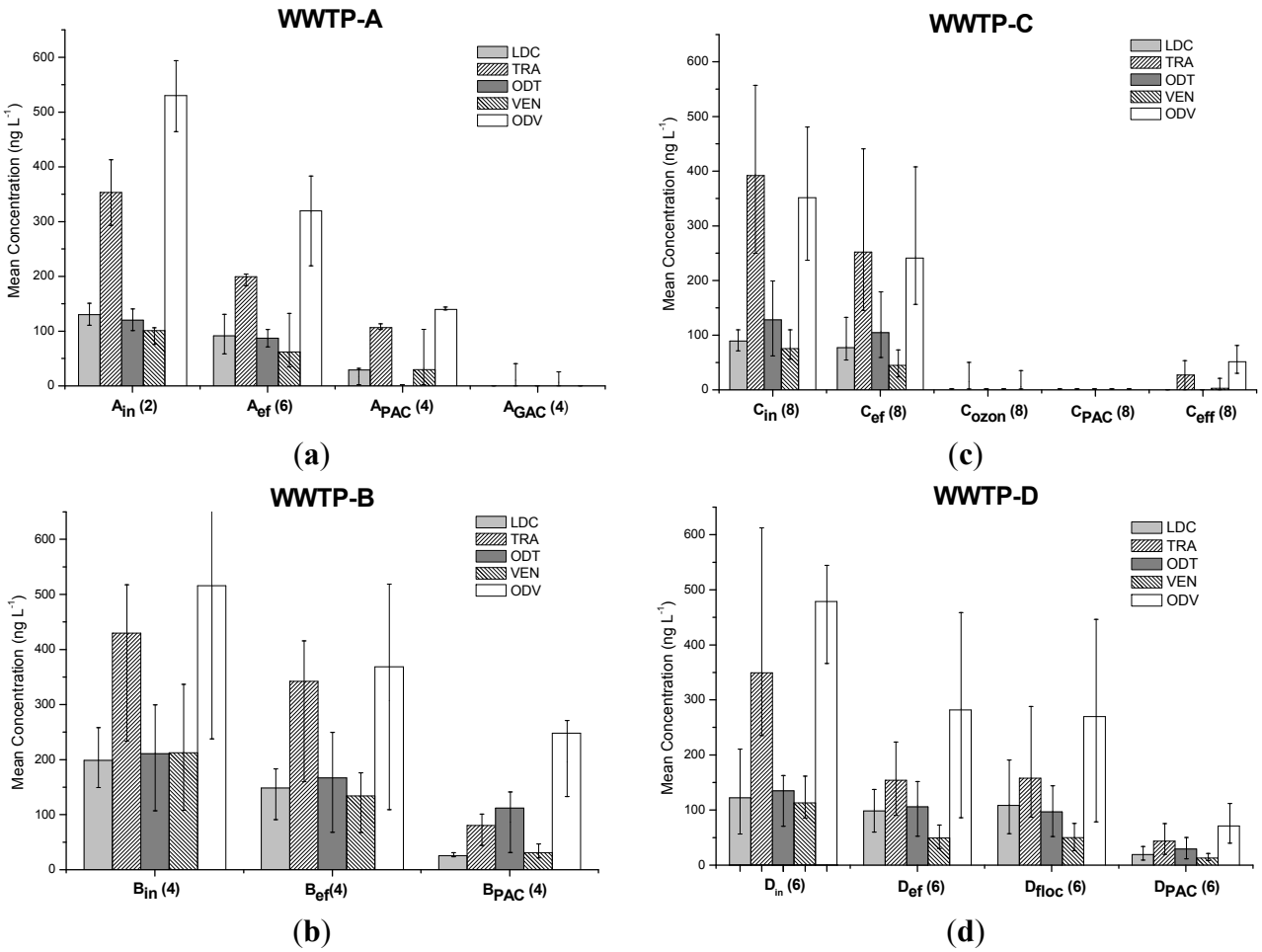

The WWTP-B uses a combination of a membrane process with a suspended growth bioreactor as the biological step. This system is actually being widely used for wastewater treatment, as it allows smaller sludge aeration basin volume, exceeds significantly the efficiency of conventional sand filtration and presents higher SRTs above the levels that can be obtained with secondary clarifiers [1,36]. However, removal efficiencies of the target compounds obtained by this treatment system were also insufficient (Table 2).

Table 2. Percentage of removal of target analytes during activated sludge treatment at the investigated WWTPs.

WWTP	% Removal				
	LDC	TRA	ODT	VEN	ODV
WWTP-A	29	43	27	40	39
WWTP-B	25	20	21	37	29
WWTP-C	14	36	17	40	31
WWTP-D	35	56	21	56	41

In activated sludge treatment, two mechanisms are considered for the removal of micropollutants from wastewater: adsorption on the sludge and degradation by microorganisms. Poor removal efficiencies of the target analytes achieved during activated sludge treatment (conventional and in a MBR) may be explained by the tendency of the compounds to remain in the water phase, which suppresses their sorption onto the sludge. Thus, the most plausible mechanism for the removal of the investigated compounds from wastewater seems to be the degradation by bacteria present in the sludge, which have been previously reported for other pharmaceuticals [37,38]. Furthermore, considering that many other compounds are also present in wastewater, some easier to degrade than others, a competition for the degradation of the compounds by the bacteria is expected to take place, thereby decreasing the removal efficiencies of the target analytes [39].

3.2. Removal of Target Analytes through Unconventional Technologies

3.2.1. Adsorption Experiments

Selected textural characteristics of the ACs used are summarized in Table 3. All three selected carbons showed similar porous features, with well-developed micro/mesoporosity as indicated by the type I/IV N_2 adsorption isotherms (data not shown). Some small differences concerning the pore volumes were observed; for instance, micropore volumes are rather close for the three activated carbons, whereas a slightly higher total pore volume was measured for PAC Norit SAE Super. It is well known that micropores are the active sites for the retention of micropollutants in both gas and liquid phase and that the transport pores (mesopores) and average particle size mainly affect the adsorption kinetics [40]. Bearing this in mind, it can be expected that these carbons would show similar adsorptive behaviors. Additionally, further characterization of the carbons confirmed that these adsorbents have a hydrophobic nature.

Table 3. Physical features of the used ACs.

Characteristics	Carbopal AP	Hydraffin XC30	Norit SAE super
Type	PAC	GAC	PAC
Avg. particle size diameter (μm)	33.6	1400	15
S_{BET} (m^2 g^{-1})	899	1036	965
V_T (cm^3 g^{-1})	0.524	0.619	0.69
W_o (cm^3 g^{-1})	0.40	0.44	0.40

S_{BET}: specific surface area evaluated from the BET equation; V_T: total pore volume evaluated at p/po 0.95; W_o: micropore volume evaluated applying the Dubinin-Radushkevich equation.

The lab-scale adsorption test data for the investigated ACs were fitted to both Freundlich and Langmuir models (Table 4), with higher correlation coefficients for the Langmuir equation. For all of the activated carbons higher adsorption capacities of LDC were obtained in comparison to TRA, which is in good agreement with the expected trend based on their chemical composition and size. No information about LDC and TRA adsorption on AC could be found in the literature for comparison. Nevertheless, more relevant to our study was the fact that the preliminary test data confirmed the adsorption of the selected micropollutants onto AC.

Table 4. Fitting parameters to the Langmuir and Freundlich models of the equilibrium adsorption isotherms (at 25 °C) of lidocaine (LDC) and tramadol (TRA) onto the activated carbons used in this study.

Activated carbon	Freundlich isotherms constants			Langmuir isotherm constants		
	K_F (mg g^{-1}/(mg L^{-1})$^{1/n}$)	1/n	r^2	q_m (mg g^{-1})	K_L (L mg^{-1})	r^2
			LDC			
Carbopal AP[a]	137	0.13	0.773	215	0.81	0.998
Hydraffin XC30-A[a]	56	0.31	0.918	196	0.17	0.997
Hydraffin XC30-B[b]	89	0.27	0.851	246	0.28	0.999
Norit SAE Super[a]	156	0.06	0.980	204	0.79	0.999
Activated carbon			**TRA**			
Carbopal AP[a]	46	0.15	0.964	84	0.36	0.995
Hydraffin XC30-A[a]	25	0.23	0.965	76	0.10	0.999
Hydraffin XC30-B[b]	29	0.23	0.948	85	0.15	0.999
Norit SAE Super[a]	61	0.08	0.987	87	0.39	0.999

[a] contact time of 72 h; [b] contact time of 120 h; Freundlich isotherm: $q_e = K_F\ (C_e)^{1/n}$; Langmuir isotherm: $q_e = (K_L \cdot q_m \cdot C_e)/(1+K_L \cdot C_e)$; q_e: amount adsorbed per unit mass of adsorbent; C_e: equilibrium concentration of compound in liquid; q_m = maximum adsorption capacity K_F: Freundlich coefficient; K_L: Langmuir coefficient.

Despite the similarities in the chemical and porous features of the carbons (Table 3), slightly higher adsorption capacities were obtained for Carbopal AP and Norit SAE Super, compared to Hydraffin XC30. This is attributed to the different adsorption kinetics as a result of the particle size diameter of the carbons. Indeed, the lab-scale adsorption tests were carried out after 72 h of contact between the carbon/solution suspensions. Under these conditions, kinetic studies (data not shown) revealed the slow uptake of the GAC system compared to PAC, thereby resulting in slightly lower adsorption capacity (lower than the theoretical expected uptake at equilibrium conditions for this carbon). This was further confirmed by the increase in the uptake (q_m parameter from Langmuir model) when the contact time is risen up to 120 h, obtaining values in agreement with the porosity of the carbons.

3.2.2. Projects PAC-MEM and GAC-columns

In the final effluent of the system PAC-MEM at the WWTP-A, the target analytes were found at mean concentrations of 30 (LDC, VEN), 106 (TRA), <LOQ (ODT) and 139 ng L^{-1} (ODV), whereas the mean concentrations found in the effluent of the system consisting of fixed-bed columns filled with GAC were below the LOQ for all of the compounds (Figure 2). The decrease in the concentrations

compared with the concentrations in the WWTP-A effluent showed the adsorption of the target analytes both onto PAC and GAC.

Removal efficiencies of the target analytes observed in both investigated systems at the WWTP-A are listed in Table 5. Higher removal efficiencies were obtained during treatment with the GAC-columns than during treatment in the PAC-MEM system. These results are in good agreement with the expectation based on the porous features (Table 3) and the lack of restricted diffusion, thus confirming the suitability of the GAC in the fixed-bed columns.

Table 5. Percentage of removal of the target analytes obtained by the unconventional treatment systems at the investigated WWTPs.

Treatment system	LDC		TRA		ODT		VEN		ODV	
	$\%R_{UP}$	$\%R_{total}$	$\%R_{UP}$	$\%R_{total}$	$\%R_{UP}$	$\%R_{total}$	$\%R_{UP}$	$\%R_{total}$	$\%R_{UP}$	$\%R_{total}$
WWTP-A										
PAC-MEM	68	77	47	70	>80	>88	51	67	56	74
GAC columns	>72	>93	>90	>97	>80	>88	>70	>90	>92	>98
WWTP-B										
PAC-in-MBR	-	87	-	81	-	47	-	85	-	52
WWTP-C										
Ozonation	>89	>91	>95	>97	>84	>87	>80	>88	>95	>97
PAC-adsorption	nc	>91	nc	>97	nc	>87	nc	>88	nc	>97
Secondary clarifier	nc	>91	nc	93	nc	>87	nc	>88	nc	85
WWTP-D										
Flocculation system	4	37	2	55	5	28	2	56	5	44
PAC-in-floc	76	84	72	88	73	79	73	87	71	85

R_{UP}: Removal efficiency of the specific unit process; R_{total}: Removal efficiency after activated sludge treatment and the respective unit process; *nc*: not calculated because of values below the LOQ in the wastewater entering the unit process. For the data below the LOQ, 0.5 × LOQ was used for the calculation of the removal efficiency.

The GAC-columns system located as a post-technology after activated sludge treatment increased significantly the removal efficiencies of the target analytes in the WWTP-A, achieving removal rates above 88% for all of the compounds. In the present work, the columns were filled with GAC about 1 month before the collection of the samples so its adsorption capacity was not yet exhausted. It can be expected that, with time, the adsorption capacity of the GAC-columns will decrease and be depleted while biological activity will be developed in the columns contributing to degradation of the compounds [41]. The use of filled GAC-columns has already been reported as an effective post-treatment technology for the removal of several pharmaceuticals. Nguyen *et al*. [42] reported removal efficiencies ≥98% for other hydrophilic pharmaceuticals such as carbamazepine and diclofenac, which during activated sludge treatment showed efficiencies below 40%.

3.2.3. Project PAC-in-MBR

With the addition of PAC into the MBR of the PAC-in-MBR system at the WWTP-B, the mean concentrations of the target analytes in the effluent were 26 (LDC), 80 (TRA), 111 (ODT), 31 (VEN) and 248 ng L^{-1} (ODV). The addition of PAC into the MBR achieved removal efficiencies of the target analytes (Table 5). A comparison of these values with the removal efficiencies obtained during activated sludge treatment at the WWTP-B (Table 2) has to be done carefully as the constant flow into the PAC-in-MBR system resulted in a flow-proportional sampling at B_{PAC}, whereas sampling at B_{in} was time-proportional and no monitoring of the daily variation of wastewater was carried out at this sampling location. The metabolites ODT and ODV appeared to be poorly adsorbed by the PAC within the MBR, since the removal efficiencies after addition of PAC were also deficient. Observing the performance of the PAC Carbopal AP in the PAC-in-MBR system and PAC-MEM system at the WWTP-A, it can be concluded that the PAC Carbopal AP is not suitable for an effective removal of the target analytes from wastewater. The lower adsorption capacities obtained for LDC and TRA in the lab-scale experiments (Table 4) also support this finding, and suggest that such poor performance of the AC might be related to hindered accessibility of these compounds in microporous ACs. This statement remains an assumption as no operating settings were tested to optimize the performance of both systems at WWTP-A and WWTP-B. Other authors reported satisfactory results in the removal process of the persistent hydrophilic pharmaceuticals carbamazepine and sulfamethoxazole by simultaneous PAC adsorption within a MBR [18]. However, little information about the chemical composition and the micro/mesoporosity of therein used PAC is provided. A study of the Ministry for Climate Protection, Environment, Agriculture, Nature Conservation and Consumer Protection of the German State of North Rhine-Westphalia [43] reported high removal efficiencies of sulfamethoxazole from wastewater using Carbopal AP as adsorbent. Thus, the PAC-in-MBR technology and the use of Carbopal AP at the WWTP-B are not discarded for an effective removal of the target analytes and argue for further investigation.

3.2.4. Project Ozonation Followed by PAC-Adsorption

The samples collected after the ozonation step at the WWTP-C showed mean concentrations below the LOQ for all of the target analytes (Figure 2). Thus, for a dosage of 0.6 mg O_3 per liter of wastewater (≈0.1 mg O_3 mg^{-1} DOC during sample collection) and a contact time of 54 min, removal rates greater than 89% (LDC), 95% (TRA), 84% (ODT), 80% (VEN) and 95% (ODV) were calculated, presenting the ozonation as an effective step for removal of the selected compounds from wastewater after activated sludge treatment (Table 5). Removal efficiencies of LDC, VEN and ODV during ozonation were consistent with recently conducted studies. Hollender *et al.* [14] reported elimination rates of 98%, 99% and 96% for LDC, VEN and ODV, respectively, for a dosage of 0.6 mg O_3 mg^{-1} DOC and a contact time of about 9 min. An ozonation stage with a dosage of 0.5 mg O_3 mg^{-1} DOC and a contact time of 15 min showed removal rates of about 88% for both TRA and VEN [29]. The good removal efficiencies obtained by the ozonation at the WWTP-C with low ozone dosage relative to the DOC content was due to the long contact time (54 min).

Parallel to the beneficial effects of oxidation of the target compounds, the use of ozonation can cause the formation of undesired by-products through the reaction of ozone and OH radicals with different compounds present in wastewater. As biological treatment technologies have been reported as an effective tool for the removal of organic by-products [14,44], it is assumed that the recirculation of the effluent of the PAC-adsorption system at the WWTP-C to the aeration tank contribute to the degradation of eventually formed organic by-products.

No target compounds were detected in effluent samples from the PAC-adsorption system at the WWTP-C. Because the concentrations of the target analytes after ozonation were below the LOQs, removal efficiencies at the PAC-adsorption system could not be calculated. Although at the WWTP-C the implementation of a PAC-adsorption system after ozonation for the removal of the target analytes appears to be unnecessary, Reungoat *et al*. [29] highlighted the importance of a post-filtration with AC, in order to achieve total removal of different micropollutants and non-target compounds including transformation products. Additional to the removal of several compounds, the use of ozone in wastewater treatment provides disinfection, viral inactivation and sterilization of the final effluent [14].

The concentrations of the target analytes found in the effluent samples from the secondary clarifier containing wastewater treated by the ozonation and the PAC-adsorption systems were <LOQ (LDC, ODT and VEN), 27 (TRA) and 51 ng L^{-1} (ODV). The increment in the concentrations was due to the continuous entry of fresh wastewater influent to the aeration tank.

3.2.5. Project PAC-in-floc

The effluent samples from the flocculation filter chamber operated with PAC presented mean concentrations of 19 (LDC), 44 (TRA), <LOQ for ODT and VEN, and 71 ng L^{-1} (ODV), which are significantly lower than the concentrations found in the effluent samples from the filter chamber operated without PAC [108 (LDC), 157 (TRA), 97 (ODT), 50 (VEN) and 270 ng L^{-1} (ODV)] (Figure 2). Acceptable removal efficiencies were observed through the addition of PAC which increase the total removal of the target analytes at the WWTP-D. As expected due to the hydrophilic character of the target analytes, no significant elimination of these micropollutants was observed by the flocculation process at the WWTP-D (Table 5).

3.2.6. Mechanisms for Adsorption onto AC and Ozonation

The concentrations of the target analytes found in influent and effluent samples from the treatment systems at WWTP-A, WWTP-B and WWTP-D demonstrated the adsorption of the compounds onto the AC. Due to the moderately alkaline or alkaline character of the target analytes [pK_a values of 8.01 (LDC, [45]), 9.13 (TRA, [46]), 9.12 (ODT, [46]), 9.4 (VEN, [47]) and 14.46 (ODV, [48])], and the amino groups in their structures which under neutral conditions will be protonated forming cations [49], electrostatic interactions between the cations and the AC are expected to occur. However, due to the hydrophobic nature (basic character) of the ACs used, at neutral conditions their surface is expected to be neutral or slightly positive charged, for which electrostatic interactions (attractive) between the pollutants and the ACs are not expected to be the main driving force controlling the uptake on all three studied ACs [50]. Thus, the uptake strongly depends on the nature of the pollutant (*i.e.*, boiling point, molecular size, solubility).

The ozonation step investigated at the WWTP-C showed good removal efficiencies for all of the target compounds. Considering that the ozonation process is dependent on the functional groups and that ozone reacts relatively fast with compounds containing an activated aromatic moiety, double bonds or amino groups [16], the removal of the target analytes during ozonation at the WWTP-C is explained by the tertiary amino groups present in their chemical structures.

3.3. Evaluation of other Parameters Relevant to the Wastewater Treatment

Parallel to the removal of the target analytes, the implications of using AC and ozonation technologies on different performance parameters of the WWTP were analyzed. Concentrations of the parameters COD, TN, TP and DOC measured at the sampling locations at WWTP-B, WWTP-C and WWTP-D are represented in Figure 3. Due to technical difficulties at some sampling dates, statistical values of COD and TP could not be calculated at WWTP-B and WWTP-D, respectively. DOC concentrations were measured only at sampling locations at WWTP-D. Unfortunately, performance parameters could not be measured during the WWTP-A sampling. The mean COD concentrations found in samples at C_{eff} and D_{PAC} (10 and 7 mg L^{-1}) were lower than the mean COD concentrations measured at C_{ef} and D_{floc} (15 and 10 mg L^{-1}). This indicates that the addition of PAC to nitrification step of the aeration tank at the WWTP-C and to the flocculation filter chamber at WWTP-D enhance the COD removal process, and thus the overall removal of organic compounds at the WWTP. This affirmation can be confirmed by the mean DOC concentrations measured at D_{floc} and D_{PAC} ($[DOC]_{Dfloc}$ = 5 mg L^{-1} > $[DOC]_{DPAC}$ = 3 mg L^{-1}).

Mean TN concentrations measured in samples from B_{PAC} (5 mg L^{-1}) and C_{eff} (6 mg L^{-1}) were lower than the mean TN concentrations in samples from B_{ef} (7 mg L^{-1}) and C_{ef} (8 mg L^{-1}). The results showed that the addition of PAC to activated sludge processes increase the N removal at WWTP-B and WWTP-C. The nitrification enhancement is probably due to retention onto PAC of inhibitory compounds of the nitrification processes [51]. As expected due to the absence of growing bacteria in the flocculation chambers, no N removal was observed by addition of PAC to the flocculation chamber.

TP concentrations in the samples from B_{ef} and B_{PAC} varied so that it was not possible to establish any tendency at the PAC-in-MBR system at the WWTP-B. A slight decrease of the TP concentrations at the WWTP-C by addition of PAC to the activated sludge process was observed ($[TP]_{Cef}$=0.6 mg L^{-1} > $[TP]_{Ceff}$=0.4 mg L^{-1}). An increase in phosphorus removal efficiencies using AC in activated sludge systems were reported by Serrano *et al*. [52].

The concentrations of the performance parameters measured in the final effluents after the treatment projects at WWTP-B, WWTP-C and WWTP-D were far below the threshold values established by the German Federal Ministry of Justice [33] for discharges from WWTPs magnitude 4 (WWTP-B and WWTP-C; 90 (COD), 18 (TN) and 2 mg L^{-1} (TP)) and magnitude 5 [WWTP-D; 75 (COD), 13 (TN) and 1 mg L^{-1} (TP)].

Figure 3. Average concentrations and standard deviations (**a**) Chemical Oxygen Demand (COD); (**b**) total nitrogen (TN); (**c**) total phosphorus (TP); and (**d**) dissolved organic carbon (DOC) measured during sampling at WWTP-B, WWTP-C and WWTP-D. Threshold values of each parameter according the WWTP characteristics are indicated with a line [33].

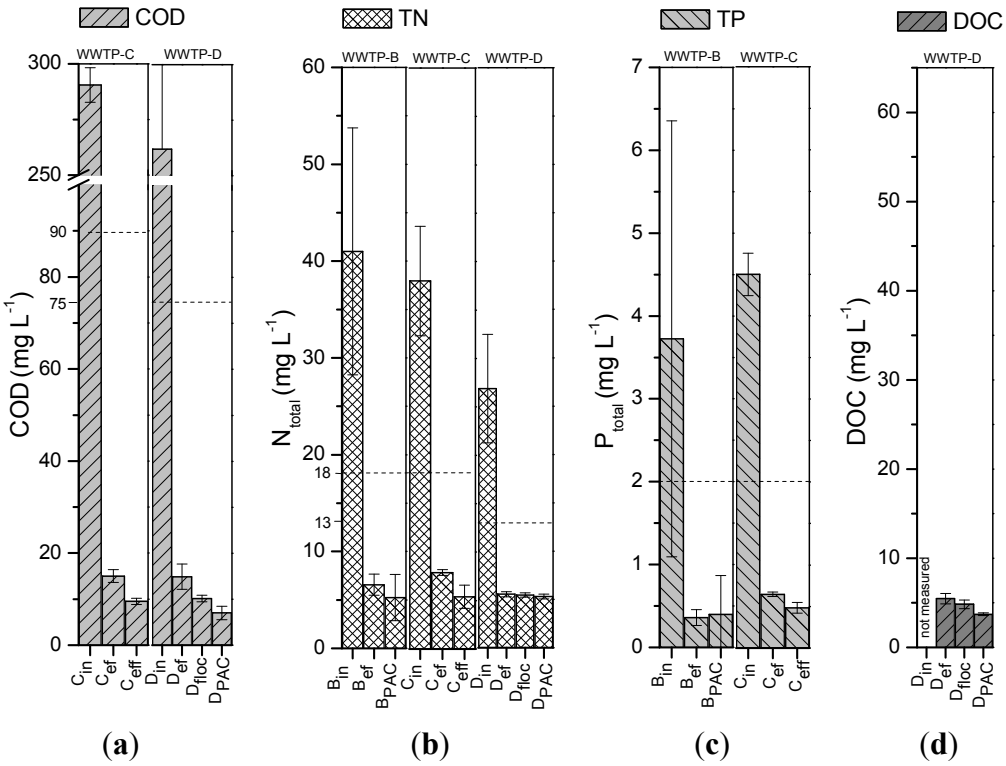

4. Conclusions

Different treatment systems including adsorption onto PAC/GAC and ozonation were demonstrated as viable post-treatment technologies in order to enhance the removal efficiencies of LDC, TRA, VEN and the metabolites ODT and ODV from biologically treated wastewater at a WWTP. Lab-scale adsorption tests on the selected carbon adsorbents showed high removal efficiencies for LDC as opposed to TRA, indicating that the overall uptake is governed by several factors: the affinity of the pollutant towards the aqueous solution, the structural shape of the pollutants, and the adsorbent particle size. The removal of the target analytes using AC was explained based on their chemical nature, and obtained data show their adequateness to be used in post-treatments for upgrading WWTPs. In the case of ozonation, the removal efficiency seems to be related to the presence of tertiary amino groups in the chemical structure of the micropollutants. Taking into account that the concentrations of the target analytes in the WWTP effluents are diluted to a great extent when they are discharged into surface waters, it can be expected, according to the removal efficiencies obtained in this study, that the concentrations of the pharmaceuticals and their metabolites will be below the LOQs at the discharge points of WWTPs upgraded with unconventional technologies. The addition of PAC to activated sludge processes appears to improve other water quality parameters such as TN and COD.

Parallel to the removal of micropollutants, different aspects such as waste production, electricity consumption and operation costs will have to be discussed for the implementation of AC and ozonation technologies at large-scale in WWTPs. Moreover, the formation of by-products has to be considered in case of ozonation.

Acknowledgments

The first author would like to thank the Catholic Academic Exchange Service (KAAD) for financial support. The support of colleagues and staff of the Institute of Atmospheric and Environmental Sciences at the Goethe University Frankfurt am Main and of the Instituto Nacional del Carbon in Oviedo is gratefully acknowledged. Projects in Schwerte and Wuppertal are financial supported by the Ministry for Climate Protection, Environment, Agriculture, Nature Conservation and Consumer Protection of the German State of North Rhine-Westphalia. Thanks are due to Gregor Lorenz and Dieter Thöle from the Ruhrverband, Jochen Herr from the RWTH Aachen University, Peter Cornel and Gregor Knopp from Institut IWAR at the Technische Universität Damstadt, Helmut Volpert and Stefan Hoffmann from the Abwasserverband Langen-Egelsbach-Erzhausen and Catrin Bornemann from the Wupperverband, for sampling and for their assistance in questions about technical characteristics of the investigated WWTPs. COA thanks MICINN for financial support (grant CTM2008-01956). Thanks go to German Academic Exchange Service (DAAD) for covering traveling costs within the project PPP-Spain.

References

1. Clara, M.; Strenn, M.; Gans, O.; Martinez, E.; Kreuzinger, N.; Kroiss, H. Removal of selected pharmaceuticals, fragrances and endocrine disrupting compounds in a membrane bioreactor and conventional wastewater treatment plants. *Water Res.* **2005**, *39*, 4797–4807.
2. Smook, T.M.; Zho, H.; Zytner, R.G. Removal of ibuprofen from wastewater: Comparing biodegradation in conventional, membrane bioreactor, and biological nutrient removal treatment systems. *Water Sci. Technol.* **2008**, *57*, 1–8.
3. Gros, M.; Petrović, M.; Barceló, D. Wastewater treatment plants as a pathway for aquatic contamination by pharmaceuticals in the Ebro River Basin (Northeast Spain). *Environ. Toxicol.Chem.* **2007**, *26*, 1553–1562.
4. Kasprzyk-Hordern, B.; Dinsdale, R.M.; Guwy, A.J. The removal of pharmaceuticals, personal care products, endocrine disruptors and illicit drugs during wastewater treatment and its impact on the quality of receiving waters. *Water Res.* **2009**, *43*, 363–380.
5. Palmer, P.M.; Wilson, L.R.; O'Keefe, P.; Sheridan, R.; King, T.; Chen, C.-Y. Sources of pharmaceutical pollution in the New York City watershed. *Sci. Total Environ.* **2008**, *394*, 90–102.
6. Metcalfe, C.D.; Chu, S.; Judt, C.; Li, H.; Oakes, K.D.; Servos, M.; Andrews, D.M. Antidepressants and their metabolites in municipal wastewater, and downstream exposure in an urban watershed. *Environ. Toxicol. Chem.* **2010**, *29*, 79–89.
7. Rúa-Gómez, P.; Püttmann, W. Occurrence and removal of lidocaine, tramadol, venlafaxine and their metabolites in German wastewater treatment plants. *Environ. Sci. Pollut. Res.* **2012**, *19*, 689–699.

8. Kasprzyk-Hordern, B.; Dinsdale, R.M.; Guwy, A.J. The ocurrence of pharmaceuticals, personal care products, endocrine disruptors and illicit drugs in surface water in South Wales. *Water Res.* **2008**, *42*, 3498–3518.
9. Peng, X.; Yu, Y.; Tang, C.; Tan, J.; Huang, Q.; Wang, Z. Occurrence of steroid estrogens, endocrine-disrupting phenols, and acid pharmaceutical residues in urban riverine water of the Pearl River Delta, South China. *Sci. Total Environ.* **2008**, *397*, 158–166.
10. Tixier, C.; Singer, H.P.; Oellers, S.; Müller, S. Occurrence and fate of carbamazepine, clofibric acid, diclofenac, ibuprofen, ketoprofen, and naproxen in surface waters. *Environ. Sci. Technol.* **2003**, *37*, 1061–1068.
11. Nentwig, G.; Oetken, O.; Oehlmann, J. Effects of pharmaceuticals on aquatic invertebrates—The example of carbamazepine and clofibric acid. In *Pharmaceuticals in the Environment, Sources, Fate, Effects and Risks*, 2nd ed.; Kümmerer, K., Ed.; Springer-Verlag: Berlin, Germany, 2004; pp. 195–207.
12. Schulte-Oehlmann, U.; Oetken, M.; Bachmann, J.; Oehlmann, J. Effects of ethinyloestradiol and methyltestosterone in prosobranch snails. In *Pharmaceuticals in the Environment, Sources, Fate, Effects and Risks*, 2nd ed.; Kümmerer, K., Ed.; Springer-Verlag: Berlin, Germany, 2004; pp. 233–247.
13. Fong, P.P.; Hoy, C.M. Antidepressants (venlafaxine and citalopram) cause foot detachment from the substrate in freshwater snails at environmentally relevant concentrations. *Mar. Freshw. Behav. Phy.* **2012**, *45*, 145–153.
14. Hollender, J.; Zimmermann, S.G.; Koepke, S.; Krauss, M.; Mcardell, C.S.; Ort, C.; Singer, H.; von Gunten, U.; Siegrist, H. Elimination of organic micropollutants in a municipal wastewater treatment plant upgraded with a full-scale post-ozonation followed by sand filtration. *Environ. Sci. Technol.* **2009**, *43*, 7862–7869.
15. Huber, M.M.; Göbel, A.; Joss, A.; Herrmann, N.; Löffler, D.; MCardell, C.S.; Ried, A.; Siegrist, H.; Ternes, T.A.; von Gunten, U. Oxidation of pharmaceuticals during ozonation of municipal wastewater effluents: A pilot study. *Environ. Sci. Technol.* **2005**, *39*, 4290–4299.
16. Von Gunten, U. Ozonation of drinking water: Part I. Oxidation kinetics and product formation. *Water Res.* **2003**, *37*, 1443–1467.
17. Dosoretz, C.G.; Böddeker, K. Removal of trace organics from water using a pumped bed-membrane bioreactor with powdered activated carbon. *J. Memb. Sci.* **2004**, *239*, 81–90.
18. Li, X.; Hai, F.I.; Nghiem, L.D. Simultaneous activated carbon adsorption within a membrane bioreactor for an enhanced micropollutant removal. *Bioresour. Technol.* **2011**, *102*, 5319–5324.
19. Ternes, T.A.; Joss, A. *Human Pharmaceuticals, Hormones and Fragrances: The Challenge of Micropollutants in Urban Water Management*; IWA Publishing: London, UK, 2006.
20. Bandosz, T.J. Activated carbon surfaces in environmental remediation. In *Interface Science and Technology*; Elservier: Amsterdam, The Netherlands, 2006; Volume 7.
21. Kim, S.H.; Shon, H.K.; Ngo, H.H. Adsorption characteristics of antibiotics trimethoprim on powdered and granular activated carbon. *J. Ind. Eng. Chem.* **2010**, *16*, 344–349.
22. Ternes, T.A.; Meisenheimer, M.; Mcdowell, D.; Sacher, F.; Brauch, H.J.; Haist-Gulde, B.; Preuss, G.; Wilme, U.; Zulei-Seibert, N. Removal of pharmaceuticals during drinking water treatment. *Environ. Sci. Technol.* **2002**, *36*, 3855–3863.

23. Westerhoff, P.; Yoon, Y.; Snyder, S.; Wert, E. Fate of endocrine-disruptor, pharmaceutical, and personal care product chemicals during simulated drinking water treatment processes. *Environ. Sci. Technol.* **2005**, *39*, 6649–6663.
24. Carvalho, A.P.; Mestre, A.S.; Haro, M.; Ania, C.O. Advanced Methods for the removal of acetaminophen from water. In *Acetaminophen, properties, clinical uses and adverse effects*; Javaherian, A., Latifpour, P., Eds.; Nova Science Publishers Inc.: Hauppauge, New York, NY, USA, 2012.
25. Ania, C.O.; Pelayo, J.G.; Bandosz, T.J. Reactive adsorption of penicillin in activated carbons. *Adsorption* **2011**, *17*, 421–429.
26. Rúa-Gómez, P.C.; Püttmann, W. Impact of wastewater treatment plant discharge of lidocaine, tramadol, venlafaxine and their metabolites on the quality of surface waters and groundwater. *J. Environ. Monitor.* **2012**, *14*, 1391–1399.
27. Lajaunesse, A.; Gagnon, C.; Sauvé, S. Determination of basic antidepressants and their *n*-desmethyl metabolites in raw sewage and wastewater using solid phase extraction and liquid chromatography-tandem mass spectrometry. *Anal. Chem.* **2008**, *80*, 5325–5333.
28. Schultz, M.M.; Furlong, E.T.; Kolpin, D.W.; Werner, S.L.; Schoenfuss, H.L.; Barber, L.B.; Blazer, V.S.; Norris, D.O.; Vadja, A.M. Antidepressant pharmaceuticals in two U.S. effluent-impacted streams: occurrence and fate in water and sediment, and selective uptake in fish neural tissue. *Environ. Sci. Technol.* **2010**, *44*, 1918–1925.
29. Reungoat, J.; Macova, M.; Escher, B.I.; Carswell, S.; Mueller, J.F.; Keller, J. Removal of micropollutants and reduction of biological activity in a full scale reclamation plant using ozonation and activated carbon filtration. *Water Res.* **2010**, *44*, 625–637.
30. Lee, C.O.; Howe, K.J.; Thomson, B.M. Ozone and biofiltration as an alternative to reverse osmosis for removing PPCPs and micropollutants from treated wastewater. *Water Res.* **2012**, *46*, 1005–1014.
31. Dubinin, M.M. Microporous structures of carbonaceous adsorbents. In *Characterization of Porous Solids*; Greeg, S.J., Sing, K.S.W., Stoecki, H.F., Eds.; Society of Chemical Industry: London, UK, 1979.
32. German Institute for Standardization. *Limits of Detection, Identification and Quantitation* (in German); DIN 32645; German Institute for Standardization: Berlin, Germany, 1994.
33. German Federal Ministry of Justice. *Regulation on Requirements for the Discharge of Wastewater into Surface Waters* (in German); German Federal Ministry of Justice: Berlin, Germany, 1997.
34. Cleuvers, M. Mixture toxicity of the anti-inflammatory drugs diclofenac, ibuprofen, naproxen, and acetylsalicylic acid. *Ecotoxicol. Environ. Saf.* **2004**, *59*, 309–315.
35. Siegrist, H.; Joss, A.; Alder, A.; Gobel, A.; Keller, E.; McArdell, C.; Ternes, T.A. Micropollutants—New requirements for wastewater treatment (in German). *EAWAG News* **2003**, *57*, 7–10.
36. Larsen, T.A.; Lienert, J.; Joss, A.; Siegrist, H. How to avoid pharmaceuticals in the aquatic environment. *J. Biotechnol.* **2004**, *113*, 295–304.
37. Jones, O.A.H.; Voulvoulis, N.; Lester, J.N. The occurrence and removal of selected pharmaceutical compounds in a sewage treatment works utilising activated sludge treatment. *Environ. Pollut.* **2007**, *145*, 738–744.

38. Gomez, M.J.; Bueno, M.J.M.; Lacorte, S.; Fernandez-Alba, A.R.; Aguera, A. Pilot survey monitoring pharmaceuticals and related compounds in a sewage treatment plant located on the Mediterranean coast. *Chemosphere* **2007**, *66*, 993–1002.
39. Wang, L.; Govind, R. Sorption of toxic organic compounds on wastewater solids: Mechanism and modeling. *Environ. Sci. Technol.* **1993**, *27*, 152–158.
40. Ania, C.O.; Bandosz, T.J. Importance of structural and chemical heterogeneity of activated carbon surfaces for adsorption of dibenzothiophene. *Langmuir* **2005**, *21*, 7752–7759.
41. Pipe-Martin, C.; Reungoat, J.; Keller, J. *Dissolved Organic Carbon Removal by Biological Treatment*; CRC for Water Quality Research Australia: Adelaide, Australia, 2010.
42. Nguyen, L.N.; Hai, F.I.; Kang, J.; Price, W.E.; Nghiem, L.D. Removal of trace organic contaminants by a membrane bioreactor-granular activated carbon (MBR-GAC) system. *Bioresour. Technol.* **2011**, *113*, 169–173.
43. Grünebaum, T. *Final Report Phase 1: Elimination of Drug Residues in Sewage Treatment Plant*s (in German); Ministry for Climate Protection, Environment, Agriculture, Nature Conservation and Consumer Protection of the German State of North Rhine-Westphalia: Düsseldorf, Germany, 2011.
44. Schmidt, C.K.; Brauch, H.-J. N,N-dimethylsulfamide as precursor for N-nitrosodimethylamine (NDMA) formation upon ozonation and its fate during drinking water treatment. *Environ. Sci. Technol.* **2008**, *42*, 6340–6346.
45. SRC PhysProp Database. Available online: http://www.syrres.com/what-we-do/databaseforms.aspx?id=386 (accessed on 3 September 2012).
46. Tzvetkov, M.V.; Saadatmand, A.R.; Lötsch, J.; Tegeder, I.; Stingl, J.C.; Brockmöller, J. Genetically polymorphic OCT1: Another piece in the puzzle of the variable pharmacokinetics and pharmacodynamics of the opioidergic drug tramadol. *Clin. Pharmacol. Ther.* **2011**, *90*, 143–150.
47. Ellingrod, V.L.; Perry, P.J. Venlafaxine: A heterocyclic antidepressant. *Am. J. Hosp. Pharm.* **1994**, *51*, 3033–3046.
48. *Molconvert*, version 5.8.2; Molecule File Conversion with MolConverter; ChemAxon: Budapest, Hungary, 2012.
49. Babić, S.; Horvat, A.J.M.; Pavlović, D.M.; Kaštelan-Macan, M. Determination of pKa values of active pharmaceutical ingredients. *Trends Anal. Chem.* **2007**, *26*, 1043–1061.
50. Cabrita, I.; Ruiz, B.; Mestre, A.S.; Fonseca, I.M.; Carvalho, A.P.; Ania, C.O. Removal of an analgesic using activated carbons prepared from urban and industrial residues. *Chem. Eng. J.* **2010**, *163*, 249–255.
51. Ng, A.S.; Stenstrom, M.K. Nitrification in powdered activated carbon-activated sludge process. *J. Environ. Eng.* **1987**, *113*, 1285–1301.
52. Serrano, D.; Suárez, S.; Lema, J.M.; Omil, F. Removal of persistent pharmaceutical micropollutants from sewage by addition of PAC in a sequential membrane bioreactor. *Water Res.* **2011**, *45*, 5323–5333.