sustainability

MDPI

Article

Energy-Efficient Hydraulics in Heavy Machinery: Technologies, Challenges, and Future Directions

Mohit Bhola *,† and Gyan Wrat *,†

Department of Energy Technology, AAU Energy, Aalborg University, 9220 Aalborg, Denmark
* Correspondence: mohitbhola.90@gmail.com or mobh@energy.aau.dk (M.B.); gyan007wart@gmail.com or gywr@energy.aau.dk (G.W.)
† These authors contributed equally to this work.

Abstract

Heavy earth-moving machinery is essential for construction, mining, and infrastructure development, but its traditional hydraulic systems, powered by diesel engines, are major contributors to energy losses and inefficiencies. Hydraulic circuits typically account for significant parasitic losses due to throttling, leakage, and low energy recovery, resulting in high fuel consumption and emissions. Recent innovations are transforming hydraulic technology to improve energy efficiency and sustainability. This review highlights advancements such as electro-hydraulic actuators, independent metering systems, and digital hydraulics, which enable precise flow control and minimize throttling losses. The integration of energy recovery systems, including hydraulic accumulators and hybrid architectures, further enhances efficiency by capturing and reusing energy during braking and lowering operations. Additionally, the adoption of smart sensors, predictive analytics, and advanced control algorithms enables real-time optimization of hydraulic performance, reducing idle losses and improving overall system responsiveness. Emerging trends such as fluid power electrification, compact high-pressure components, and the use of eco-friendly hydraulic fluids are also discussed. By synthesizing current research and industrial practices, this paper provides insights into the challenges, opportunities, and future prospects for achieving substantial energy efficiency gains through next-generation hydraulic technologies in heavy earth-moving equipment.

Keywords: hydraulic systems; energy efficiency; electro-hydraulic actuators; digital hydraulics; energy recovery; heavy earth-moving machinery

Check for updates

Academic Editors: Ayman Al-Quraan, Ahmed Koran and Ashraf Ghassab Radaideh

Received: 17 October 2025
Revised: 15 December 2025
Accepted: 24 December 2025
Published: 27 December 2025

Copyright: © 2025 by the authors. Licensee MDPI, Basel, Switzerland. This article is an open access article distributed under the terms and conditions of the Creative Commons Attribution (CC BY) license.

1. Introduction

Heavy earth-moving equipment—such as excavators, loaders, and bulldozers—relies extensively on hydraulic systems to convert engine power (in most of the systems) into mechanical motion. However, conventional hydraulic architectures are inherently inefficient, with studies indicating that 30–50% of input energy is lost through throttling, leakage, and parasitic flows in hydraulic circuits [1]. These inefficiencies not only increase fuel consumption but also elevate greenhouse gas emissions and operating costs, posing significant challenges in meeting stringent environmental regulations.

Recent advancements are driving a paradigm shift toward next-generation hydraulic technologies aimed at improving energy efficiency. Key innovations include electro-hydraulic actuation, which combines electric drives with hydraulic power for precise control and reduced throttling losses, and energy recovery systems that capture and reuse

energy during braking or lowering operations [2–4]. Additionally, digital hydraulics and smart control algorithms enable real-time optimization of flow and pressure, minimizing idle losses and enhancing system responsiveness [5]. Complementary developments such as advanced hydraulic fluids with low-viscosity variability and high oxidation resistance further reduce mechanical and volumetric losses, improving overall system performance [6,7].

This review discusses recent system-level technologies developed in both research laboratories and industry, along with the challenges associated with these systems. In Section 2, the inefficiencies of traditional hydraulic systems are discussed. Section 3 presents innovations in hydraulic systems, focusing on linear actuators such as electro-hydraulic actuators (EHAs) and independent metering systems (IMSs). Section 4 covers innovative hydraulic circuits used for energy recovery and hybridization. In Section 5, the role of advanced sensors and predictive algorithms in improving hydraulic system performance and reliability is discussed. Section 6 provides a quantitative comparison of emerging actuation and transmission technologies. Section 7 highlights recent developments and innovations in fluid power and hydraulic technologies. Section 8 examines current limitations in hydraulic systems and outlines potential directions for future research and improvements. Finally, Section 9 summarizes the key findings of the study and their implications for hydraulic system design and efficiency.

2. Inefficiencies in Traditional Hydraulic Systems

Compared with other systems as electrical and mechanical systems, hydraulic systems show low efficiency and can be energy inefficient due to various losses. The typical efficiency for a hydraulic motor or pump is up to 85%, but it is about 98% for a single mechanical gearbox, and it is above 95% for a triple-reduction gearbox. For a simple pump-controlled hydraulic system, the overall efficiency is about 70% under ideal operating conditions [8]. The various losses mainly include throttling loss, overflowing loss, and leakage loss, and thus energy saving has become an important research topic in the hydraulics field to lower energy consumption and emissions [9,10]. Many energy-saving techniques have been proposed and developed by many researchers, such as load-sensing control [11], positive and negative flow control systems [12], high-speed inlet valves[13], hydraulic capacity speed governing systems, separate controllers for actuator ports, and secondary regulation techniques [14]. The energy loss distribution in traditional hydraulic systems is presented in Table 1. The primary inefficiencies include

- Throttling losses: A major source of energy waste is control valves, where excess flow is throttled to regulate actuator speed, leading to substantial pressure drops and heat generation [15].
- Leakage: Internal leakage within pumps, motors, and actuators reduces volumetric efficiency and increases energy demand [16].
- Idle losses: Even during standby or low load conditions, pumps continue to circulate fluid, consuming energy without performing useful work [17].
- Low energy recovery: Potential energy during braking or lowering operations is typically dissipated as heat rather than being recovered and reused [18].

Table 1. Energy loss distribution in traditional hydraulic systems.

Loss Mechanism	Approx. Contribution (%)	Reference
Throttling losses	25–30%	[15,19,20]
Pump/motor inefficiency	15–20%	[20,21]
Leakage losses	10–15%	[15,21]
Idle losses	20–25%	[20,22]
Other (friction, etc.)	5–10%	[21,22]

3. Technological Innovations in Hydraulic Systems Targeting Throttling Losses

Technological innovations in hydraulic systems have significantly advanced performance, efficiency, and sustainability. electro-hydraulic actuators (EHAs), which integrate electric motors with hydraulic pumps, offer high energy efficiency and dynamic response by eliminating complex valve systems and reducing energy losses—achieving up to 54% lower energy consumption compared to traditional systems [23]. Independent metering systems (IMSs) decouple the meter-in and meter-out functions, allowing precise control of each actuator port. This reduces throttling losses and improves energy efficiency, particularly in heavy-duty mobile machinery [22,24,25].

3.1. Electro-Hydraulic Actuators (EHAs)

An electro-hydraulic actuator (EHA) is a compact, self-contained actuation system that integrates an electric motor (serving as the prime mover), a hydraulic pump (either fixed or variable displacement), a hydraulic cylinder, and advanced control electronics with sensors. A typical EHA schematic is shown in Figure 1. The schematics of the open-circuit and closed-circuit electro-hydraulic actuator (EHA) layouts, inspired by the work of Qu et al. [3], are presented in Figure 2.

Unlike traditional centralized hydraulic systems, EHAs integrate the electric motor and hydraulic pump into a compact unit, eliminating long hoses and reducing energy losses, leakage, and maintenance. They generate pressure only when needed, minimizing idle losses, and often support energy recovery via accumulators or batteries. With closed-loop servo control, EHAs offer precise positioning and fast dynamic response, ideal for high-performance applications. In the study by MOOG [26], the authors stated that the natural frequency of the EHA is in the range of 30–50 Hz and is sufficient for many industrial applications. Research has been conducted on a hydraulic press for deep die operation where four separate EHAs were used and installed at four separate cushions of the machine. During deep drawing operation, energy was recovered from the die cushion machine to the ram actuator, which shows the energy recovery potential of EHAs. EHAs have been shown to save around 29% of energy in hydraulic deep drawing operation. The schematic representation of the electro-hydraulic actuator (EHA) layout for hydraulic press operation is shown in Figure 3.

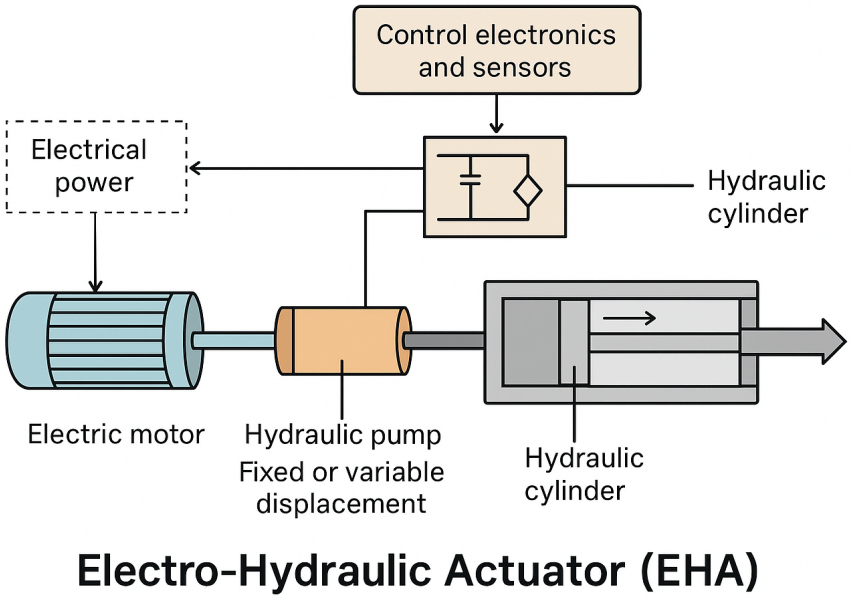

Figure 1. Illustrative schematic of electro-hydraulic actuator (EHA) layout.

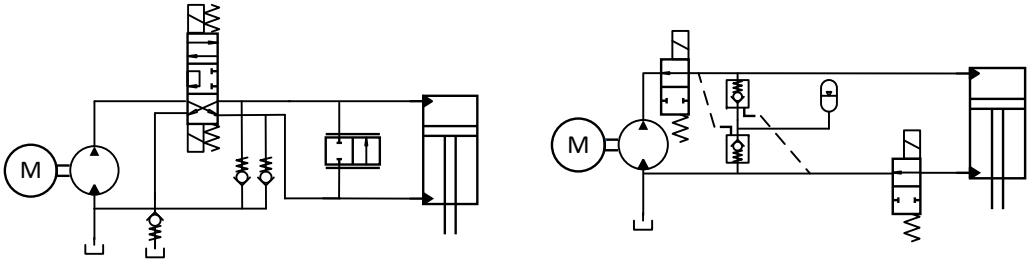

(**a**) Open-circuit EHA (**b**) Closed-circuit EHA

Figure 2. Schematics of electro-hydraulic actuator (EHA) layouts. Images inspired by work performed by Qu et al. [3].

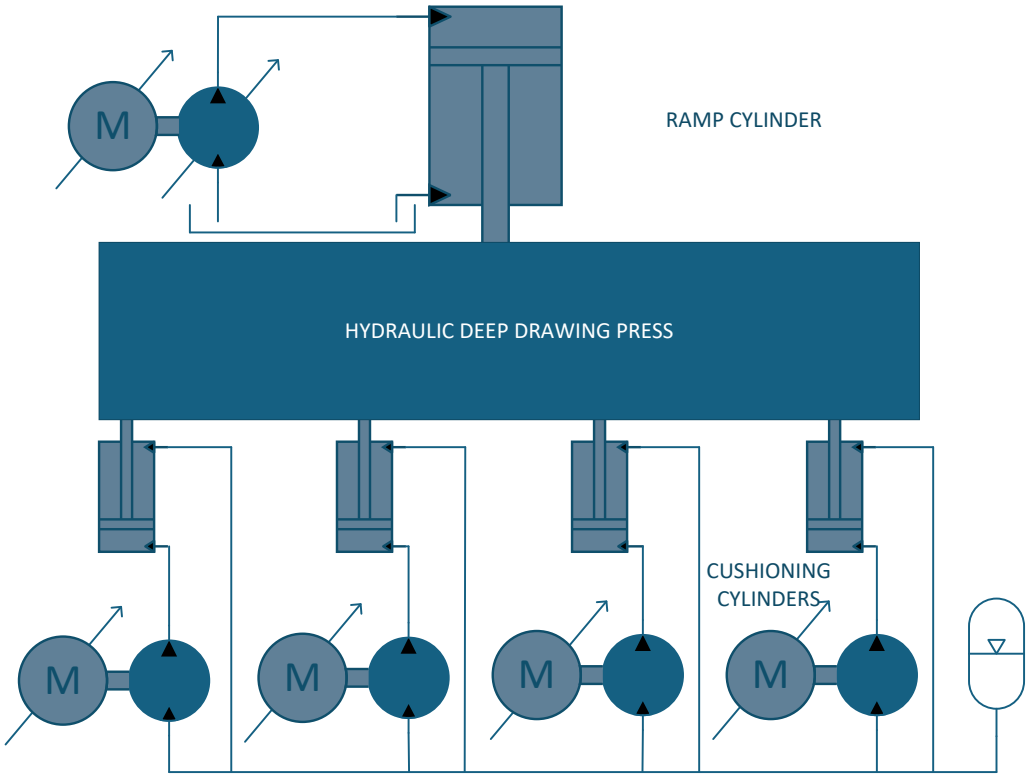

Figure 3. Represented schematic of electro-hydraulic actuator (EHA) layout for hydraulic press operation [26].

Building upon the system architecture, recent research efforts have focused on experimental validation, modeling, and optimization of EHA performance in various loading and operational scenarios to assess energy efficiency, dynamic response, and applicability in mobile machinery. A new load-prediction-based variable-supply-pressure valve-controlled (VPVC) hydraulic actuation strategy was proposed and developed by Du et al. [27] in which minimum supply pressure is required for corresponding valve spool displacement for the multi-axis hydraulic system. Using the proposed VPVC controller, less input power was required to accomplish the same motion as compared to a fixed-supply pressure-controlled (FPVC) conventional system. The experimental results obtained using the proposed VPVC hydraulic actuation method from two-axis hydraulic robot arms shows 70% of hydraulic energy saved as compared to the FPVC. A novel actuation system is presented by Hagen et al. [28] for an offshore drilling application that consists of three self-contained electro-hydraulic cylinders that can share and regenerate energy. Simulation study showed that the proposed self-contained system exhibits better energy efficiency as compared to the conventional valve-controlled cylinders containing systems. After simulation study, it was

observed that the self-contained electro-hydraulic system consumed 83.44% less energy without influencing the system's performance.

A novel parallel control of clamping force and energy is proposed and implemented by Chiang et al. [29] in hydraulic injection-molding machines in order to obtain high energy efficiency and accurate force control. Using the proposed controller in the simulation and experimentation of hydraulic injection-molding machines, it was noticed that the energy consumption was lower than that of the conventional machine. The integration of an energy-saving control strategy in the electro-hydraulic load-sensing system and position tracking control of valve-controlled actuator system was carried out by Cho and Noskievič [30] using a sliding-mode feedforward controller along with a feedback control system. The feedback control system comprises a load-sensing control system and valve-controlled cylinder system. After experimentation, it was observed that the pump energy input was reduced while using sliding-mode position tracking control in the load-sensing control system as compared to the conventional valve-controlled cylinder system. Yoon et al. [31] designed and proposed advanced construction machinery to achieve green emission demands and energy saving without affecting performance, safety, or reliability. The proposed construction machine employs electro-hydraulic actuators that consume less system energy than the conventional system's hydraulic valve-controlled actuators.

An energy-saving control strategy was proposed and developed by Wang and Wang [32] to enhance the efficiency of an electro-hydraulic servo system (EHSS). The proposed energy-saving strategy is based on a load-sensing structure and consists of variable-supply-pressure control (VSPC) in order to minimize the pressure loss across the proportional directional valve. The proposed strategy saved 62.5% of energy supply in harmonic reference tests and 90% energy supply for multi-step reference tests as compared to the fixed displacement system. Lovrec et al. [33] developed and studied a drive concept employing a speed-controlled induction motor along with a constant displacement pump in a load-sensing control system. The proposed drive concept was experimentally simulated on the prototype drive, and the obtained results using the suggested drive show low energy losses and noise emission, less steady state error, and improvement in control dynamics. Li et al. [34] proposed and developed a novel hydraulic pumping unit to overcome the drawback of a conventional pumping unit. The calculated and simulation model results show that the proposed hydraulic pumping unit saves a remarkable amount of energy as compared to the conventional pumping unit.

3.2. Independent Metering Systems (IMSs)

Independent metering systems (IMSs) are reshaping mobile hydraulics by decoupling the meter-in and meter-out functions, giving control systems the freedom to modulate each flow path independently and cut throttling losses that have long plagued conventional spool-coupled valves [35]. Independent metering systems (IMSs) represent a significant advancement in mobile hydraulic control. Unlike conventional systems where the meter-in (fluid entering the actuator) and meter-out (fluid leaving the actuator) functions are mechanically linked within a single spool valve, the IMS decouples these two flow paths. This decoupling allows each path to be modulated independently by the control system, typically using separate proportional or servo valves. As a result, the system can optimize flow and pressure for each actuator movement, drastically reducing throttling losses that are common in traditional spool-coupled valves. This leads to improved energy efficiency, more precise control, and greater flexibility in machine operation. An illustrative schematic of the independent metering system (IMS) layout is shown in Figure 4.

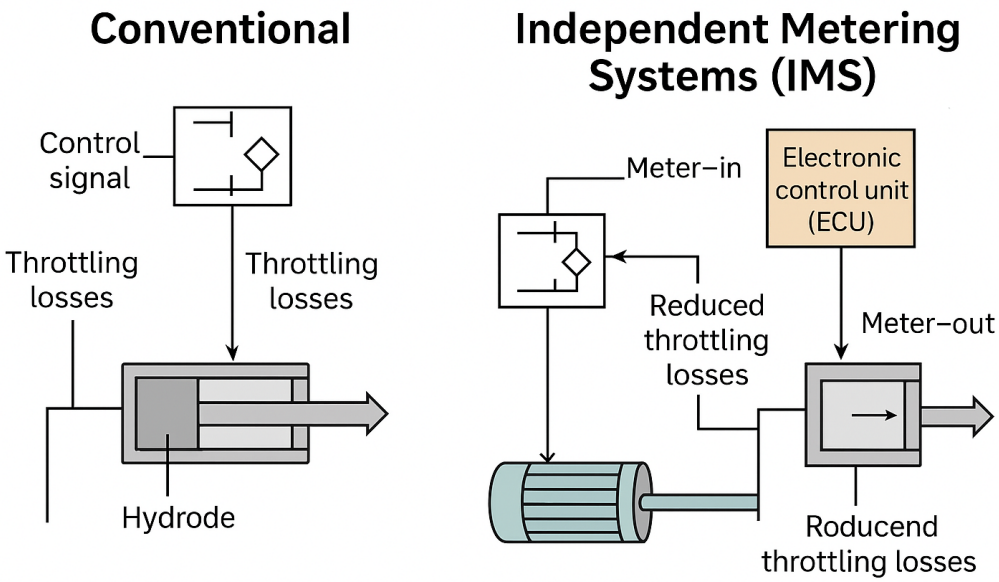

Figure 4. Illustrative schematic of independent metering system (IMS) layout.

A two-level coordinated control strategy was proposed and developed by Liu and Yao [36] for tracking motion precisely and saving a significant amount of energy in electro-hydraulic systems. The experimental results obtained show high-precision control output and significant energy savings using the proposed two-level control scheme with low-cost programmable valves. An energy regeneration and reutilization study for an electro-hydraulic energy-saving system was conducted by Gong et al. [37] based on a comprehensive optimization approach. Using an electro-hydraulic energy-saving system with optimum design parameters, a 15.6 % fuel saving rate was obtained and showed better system efficiency as compared to the conventional system. Reference [38] compares conventional and innovative hydraulic circuits for excavator booms, showing that a proportional flow control valve (PFCV) with artificial leakage improves energy efficiency by 8.5% over a proportional directional control valve (PDCV). Using a fuzzy-tuned PID controller in MATLAB version 2018b, the proposed system enhances actuator performance while reducing energy loss and environmental impact.

Axin et al. [39] studied a pump displacement hydraulic system employed with a flow controller and compared it to the conventional load-sensing system. After simulation and experimental studies, the flow-controlled system shows more energy efficiency and stability as compared to the conventional one. An energy-saving control strategy was proposed and developed by Lu et al. [40] to control the boom motion's joint angle in a hydraulic manipulator. The experimental results obtained demonstrated that the presented control strategy shows excellent tracking performance while consuming less energy as compared to the four-valve and five-valve flow regeneration control strategies. Generally, the hydraulic drive for a manipulator is usually operated in single mode as both an outlet/inlet, which causes losses of potential energy and hence minimizes the energy efficiency. Ding et al. [41] proposed a novel electro-hydraulic drive system which is independent of metering control to enhance the efficiency of a hydraulic manipulator. For different control modes of configuration, experimental results show better energy-saving ratios as compared to the conventional system, and pump flow meter-out mode shows higher efficiency due to minimum inlet losses.

3.3. Digital Hydraulics

Digital hydraulics represents a paradigm shift in fluid power technology, replacing traditional proportional or servo valves with arrays of on/off valves to achieve discrete, high-efficiency flow control. This approach not only improves energy efficiency but also enhances system robustness and fault tolerance [42]. The front angle change sensor, accelerator pedal sensor, and steering angle sensor are used as the deciding factors for the auto low idle condition for the engine, in which the engine shifts itself into the low rpm mode and prevents the unnecessary consumption of fuel.

Conventional load-sensing (LS) hydraulic systems in excavators and loaders waste significant energy through throttling losses as the pump must maintain the highest load pressure while excess pressure is dissipated as heat [43]. Digital hydraulics addresses this by replacing continuous throttling with intelligent on/off elements, enabling quasi-continuous flow control with minimal losses [44,45]. One promising approach is displacement-controlled (DC) actuation, where each actuator's flow is set by a variable-displacement unit, eliminating throttling and enabling energy recovery. Studies on cranes and excavators report up to 50% energy savings and reduced thermal load [44,46]. Similarly, digital displacement pumps (DDPs) digitally gate pistons to match demand efficiently, achieving 5–10% cycle energy reductions and enabling regenerative operation [47,48].

Independent metering valves (IMVs) decouple meter-in and meter-out orifices, reducing throttling and allowing flow regeneration. Experimental and simulation studies show 6–15% energy savings compared to LS systems [35,49]. Multi-pressure rail systems with digital flow control units (DFCUs) further minimize losses by selecting the lowest sufficient supply pressure, with simulations indicating up to 77% loss reduction [45]. Advanced concepts like switched-inertance hydraulic converters (SIHCs) act as hydraulic "power electronics," efficiently transforming pressure and flow without throttling [44,50,51]. Energy regeneration strategies for boom and swing motions recover 44–79% of potential energy and 33% of swing kinetic energy, significantly reducing fuel consumption [52,53]. Emerging electro-hydrostatic actuators (EHAs) and hybrid architectures complement these solutions, offering 22–37% energy reductions in mobile applications [52]. Future systems will integrate DDPs, multi-pressure rails, and SIHC modules, supported by predictive control and high-speed switching valves, to deliver sustainable, high-efficiency hydraulics for electrified and hybrid earth-moving machinery [47,51].

3.4. Tabular Comparison of Above Technologies

From the above subsections, several technologies are discussed. Table 2 provides an objective comparison based on four criteria: application suitability, energy-saving potential, cost, and system complexity.

The integration of advanced topologies such as electro-hydraulic actuators, independent metering systems, and digital displacement pumps marks a significant step toward minimizing throttling losses and improving overall system efficiency. However, reducing losses is only one aspect of achieving sustainable hydraulic performance. The next critical stage involves leveraging these innovations to enable energy-saving strategies and energy recuperation. By capturing and reusing energy that would otherwise be dissipated as heat, modern hydraulic systems can further enhance efficiency, reduce fuel consumption, and support electrification trends. This transition from loss reduction to energy recovery represents a paradigm shift in hydraulic system design, paving the way for smarter, more sustainable solutions. In Section 4 the energy recovery and hybridization will be discussed.

Table 2. Technology comparison of hydraulic system innovations for throttling loss reduction.

Technology	Application Suitability	Energy-Saving Potential	Cost and System Complexity
Electro-Hydraulic Actuators (EHAs)	Suitable for long-stroke cylinders with varying load and flow demands, common in off-road machinery and industrial presses	High due to elimination of throttling losses; pump energy is directly delivered to the actuator	Higher cost and higher control complexity due to minimal inherent damping compared with throttling-valve systems
Independent Metering Systems (IMSs)	Similar applications to EHA; suitable for machines requiring decoupled meter-in/meter-out control	Medium to high; depends on load conditions and recuperation strategy	Moderate to high cost; increased complexity due to multi-valve coordination
Digital Displacement Pumps (DDPs)	Widely applicable in excavators, wheel loaders, and industrial drives requiring variable flow	Very high; pump losses significantly reduced via switch-mode operation	High initial cost; requires sophisticated electronic control and fast-switching valves
Electro-Mechanical Actuators (EMAs)	Suitable for precise, low-to-medium force applications; limited adoption in heavy-duty systems	High; fully eliminates hydraulic losses, particularly throttling and leakage losses	High component cost; mechanical wear increases maintenance complexity
Hydraulic Hybrid Systems with Accumulators	Ideal for machines with cyclic, fluctuating loads (e.g., excavators and forklifts)	Medium to high; enables regeneration of braking or lowering energy	Moderate cost; additional accumulator, valves, and safety hardware increase complexity
Load-Sensing Systems (LSSs)	Common in construction and agricultural machinery	Low to medium; reduces throttling losses but still limited by centralized pump control	Low additional cost; complexity moderate and well understood in industry

4. Energy Recovery and Hybridization

Energy recovery and hybridization are transforming heavy machinery by improving efficiency and sustainability. Hydraulic accumulators, often referred to as "mechanical batteries," capture energy during braking or boom descent and release it for immediate reuse, significantly reducing energy losses. When integrated with electric drives, these systems provide high power density, precise control, and lower emissions, enabling smarter, faster, and more energy-efficient construction equipment. This synergy turns previously wasted energy into operational savings and supports the transition toward low-carbon machinery [54–57].

4.1. Hydraulic Accumulators

In general the boom's gravitational potential energy is captured during lowering or braking. The hydraulic cylinder converts this energy into hydraulic pressure, which is stored in an accumulator. A throttle valve between the cylinder and accumulator regulates the boom's descent speed. When needed, the stored energy is released to support lifting operations: the high-pressure fluid drives a hydraulic motor, converting hydraulic energy into mechanical power that assists the main pump and is ultimately fed back into the hydraulic system. The schematic representation of the accumulator-based energy recovery system is shown in Figure 5.

In a direct hydraulic accumulator recovery setup, the boom's weight produces high-pressure fluid in the rodless chamber of the hydraulic cylinder, which is stored in an accumulator. This stored energy can then be reused for lifting either via torque coupling—

converting it into mechanical power—or via flow coupling, directly supplying the hydraulic circuit.

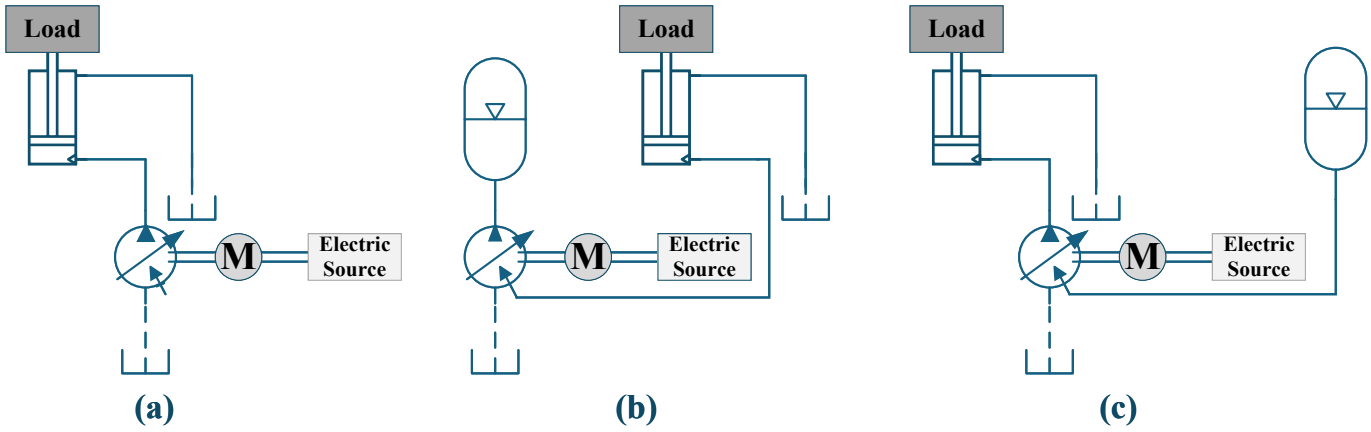

Figure 5. Represented schematic of accumulator-based energy recovery systems. (**a**) Pump mode operation; (**b**) energy recovery mode; (**c**) direct reuse mode [53].

Macor et al. [58] studied the output coupled hydro-mechanical transmission with the kinetic/braking energy recuperation using accumulators. The simulation work shows the improvement in efficiency of the transmission by 35% as compared to the conventional hydro-mechanical transmission for applications like city buses. Minav et al. [59] compared the similar electric forklift lifting system and direct hydraulic forklift lifting system in term of energy efficiency. The experiments were conducted using both systems at various fork velocities and payloads. After that the energy-saving ratios of both systems were calculated, and the maximum energy ratio, i.e., 45% was obtained for the free lift zone with optimized hydraulic pressure accumulator parameters. Costa and Sepehri [60] reviewed the role of accumulators as energy storage devices in hydraulic systems, akin to capacitors in electrical circuits. They explored various accumulator types—gas-loaded, spring-loaded, and weight-loaded—and their applications in hybrid vehicles, renewable energy systems, and industrial machinery. The study emphasizes energy recovery, circuit efficiency, and innovative control strategies while also addressing design challenges and future research directions.

Ranjan et al. [61] presents a novel approach to improving energy efficiency and reducing fuel consumption in hydraulic excavators. By integrating multiple hydro-pneumatic accumulators, the system effectively recovers and reuses energy from boom and swing operations. The circuit diagram used in the paper, along with the component names, is presented in Figure 6 and Table 3. The simulation results demonstrate significant improvements in energy recovery rates and overall system performance. The study highlights the potential of hydraulic energy storage systems in advancing sustainable construction machinery. Singh et al. [62] introduces an Accumulator-Based Energy Regenerative Technology (AERT) for excavator swing systems, capturing waste hydraulic energy during swing motion. Using MATLAB simulations, the proposed system shows a 17.79% energy saving over conventional setups. It offers a cost-effective, efficient solution for sustainable heavy machinery operations. Latas and Stojek [63] introduces a novel hydrokinetic accumulator integrated into a hydraulic lift system with the aim of enhancing energy recovery from water flow. Through simulation, it demonstrates improved efficiency and sustainability in hydraulic operations, offering promising potential for renewable energy applications. Yang et al. [64] proposes an innovative energy-saving system for hydraulic excavators using a three-chamber accumulator (TCA) to recover and reuse boom potential energy. The TCA boosts pressure and energy density by 43.28%, enabling efficient energy

release. Integrated with a control valve and electronic system, it maintains boom speed performance while reducing boom energy consumption by 47.99% and engine fuel use by 11.42%. The system significantly lowers the boom's share of total hydraulic power from 28% to 14.56%, demonstrating strong potential for improving excavator efficiency without compromising operational control. Yue et al. [53] introduces an energy recovery and direct reuse system (ERDRS) for hybrid excavators using a digital pump. The system captures boom potential energy, stores it in an accumulator, and reuses it efficiently. Simulations show 86% energy recovery and 78% reduction in external energy input, validating the system's effectiveness and offering new directions for hydraulic system design and control. The approaches, applications, main results, and advances related to energy recovery and hybridization using hydraulic accumulators are summarized in Table 4.

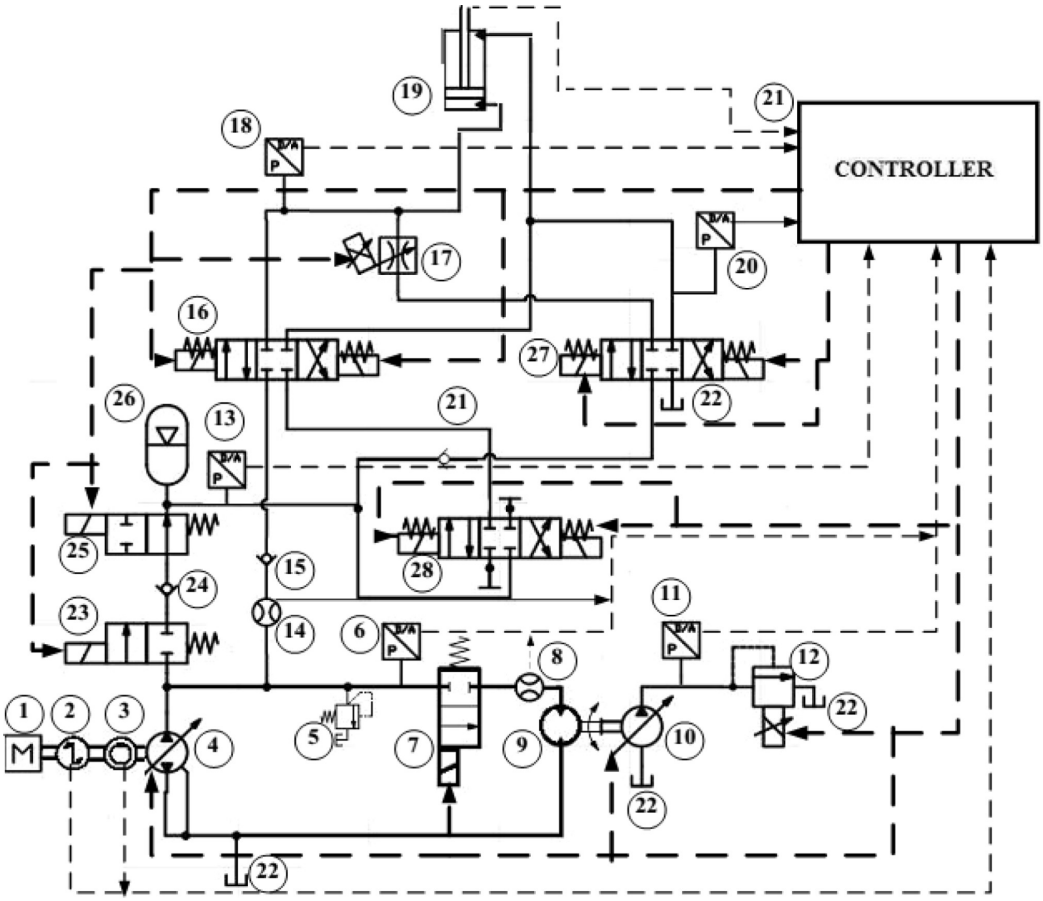

Figure 6. Circuit diagram of the test setup [61] (Table 3).

Table 3. List of components used in the above test setup [61] (Figure 6).

Item No.	Item Description	Item No.	Item Description
1	Electric motor	7, 23	2/2 directional control valve
2	Torque indicator (electric motor)	9	Hydro-motor
3	Speed indicator (electric motor)	10	Bi-directional loading pump
4	Variable displacement pump	11	Pressure transducer
5	Pressure relief valve	15, 21, 24	Check valve
6	Pressure transducer (outlet pump pressure)	16, 27, 28	4/3 directional control valve
8	Flow transducer (inlet of Hydro-motor)	17	Proportional flow control valve (PFCV)
12	Proportional pressure relief valve (PPRV)	19	Hydraulic actuator
13	Pressure transducer (accumulator pressure)	20	Pressure transducer
14	Flow transducer (main pump outlet)	21	Controller
18	Pressure transducer (actuator inline)	22	Tank
26	Hydro-pneumatic accumulator	25	2/2 directional control valve

Table 4. Energy recovery and hybridization using hydraulic accumulators.

Approach (Using Accumulator)	Application	Main Results / Advances	Reference
Hydraulic accumulator with flywheel integration	Excavator boom energy recovery	Fuel consumption reduced by 10%, energy efficiency improved by 13.7%	Liu et al. [65]
Direct hydraulic accumulator recovery	14-ton wheeled excavator	Fuel savings of 1 liter/hour	Amrhein and Neumann [66]
Electro-hydraulic hybrid accumulator system	38-ton excavator	Fuel savings of 5 liters/hour	Joo and Stangl [67]
Load-sensing accumulator system	Excavator boom	Energy-saving efficiency of 9%	Casoli et al. [68]
Parallel electro-hydraulic energy recovery system	Excavator	Throttling losses reduced by 60–75%, energy consumption lowered by 24–27%	Liang et al. [69]
Three-chamber hydraulic cylinder with accumulator	76-ton excavator	Energy recovery efficiency of 71%	Hao et al. [70]
Independent balancing cylinder with accumulator	6-ton excavator	Energy recovery efficiency of 50%, peak power output reduced by 64.9%	Xia et al. [71]
Electro-hydraulic hybrid drive with lead screw and accumulator	Boom lifting/lowering	Energy savings of 70%	Li et al. [72]
Accumulator balancing system with separate recovery/reuse cylinders	Excavator	Energy recovery efficiency of 65.9%, overall energy savings of 41.6%	Jun et al. [73]
Hydraulic accumulator with optimized parameters	Hybrid loader actuator	Energy recovery efficiency improved, fuel consumption reduced	Mu et al. [74]
NHESC combining air and electric storage	Mini-excavator boom	Regeneration efficiency of 55.1% vs. 41.1% for traditional accumulator	Yao et al. [75]
Hydraulic accumulator–motor–generator system	Hybrid hydraulic excavator	Regeneration efficiency of 45%, generator/motor power reduced by 60%	Lin and Wang [76]
Digital hydraulic cylinder with accumulator	Lifting/lowering device	Cylinder retraction speed of 74.3 dm/min, flow rate of 24.6 L/min	Pavel et al. [77]
Hydraulic accumulator in regenerative suspension	Off-road vehicles	Fuel economy improved by 29.27%	Zhou et al. [78]
Dual-accumulator hydraulic hybrid system	Hydraulic hybrid vehicle	Energy recovery efficiency of 43.35% vs. 22.22% for single accumulator	He et al. [79]

The technology to capture kinetic energy of the heavy duty vehicle during intermittent operation is implemented effectively through the hydraulic accumulators due to its high

power density [80]. This reduces the pressure on the mechanical brakes and increases the reliability of the system. However, this technology is less effective for the vehicles operating at steady speeds on the highway. The electrical energy recovery during braking recovers only 1–2% of the kinetic energy per stopping event. This is mainly by virtue of the low power density of the battery pack. Hence, the hybrid HST system with accumulators is superlative for recovery of energy from high speed, which is inherent characteristic of the braking operation Latas and Stojek [63]. The diesel electric hydraulic hybrid along with kinetic energy recuperation using hydro-static transmission has been analyzed through simulation by Wang et al. [81]. The engine operation is optimized by sharing the load between the electric generator driving the electric motor and charging the battery bank. For fragmented start and stop operations, kinetic energy is recovered in the hydraulic accumulators during the braking operation with the assistance of the electro-magnetic clutch by attachment and detachment of the hydraulic system, which is functional during braking and accelerated motion of the machine. However, the accumulators are mostly appropriate for the rapid stop and go, which is suitable for its high power density characteristics. For the applications which incorporate the downhill motion of a heavy loaded truck, energy storage at a slow rate is required. This requires heavy hydraulics for the recovery of the waste power in the braking action.

4.2. Hydraulic–Electric Hybrids

Hydraulic–electric hybrids integrate hydraulic accumulators with battery storage to harness the best of both energy domains. These systems enable regenerative braking, capturing energy during deceleration or boom lowering, and reuse it for subsequent high-demand operations, such as lifting or acceleration. By leveraging fast-responding, high-power-density hydraulic accumulators alongside batteries' longer-term energy buffering, modern construction machinery achieves improved fuel efficiency, lower emissions, and smoother power delivery, even during load spikes or repeated cycles. This fusion is reshaping heavy equipment, reducing operational costs, and promoting sustainability in demanding off-highway environments [82,83].

Comparative studies between series/parallel hydraulic hybrid and series/parallel electric hybrid vehicles for on-road applications have been carried out by many researchers. Comparison through simulation study suggest that the series hybrid hydraulic (SHH) has superior kinetic energy recuperation capability to the series electric hybrid due to the better power density of the accumulator than the battery bank. Work on hybridization for construction machineries has also been conducted by many researchers [84–86]. They introduced a hybridization factor (HF) as the ratio of the power of the hybrid segment to the total installed power of the on/off machines. Based on the value of the HF, the proposed hybrid drives are classified as full hybrid ($0.5 < HF < 0.7$), mild hybrid ($0.25 < HF < 0.5$), and minimal hybrid ($0 < HF < 0.1$) [87]. Representations of the Series Traction, Parallel Hybrid Volvo L220F Hybrid Topology, Parallel Hybrid with Super-Capacitor, and Parallel Hybrid Kobelco excavators are shown in Figures 7, 8, 9, and 10, respectively.

Truong et al. [88] reviewed the challenges associated with the micro/mild hybridization (MMH) of the construction machinery and compared it with the hybrid electric passenger vehicles. The fuzzy cognitive maps (FCM) technique is used for the evaluation of MMH potential for construction machines with different variants based upon the data mining and expert instructions. The following Tables 5 and 6 show the commercially available hybrid off-road machines developed by some of the well-established original equipment manufacturers (OEMs) with the system architecture, the HF value, and the respective fuel reduction. The different topologies like series, parallel, and power-split transmissions for the HEMMs like wheel loaders have been discussed by eminent researchers from M/s

Volvo Construction Equipment [89,90]. It has been inferred that one topology is favorable under a specific operating condition. Alteration of the loading condition leads to inefficient operations.

Table 5. Commercially available hybrid HEMMs with different architectures [87] and approximate cost.

OEM Model	Type of HEMM	Traction Architecture	Loading System	Energy Storage	Approx. Cost (USD) [91]
Caterpillar D7E	Dozer	Series	Conventional	None	300,000
Volvo L220F	Loader	Parallel	Parallel	Battery	320,000
Mecalac 12MTX	Articulated loader	Parallel	Parallel	Battery	83,000
John Deere 644K	Wheel Loader	Series	Parallel	None	140,000
Merlo TF 40.7	Tele-Handler	Series	Parallel	Battery	150,000
Claas 6030	Tele-Handler	Parallel	Conventional	Battery	40,000
Kobelco SK200H	Excavator	Conventional	Series	Battery/Capacitors	50,000
Komatsu HB215 LC-1	Excavator	Parallel	Parallel	Supercapacitors	40,000

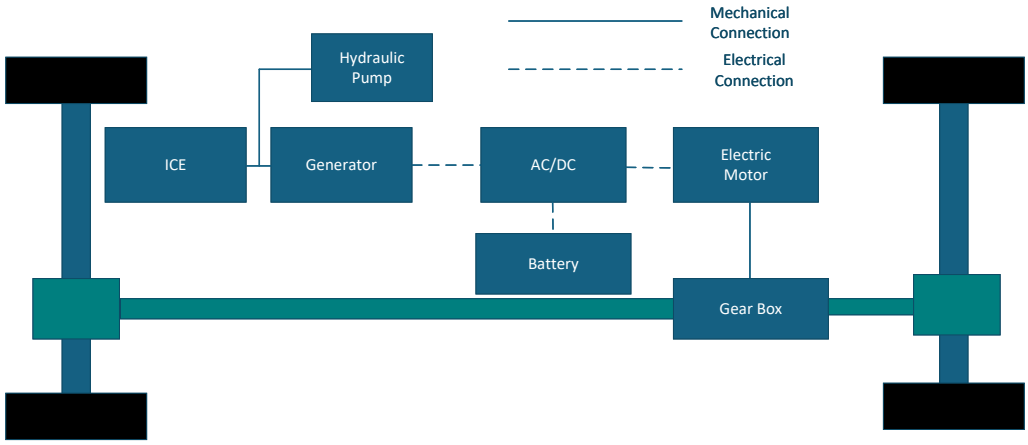

Figure 7. Series traction.

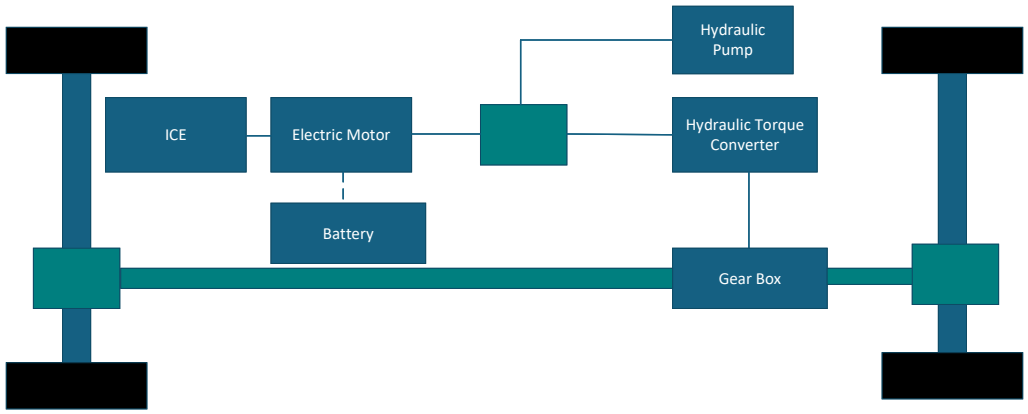

Figure 8. Parallel hybrid Volvo L220F hybrid topology.

Table 6. Commercially available hybrid HEMMs and respective value of HF and fuel reduction.

OEM Model	Weight (ton)	Driving EM Power (kW)	Loading EM Power (kW)	ICE (kW)	HF	Fuel Reduction (%)
Caterpillar D7E	26	2 × 60	0	176	0.40	24
Volvo L220F	32	50	50	259	0.16	10
Mecalac 12MTX	8.3	20	20	51	0.28	20
John Deere 644K	19	80	80	171	0.32	25
Merlo TF 40.7	7.5	60	40	56	0.52	30
Claas 6030	5.6	40	0	55	0.21	20
Kobelco SK200H	20	0	37	114	0	40
Komatsu HB215 LC-1	21	20	90	104	0.16	25

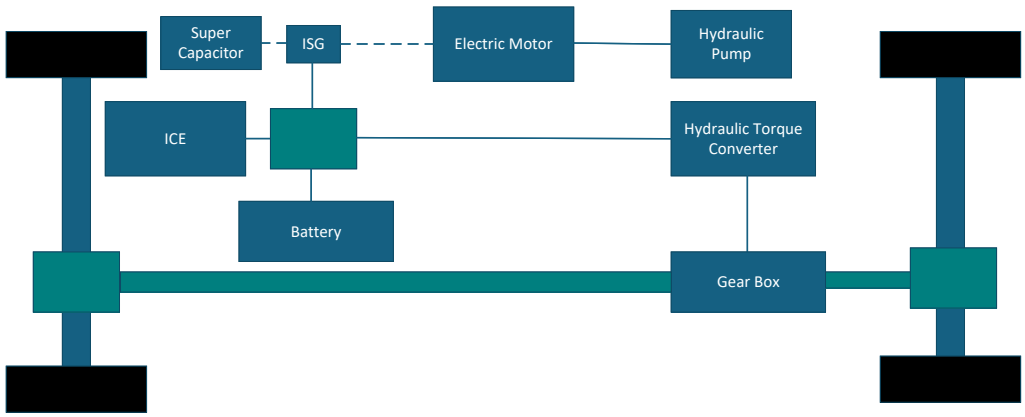

Figure 9. Parallel hybrid with super-capacitor.

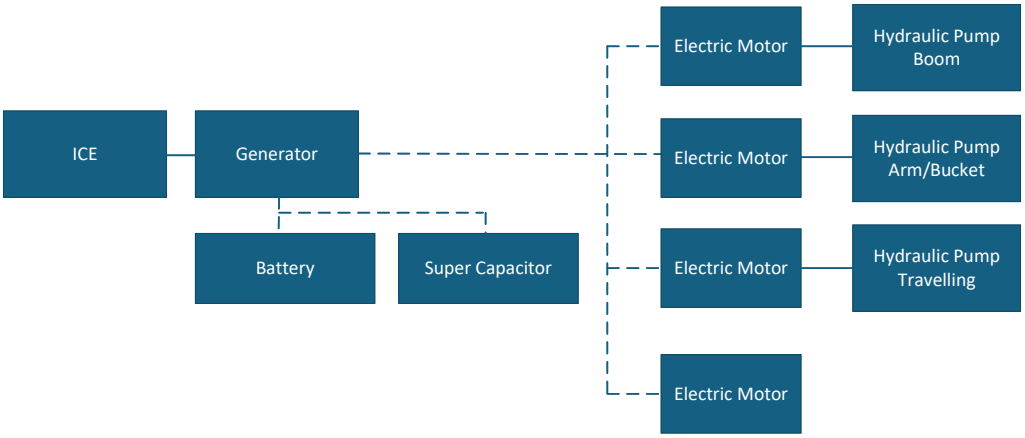

Figure 10. Parallel hybrid kobelco excavator.

The work conducted by Bertini et al. [92] compared the different hybrid configurations for the skid loaders. It is proposed that the fuel savings range from 11% to 31% can be achieved depending upon the configuration and control strategy of the transmission. It is explained that confrontation always exists between the energy efficiency and system modifications. Bravo et al. [93] developed the parallel hydraulic pneumatic hybrid transmission for capturing both the advantages of the high-power-density hydraulic and highly energy-dense pneumatic system. Hydraulic and pneumatic systems have fast and slow braking requirements, making them suitable both for city and highway driving conditions. A simulation model of the designed system developed on the MATLAB platform was validated through experiments. The fuel savings for about 20% and 70% kinetic energy recovery was achieved for the reuse of the braking energy with the parallel hybrid technology [80,94,95]. Adoption of braking energy regeneration technology results in a 40% reduction in carbon emissions as per the study conducted by the US Environmental Protection Agency [96,97]. Bhola et al. [98] presents a modified RH-SPT drive with a fuel-efficient controller to minimize engine torque fluctuations and optimize fuel use in hybrid front-end loaders. MATLAB simulations and experiments show improved efficiency, reduced BSFC, and stabilized engine performance, contributing to lower emissions and better hybrid construction equipment design. The circuit diagram used in the paper, along with the component names, is presented in Figure 11 and Table 7.

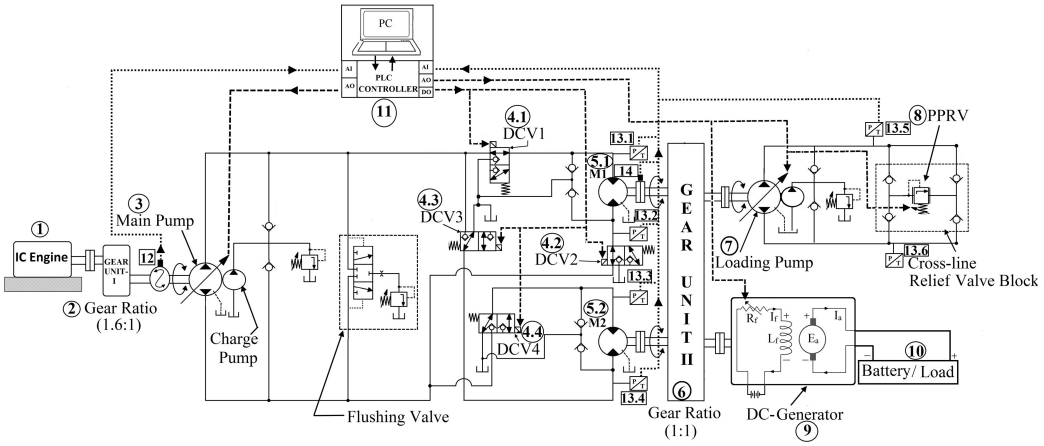

Figure 11. Circuit diagram of the test setup [98] (Table 7).

Table 7. List of major components and their specifications (Figure 11).

S/n	Component/Specifications	S/n	Component/Specifications
1	IC engine	8	Proportional pressure relief valve
2	Gear Unit I	9	DC generator
3	Swash-plate-controlled variable displacement piston pump	10	Battery bank (lead), 12 V and 200 Ah
4.1–4.4	Direction control valves	12	Torque sensor
5.1–5.2	Bent axis fixed displacement hydro-motor	13.1–13.6	Pressure transducer
6	Gear Unit II	14	Speed sensor
7	Swash-plate-controlled variable displacement loading pump		

4.3. Advanced Transmission Systems

4.3.1. Hydrostatic Transmission (HST) and Power-Split Systems

The HST system has advantages over the hydro-dynamic transmission with a mechanical gear box used in an earlier model of the FEM machine. However, the recent model of the FEL machine uses HST systems for effective operations with a cyclic load profile [99]. The effectiveness is in terms of efficiency, smoother operation, better control, and easier maintenance and monitoring. Bhola et al. [100], Ghoshal et al. [101], Kumar et al. [102] introduced an innovative control algorithm that dynamically adjusts the displacement of variable displacement pumps and hydro-motors in coordination with engine speed based on the drive's loading conditions. While this approach enhances system responsiveness and efficiency, it relies on torque sensors mounted on the drive wheels—an addition that significantly increases equipment costs. To mitigate this limitation, an alternative strategy could involve estimating load conditions directly from statistically characterized duty cycles, potentially eliminating the need for costly sensor installations. Many researchers have contributed to the efficient development of the transmission deployed for traction and other heavy duty operations of the HEMMs. One category of innovation adopted for the development of efficient transmission is the power-split transmission for enhancing the efficiency of drives subjected to wide fluctuation of load. Gottschalk et al. [103] developed a test bench for evaluating the energy efficiency of wheel loaders. The drive cycle is estimated using field data for different operations. These cycles are replicated on the test bench by using the load generators on each wheel of the loader along with the load on the working hydraulics and steering operation. It is proposed that the developed test bench is very much beneficial for the actual estimation of the fuel efficiency of the wheel loaders for different load cycles of operations. However, only the hydro-static transmission and split power transmission was considered for the fuel economy evaluation. Many researchers have also worked on the development of various hydro-mechanical transmission (HMT) systems considering the losses in the torque converter used as the conventional power transmission component used in the loaders.

Xiong et al. [104] designed and developed a hydraulic power-split transmission system for wheel loader application and compared it with the HST system. The authors proposed dynamic variation of displacements of hydraulic units, which depends on the velocity controller for both the transmissions subjected to same load cycle. The simulation model of the proposed transmission system suggests that the power-split transmission is more efficient than the HST system by 8%. However, the validation for the dynamics of the displacement units used in the simulation model could not be performed. The work performed by Krauss and Ivantysynova [105] examines two different HST systems, one with a simple power-split transmission and the other with a hydro-static twin-motor transmission with a detachable hydro-motor. It was found that the efficiency for the PST is higher as compared to the multi-motor concept, but the installation of the former is tougher than that of the later. Hence, the multi-motor concept was found to be the best alternative to the transmission with the torque converter. However, the control aspect for smoother operation of the drive is still precarious. SANNELIUS et al. [106] studied different control strategies for the switching from the single-motor to the twin-motor mode with the usage of a variable displacement pump and variable displacement hydro-motor with a synchronization clutch. The control strategies were developed for the smoother attachment/detachment of the hydro-motor for the efficient operation of the drive.

4.3.2. Hydro-Mechanical Transmission (HMT) and Variants

Sun [107] concluded that HMT systems are more efficient than pure HST systems and are complex in design to implement, which limits their commerciality. Pettersson [108] showed the need for optimization techniques for the design of hydromechanical transmissions due to the involvement of multiple factors in the HMT. This shows the challenges associated with the development of the HMT. Mercati et al. [109] developed a hydro-mechanical variable transmission which dissociates the engine from the driving manner of the operator for a reach-stacker application. Experimental analysis was conducted, and it was inferred that pure HST is beneficial for low-speed operation of the system, with the engine running at low rpm providing better efficiency than the system with torque converter. Liu et al. [110] designed four different configurations for the hydro-mechanical power-split transmission (HMPST) based on the lever diagram. It was observed that the HMPST system splits power between the high-efficiency mechanical path and low-efficiency torque converter path through a power split mechanism to increase the overall efficiency of the transmission [111]. It was also found through simulation that only one solution out of four shows significant fuel savings. This shows the need for optimization for designing HMT for particular operating conditions. However, the simulation model was not validated with the experimental results. You et al. [112] studied the modular design of the multirange input coupled HMT for a heavy duty vehicle to achieve higher cruise speed. The overall efficiency of the transmission was found to be 83%, which is higher than the hydro-static transmission. However, the proposed design was implemented only in heavy duty trucks with a cruising speed of 120 km/h. From the above literature survey, it has been noticed that the torque-converter-based technology for the wheel loader transmission is highly inefficient, which motivates stakeholders in the development of transmissions. In this regard, the HMT and hydro-static transmission are replacing the torque converter. However, the efficiency of the HMT is higher than that of the pure HST, but its execution is cumbersome. Hence, HST is found to be the foremost solution for the future transmission used for the loaders. With the advancement of technology and need for efficient hydraulics, hybridization for the transmission is the solitary solution for enhancing the fuel efficiency of heavy machineries.

The technology comparison and suitable applications for these technologies are discussed in Table 8.

Table 8. Technology comparison of energy recovery and hybridization approaches.

Technology	Application Suitability	Energy-Saving Potential	Cost and System Complexity
Accumulator Recovery [19,53,64,113]	Highly effective in boom and swing motions with intermittent braking and cyclic load profiles common in excavators and loaders	High fuel savings (17–48%) due to 70–86% energy recovery efficiency during high-pressure bursts	Moderate cost increase; requires high-pressure components (3000–5000 PSI) and careful accumulator sizing
Series Hydraulic Hybrid [19,114]	Best suited for urban, stop-and-go duty cycles such as refuse trucks and compact construction equipment	Significant energy recovery (>70% regeneration) with fuel savings of 21–35%	High system complexity; requires multiple hydraulic machines and advanced control strategies
Parallel Electric Hybrid [115,116]	Ideal for applications with frequent load spikes such as wheel loaders and V-loading cycles	Strong fuel reduction (20–40%) with 60–80% overall system efficiency	High initial cost due to electric machines, power electronics, and energy storage integration
Hydrostatic Transmission (HST) [117,118]	Suitable for low-speed, highly cyclic operations requiring precise control, such as compact loaders	Moderate efficiency gains (10–20%) compared to torque converters	Relatively simple architecture but limited efficiency at higher speeds
Power-Split Transmission (PST) [99,119]	Well-suited for mixed operating conditions combining cyclic work and higher-speed travel	Improved efficiency (15–25%) over conventional torque converter systems	Moderate-to-high complexity due to mechanical and hydrostatic power paths
Hydromechanical Transmission (HMT) [120,121]	Optimal for applications requiring both high cruise speeds and cyclic work, such as agricultural tractors	High overall efficiency (up to 83%) with fuel savings of 20–30%	High design and control complexity; increased manufacturing and maintenance costs

Advanced control strategies are required to implement these complex hydraulic systems. While these controls play a crucial role in enhancing energy efficiency and ensuring robust system performance, they also introduce certain trade-offs, such as increased computational complexity and cost. To address these challenges, it is essential to provide an overview of advanced control algorithms that can improve system robustness and adaptability. These algorithms—ranging from model predictive control (MPC) and adaptive control to machine learning-based approaches—offer the capability to handle nonlinearities, uncertainties, and dynamic operating conditions, thereby enabling optimal performance in energy-efficient hydraulic systems.

5. Smart Sensors and Predictive Control

The deployment of IoT-enabled smart sensors in heavy earth-moving machinery is revolutionizing energy efficiency by enabling real-time monitoring of operational parameters such as hydraulic pressure, engine load, and fuel consumption. These sensors facilitate continuous data acquisition, which is essential for predictive analytics and proactive maintenance strategies. By analyzing sensor data, AI-based systems can detect anomalies, forecast failures, and optimize performance, thereby reducing downtime and operational costs [122,123].

Advanced control algorithms, particularly model predictive control (MPC), are increasingly used to manage energy flow under dynamic conditions. MPC anticipates future system states and adjusts control inputs accordingly, improving energy utilization and system stability. For example, dual-layer MPC frameworks have demonstrated significant improvements in energy efficiency and operational reliability in transportation systems, suggesting strong applicability to earth-moving machinery [124]. These innovations align with Industry 4.0 principles, promoting intelligent, self-optimizing machinery capable of adapting to varying workloads and environmental conditions. As smart sensor technology and AI continue to evolve, the future of heavy machinery lies in autonomous systems that

maximize energy efficiency while minimizing environmental impact. A comparison of traditional and smart-controlled hydraulic systems is presented in Table 9.

Table 9. Comparison of traditional vs. smart-controlled hydraulic systems.

Feature	Traditional Hydraulics (References)	Smart-Controlled Hydraulics (References)	Comparison
Flow control	Valve throttling in valve-controlled circuits (spool-based metering), causing throttling losses and limited adaptability [125–128].	Predictive/on-demand control (MPC, adaptive predictors, RL-based optimization) coordinating pump/valve/cylinder [129–131].	Smart control anticipates load changes and regulates flow/pressure proactively, reducing throttling.
Energy recovery	Minimal native recovery; potential energy usually dissipated as heat via throttling/relief [132,133].	Integrated recovery using accumulators, batteries/supercaps, and hybrid topologies [15,134,135].	Smart systems capture and reuse potential/kinetic energy, lowering thermal load and power demand.
Idle losses	High due to constant or high stand-by pressure/flow; leakage and throttling at partial loads [130,136].	Reduced via demand-based actuation (variable-speed pumps, digital hydraulics) [137,138].	Demand-matching lowers stand-by and throttling losses; digital/variable-speed actuation minimizes no-load power.
Fault detection	Manual inspection dominates; limited real-time visibility [139,140].	Sensor-rich monitoring, data fusion, and AI-driven predictive analytics [137–139].	Smart diagnostics enable real-time fault detection, fewer failures, and condition-based maintenance.

6. Quantitative Comparison of Emerging Actuation and Transmission Technologies

Recent advancements in industrial automation have introduced technologies such as electro-hydraulic actuators (EHAs) and hybrid transmission systems, which exhibit significant differences in initial investment, maintenance costs, and long-term energy-saving benefits compared to conventional solutions.

Electro-hydraulic servo actuators typically involve a substantial capital outlay, with unit costs ranging between USD 80,000 and USD 100,000, depending on application-specific requirements and performance specifications [141]. Hydraulic actuators, while offering high power density and durability, generally require higher upfront investment than pneumatic systems due to their complexity and auxiliary components such as pumps, reservoirs, and valves [26]. Conversely, electric actuators, although more expensive per unit of force compared to pneumatic cylinders, often present a lower initial cost than sophisticated hydraulic systems for moderate-load applications [142]. Pneumatic cylinders remain the most cost-effective option for light-duty industrial tasks owing to their simple design and low material costs [143].

Electro-hydraulic systems generally incur higher maintenance expenses due to specialized servicing and fluid management requirements; however, their sealed architecture and integrated design often result in extended service intervals compared to conventional hydraulic systems [144]. Electric actuators, by contrast, demand minimal upkeep, primarily involving electrical components, and can reduce annual operating costs by USD 130–210 in low-power applications relative to pneumatic alternatives [145]. Hybrid transmission systems, widely adopted in industrial vehicles and machinery, demonstrate 15–30% lower annual maintenance costs compared to conventional drivetrains, with typical service expenses for small hybrid industrial vehicles ranging from AUD 500 to 1000, whereas major component replacements—such as hybrid transmission units—can reach USD 11,000 [146].

Electro-hydraulic actuators equipped with energy regeneration capabilities achieve efficiencies up to 84.7% during resistive phases and can recuperate 81.8% of energy under

overrunning load conditions, significantly reducing throttling losses common in traditional hydraulic systems [3]. Electric actuators also outperform pneumatic and hydraulic counterparts in energy efficiency for mid-range applications, contributing to lower lifecycle operating costs. Hybrid transmission systems in industrial and vehicular applications leverage regenerative braking and optimized power distribution, delivering substantial fuel and energy savings over conventional architectures. Furthermore, integration with renewable energy sources and smart grid technologies amplifies these benefits, enabling enterprises to reduce emissions and operational costs while enhancing sustainability performance [147].

The shift toward green and hybrid technologies provides enterprises with a competitive edge by enhancing energy efficiency, extending equipment lifespan, and ensuring compliance with decarbonization goals. Lifecycle cost assessments consistently show that, although the upfront investment may be higher, solutions such as electro-hydraulic actuators (EHAs) and hybrid systems offer a significantly lower total cost of ownership (TCO) and achieve faster payback periods once energy savings and reduced maintenance requirements are taken into account [148]. A concise overview of these aspects is provided in Table 10.

Table 10. Cost and benefit comparison of actuation technologies.

Technology	Initial Investment	Maintenance Cost (Yearly)	Long-Term Energy Savings
Electro-hydraulic actuator	USD 80,000–100,000/unit [149]	Moderate–High [150]	High (for heavy-duty tasks) [151]
Electric actuator	Moderate–High [143]	Low [151]	High (energy efficient) [151]
Pneumatic actuator	Low [152]	Moderate [145]	Low–Moderate (typical energy loss) [150]
Hybrid transmission system	Moderate–High [153]	Low–Medium (AUD 500–1600/year) [154]	High (15–30% maintenance savings) [154]
Renewable energy systems	High [155]	Low (minimal routine)	Very high (lower operating costs; regulatory benefits) [156]

7. Emerging Trends

Fluid power technology is undergoing a coordinated transformation toward efficiency, compactness, and sustainability, with each trajectory reinforcing the other. Electrification, initially prominent in smaller machinery, integrates naturally with digital control, enabling electric actuators to replace traditional hydraulics for higher precision, reduced maintenance, and seamless automation in sectors like construction and agriculture [157]. Simultaneously, miniaturization of high-pressure components maintains or enhances energy density while reducing mass and footprint, supporting space-constrained mobile platforms that benefit from electrified, digitally managed motion [158]. Sustainability considerations further align with these trends: biodegradable, low-toxicity fluids derived from vegetable oils mitigate leakage risks and environmental impact while meeting performance requirements and ESG targets [159].

Complementing these system-level advances, engine-side strategies are emerging to improve fuel efficiency during idle and low-load conditions. For example, cylinder deactivation during low-load, high-speed operation reduces fuel consumption by 11% in economic mode and 13% in heavy-load mode [160], though its vibration effects remain unstudied. Similarly, wheel loaders—idling for nearly 40% of their duty cycle [161]—cannot rely on frequent start-stop due to immediate hydraulic power demands. To address this, a patented low-idle control system has been developed [162]. A concise overview of these focus areas, technology types, impacts, and challenges appears in Table 11.

Table 11. Emerging trends in fluid power.

Trend	Focus	Types	Impact	Challenges
Fluid Power Electrification [163–166]	Shift to electric actuators and hybrid systems	Electro-mechanical actuators (EMAs), and electro-hydraulic hybrids	Energy efficiency, reduced emissions, and precise control	High initial cost, integration complexity, and thermal management.
Compact High-Pressure Components [167–171]	Reduce size and weight while maintaining energy density	Modular valves, high-strength alloys, and piezoelectric microvalves	Improved maneuverability, reduced fuel consumption, and higher precision	Manufacturing complexity, cost of advanced materials, and fatigue under ultra-high pressure.
Eco-Friendly Hydraulic Fluids [172–175]	Sustainability and environmental compliance	Vegetable oil-based fluids, synthetic esters, and bio-hydraulic fluids	Reduced ecological impact, compliance with ISO 15380 [176] and improved lubrication properties	Higher cost, oxidation stability, and limited temperature range.

Realizing these trends in practice requires an integrated standards backbone that connects concepts to compliant operation. At the system level, specifications should be anchored to ISO 4413 for design, assembly, marking, and maintenance so that safety rules remain consistent across the lifecycle [177]. On that foundation, safety-related control functions are defined and validated coherently: PL_r is determined per ISO 13849-1:2023, and IEC 61508 applies whenever programmable electronics are used to claim SIL targets—bridging mechanical, hydraulic, and E/E/PE disciplines [178,179]. Clear documentation then sustains operability, with circuit diagrams and symbols standardized to ISO 1219 [180]. Reliability is protected by contamination control: fluid cleanliness targets are set according to ISO 4406 and verified using particle counters calibrated to ISO 11171:2022 [181,182]. For conveyance, constant-pressure hoses should be configured according to ISO 18752 and 24° cone fittings according to ISO 8434-1 to ensure impulse durability and leak-tight connections that suit compact layouts [183,184].

As machines become connected, cybersecurity and interoperability must scale in lockstep with safety and reliability: IEC 62443 should be applied across the industrial automation lifecycle and standardized data exposed via OPC UA/VDMA 40001 companion models, aligning device identification, process values, and job/energy management with higher-level systems [185]. Corporate practice cases show the end-to-end integration: Danfoss conforms with EN ISO 4413/13849 and reports digital displacement HPU energy savings of about 37.5%, illustrating how software-defined hydraulics meet safety and efficiency simultaneously [186]; Bosch Rexroth packages "Connected Hydraulics" with smart power units and digitally enabled valves that operationalize these standards at scale [187]; and Parker embeds ISO 4406 practices within contamination monitoring to preserve component life and system uptime [188]. Finally, coherent closure must be ensured, with acceptance tests conducted per ISO 4413 and SRP/CS validated per ISO 13849-2, so that electrified, compact, and sustainable designs transition seamlessly from specification to compliant operation [177,186,189].

To support practical adoption and connect trends to procurement and validation comparative metrics must be reported alongside narrative claims. For environmental oils, ready biodegradability (OECD/ASTM), pour point (PP), oxidation stability, and efficiency indicators should be included: bio-based fluids frequently reach $>80\%$ biodegradation versus <30% for many mineral basestocks [190,191]; modified synthetic esters demonstrate PP down to $-48\,^{\circ}C$ and oxidation onset $\approx 142\,^{\circ}C$ with validated wear (HFRR) [192]; life-cycle comparisons show lower GWP and primary energy for rapeseed-based fluids, with trade-offs in eutrophication/acidification relative to mineral oils [159]; and field-oriented efficiency assessments should couple viscosity–temperature data with fuel use on mobile machines [193]. For compact high-pressure components, pressure–footprint, bandwidth–Δp, and pulsation/noise should be reported: piezo-hydraulic microvalves achieve $\approx$1 kHz

at ≈300 kPa differential [169]; millimeter-scale actuators are validated to ≈1.7 MPa with simultaneous force–contraction prediction [194]; and micro-hydraulic dampers measurably reduce ripple/noise in compact systems [195]. Presenting these datasets alongside standards and cases ensures that the emerging trends are not only compelling but operable across the full lifecycle.

8. Challenges and Future Prospects

Improving energy efficiency in heavy earth-moving machinery is critical for reducing fuel consumption and emissions in the construction and mining sectors. However, several challenges hinder widespread adoption of advanced solutions. Integration cost remains a major barrier as hybrid and electro-hydraulic systems significantly increase upfront investment compared to conventional designs. Reliability is another concern; electronic and electro-hydraulic components must withstand harsh operating conditions, including extreme temperatures, dust, and vibrations, which can compromise system durability. Furthermore, standardization issues persist due to the lack of uniform architectures for hybrid and fully electrified systems, complicating interoperability and maintenance [196].

Future prospects are promising and are driven by technological innovation and sustainability goals. Research is increasingly focusing on AI-driven control strategies to optimize energy use through predictive analytics and adaptive load management, enhancing operational efficiency and reducing downtime. Integration of renewable energy sources, such as solar-assisted charging and hybrid powertrains, is expected to complement electrification efforts. Additionally, the development of fully electrified hydraulic systems offers potential for eliminating fossil fuel dependency while maintaining high power density required for heavy-duty applications. These advancements will require robust policy frameworks, industry collaboration, and investment in resilient designs to overcome current limitations and accelerate the transition toward sustainable machinery [197,198]. Key challenges and future directions for energy efficiency in heavy earth-moving machinery, including major challenges and research focus areas, are summarized in Table 12.

Table 12. Key challenges and future directions for energy efficiency in heavy earth-moving machinery.

Major Challenge	Future Work/Research Focus
Integration Cost	Development of cost-effective modular and scalable electro-hydraulic/electric architectures (common DC buses, modular power stages) and design-for-integration toolchains to reduce engineering hours and bill-of-material premiums over time [199,200].
Reliability	Robust sensing and packaging (wide-bandgap power modules, high-temperature interconnects), physics-of-failure models, and fault tolerance. AI-assisted health monitoring (prognostics and predictive maintenance) validated in real-world duty cycles [201,202].
Standardization	Development and harmonization of open interfaces and safety/efficiency requirements for mobile electro-hydraulics (controllers, DC links, communication, and diagnostics), aligning with international fluid-power safety standards [199,200].

Emerging research in heavy-duty machinery emphasizes mainly three transformative directions. First, AI-driven control strategies are enabling energy-optimal actuation and adaptive coordination of pumps and valves, significantly improving efficiency and reducing fuel consumption [203]. These intelligent algorithms leverage machine learning and reinforcement learning to dynamically optimize hydraulic and powertrain operations under varying load conditions [131]. Second, the integration of renewable energy sources—including battery-electric and fuel-cell electric vehicle (BEV/FCEV) platforms—combined

with on-site renewable charging infrastructure is critical for reducing lifecycle emissions and achieving sustainability targets [204]. Finally, the development of fully electrified hydraulic systems, such as electro-hydrostatic actuators and digital hydraulics, promises to eliminate traditional energy losses inherent in fluid power systems while enabling precise, software-defined control. Together, these innovations represent a paradigm shift toward cleaner, smarter, and more efficient heavy machinery, aligning with global decarbonization and Industry 4.0 objectives.

9. Conclusions

The evolution of hydraulic systems in heavy earth-moving machinery—from traditional valve-controlled throttling architectures to advanced electro-hydraulic, digital, and hybrid configurations—marks a transformative shift in fluid power engineering. Conventional systems, while durable and reliable, suffer from significant throttling losses and limited controllability, resulting in lower energy efficiency and higher emissions. Emerging technologies such as displacement-controlled actuators, independent metering valves, and electro-hydrostatic drives promise precise flow regulation, adaptive load response, and seamless integration with electronic control units, enabling substantial improvements in fuel economy, carbon reduction, and machine responsiveness.

However, realizing these benefits requires more than technological innovation; it demands a deep understanding of system behavior and the establishment of industry-wide standards. Diverse duty cycles across machine types must be statistically analyzed and standardized to enable meaningful comparisons and optimization under realistic conditions. Furthermore, the integration of smart sensors, IoT connectivity, and predictive analytics is bridging mechanical systems with digital intelligence, facilitating real-time monitoring, fault detection, and adaptive control strategies. Coupled with the trend toward electrification, these developments point toward a digitally connected, energy-optimized, and sustainable hydraulic ecosystem.

Looking ahead, critical research gaps remain in duty cycle modeling, energy efficiency benchmarking, digital twin integration, and electrification strategies. Over the next 5–10 years, efforts should focus on creating standardized duty cycle profiles for major machine categories, defining universal energy efficiency KPIs, achieving predictive maintenance accuracy above 90%, and demonstrating hybrid architectures that deliver at least 15–20% fuel savings and 10–15% CO_2 reduction. Establishing ISO-compliant standards for interoperability will be essential to accelerate adoption.

In summary, the future of hydraulics lies in the convergence of advanced electro-hydraulic technologies with data-driven insights, supported by standardized validation frameworks and intelligent design, paving the way for a new era of sustainable and smart fluid power systems.

Author Contributions: Conceptualization, G.W. and M.B.; Methodology, G.W. and M.B.; Investigation, M.B. and G.W.; Visualization, M.B. and G.W.; Writing—review and editing, G.W. and M.B. All authors have read and agreed to the published version of the manuscript.

Funding: This research received no external funding.

Institutional Review Board Statement: Not applicable.

Informed Consent Statement: Not applicable.

Data Availability Statement: The dataset is available on request from the authors.

Acknowledgments: This work was carried out during the course of my doctoral studies. ChatGPT version 3.5 was used for the refinement and rephrasing of the text.

Conflicts of Interest: The authors declare no conflicts of interest.

References

1. Drumea, P. Energy Losses in Hydraulic Systems. Articol Hidrolica Digitala-Iasi, FLUIDAS. 2001. Available online: https://fluidas.ro/wp-content/uploads/Articol-Hidraulica-digitala-iasi-Drumea.pdf (accessed on 16 October 2025).
2. Helbig, A. Electro-Hydrostatic Actuation Proves Itself in Next-Generation Machines. Moog Industrial Newsletter. 2015. Available online: https://www.moog.com/literature/ICD/moogindustrialnewsletterissue36.pdf (accessed on 16 October 2025).
3. Qu, S.; Fassbender, D.; Vacca, A.; Busquets, E. A high-efficient solution for electro-hydraulic actuators with energy regeneration capability. *Energy* **2021**, *216*, 119291. [CrossRef]
4. Wang, H.; Huang, Y.; Khajepour, A.; Hu, C.; Khajepour, A. *Electrification of Heavy-Duty Construction Vehicles*; Springer: Cham, Switzerland, 2018.
5. Hager, W.H.; Boes, R.M. Hydraulic structures: A positive outlook into the future. *J. Hydraul. Res.* **2014**, *52*, 299–310. [CrossRef]
6. Chiara, F.; Canova, M. A review of energy consumption, management, and recovery in automotive systems, with considerations of future trends. *Proc. Inst. Mech. Eng. Part D J. Automob. Eng.* **2013**, *227*, 914–936. [CrossRef]
7. Olson, E. Digital Transformation and AI in Energy Systems: Applications, Challenges, and the Path Forward. In *Digital Sustainability: Leveraging Digital Technology to Combat Climate Change*; Springer Nature: Cham, Switzerland, 2024; pp. 63–79.
8. Cundiff, J.S. *Fluid Power Circuits and Controls: Fundamentals and Applications*; CRC Press: Boca Raton, FL, USA, 2001.
9. Shen, W.; Jiang, J.; Su, X.; Karimi, H.R. Control strategy analysis of the hydraulic hybrid excavator. *J. Frankl. Inst.* **2015**, *352*, 541–561. [CrossRef]
10. Lin, T.; Huang, W.; Ren, H.; Fu, S.; Liu, Q. New compound energy regeneration system and control strategy for hybrid hydraulic excavators. *Autom. Constr.* **2016**, *68*, 11–20. [CrossRef]
11. Sugimura, K.; Murrenhoff, H. Hybrid load sensing—displacement controlled architecture for excavators. In Proceedings of the14th Scandinavian International Conference on Fluid Power, Tampere, Finland, 20–22 May 2015; pp. 20–22.
12. Cheng, M.; Xu, B.; Zhang, J.; Ding, R. Pump-Based Compensation for Dynamic Improvement of the Electrohydraulic Flow Matching System. *IEEE Trans. Ind. Electron.* **2017**, *64*, 2903–2913. [CrossRef]
13. Wang, B. High Speed On-Off Valve Self-adapting Clamping System. *J. Appl. Sci.* **2014**, *14*, 279–284. [CrossRef]
14. Shen, W.; Jiang, J. Analysis and development of the hydraulic secondary regulation system based on the CPR. In Proceedings of the 2011 International Conference on Fluid Power and Mechatronics, Beijing, China, 17–20 August 2011. [CrossRef]
15. Alemdaroglu, U.; Guler, Z.; Sevim, S.; Dalkiran, F. Energy efficiency by reducing throttling losses in hydraulic systems. *J. Mechatronics Artif. Intell. Eng.* **2023**, *4*, 1–7. [CrossRef]
16. Understanding Hydraulic Leaks: Causes, Impacts, Detection, and Solutions for Hydraulic Fluid Loss—SHUNTEC — shuntec-press.com. Available online: https://www.shuntecpress.com/blog/hydraulic-leak-causes-impacts-solutions/ (accessed on 22 September 2025).
17. Vukovic, M.; Leifeld, R.; Murrenhoff, H. Reducing Fuel Consumption in Hydraulic Excavators—A Comprehensive Analysis. *Energies* **2017**, *10*, 687. [CrossRef]
18. He, A.; Wei, L.; Lu, Q.; He, P. An Investigation of Energy Consumption Characteristics of the Pump-Control System for Electric Excavator Arms. *Appl. Sci.* **2024**, *14*, 10791. [CrossRef]
19. Shen, W.; Jiang, J.; Su, X.; Karimi, H.R. Energy-Saving Analysis of Hydraulic Hybrid Excavator Based on Common Pressure Rail. *Sci. World J.* **2013**, *2013*, 560694. [CrossRef] [PubMed]
20. Ge, L.; Quan, L.; Zhang, X.; Zhao, B.; Yang, J. Efficiency improvement and evaluation of electric hydraulic excavator with speed and displacement variable pump. *Energy Convers. Manag.* **2017**, *150*, 62–71. [CrossRef]
21. Rydberg, K.E. Energy efficient hydraulics: System solutions for loss minimization. In Proceedings of the National Conference on Fluid Power, "Hydraulikdagar'15", Linköping, Sweden, 16–17 March 2015.
22. Schmidt, L.; van Binsbergen-Galán, M.; Knöll, R.; Riedmann, M.; Schneider, B.; Heemskerk, E. Energy Efficient Excavator Implement by Electro-Hydraulic/Mechanical Drive Network. *Int. J. Fluid Power* **2024**, *25*, 413–438. [CrossRef]
23. Qiao, S.; Quan, L.; Hao, Y.; Ge, L.; Xia, L. Design and characteristic research of a novel electromechanical-hydraulic hybrid actuator with two transmission mechanisms. *Front. Mech. Eng.* **2023**, *18*, 19. [CrossRef]
24. Shi, C.; Wang, W.; Wang, S.; Liu, D.; Zhao, S. Dynamic Heat Exchange Law Analysis Between the Permanent Magnet Synchronous Motor and Closed Hydraulic System of Wet Electro-hydrostatic Actuator. *Arab. J. Sci. Eng.* **2025**, *50*, 18759–18776. [CrossRef]
25. Schmidt, L.; van Binsbergen-Galán, M. Electro-Hydraulic Variable-Speed Drive Network Technology—First Experimental Validation. *Energies* **2024**, *17*, 3192. [CrossRef]
26. Helbig, A. *Electro-Hydrostatic Actuation: An Attractive Energy-Efficient Option for Machine Builders*; White Paper; Moog Inc.: Elma, NY, USA, 2014. Available online: https://www.moog.com/content/dam/moog/literature/ICD/Moog-Actuators-EHA-Whitepaper-en.pdf (accessed on 16 October 2025).

27. Du, C.; Plummer, A.R.; Johnston, D.N. Performance analysis of a new energy-efficient variable supply pressure electro-hydraulic motion control method. *Control Eng. Pract.* **2017**, *60*, 87–98. [CrossRef]
28. Hagen, D.; Padovani, D.; Choux, M. Enabling Energy Savings in Offshore Mechatronic Systems by using Self-Contained Cylinders. *Model. Identif. Control* **2019**, *40*, 89–108. [CrossRef]
29. Chiang, M.H.; Yeh, Y.P.; Yang, F.L.; Chen, Y.N. Integrated control of clamping force and energy-saving in hydraulic injection moulding machines using decoupling fuzzy sliding-mode control. *Int. J. Adv. Manuf. Technol.* **2005**, *27*, 53–62. [CrossRef]
30. Cho, S.H.; Noskievič, P. Position tracking control with load-sensing for energy-saving valve-controlled cylinder system. *J. Mech. Sci. Technol.* **2012**, *26*, 617–625. [CrossRef]
31. Yoon, J.I.; Truong, D.Q.; Ahn, K.K. A generation step for an electric excavator with a control strategy and verifications of energy consumption. *Int. J. Precis. Eng. Manuf.* **2013**, *14*, 755–766. [CrossRef]
32. Wang, W.; Wang, B. An energy-saving control strategy with load sensing for electro-hydraulic servo systems. *Stroj. Vestnik/J. Mech. Eng.* **2016**, *62*, 709–716. [CrossRef]
33. Lovrec, D.; Kastrevc, M.; Ulaga, S. Electro-hydraulic load sensing with a speed-controlled hydraulic supply system on forming-machines. *Int. J. Adv. Manuf. Technol.* **2009**, *41*, 1066–1075. [CrossRef]
34. Li, Z.; Song, J.; Huang, Y.; Li, Y.; Chen, J. Design and analysis for a new energy-saving hydraulic pumping unit. *Proc. Inst. Mech. Eng. Part C J. Mech. Eng. Sci.* **2018**, *232*, 2119–2131. [CrossRef]
35. Nguyen, T.H.; Do, T.C.; Ahn, K.K. A study on a new independent metering valve for hydraulic boom excavator. *Appl. Sci.* **2022**, *12*, 605. [CrossRef]
36. Liu, S.; Yao, B. Coordinate control of energy saving programmable valves. *IEEE Trans. Control Syst. Technol.* **2008**, *16*, 34–45. [CrossRef]
37. Gong, J.; Zhang, D.; Liu, C.; Zhao, Y.; Hu, P.; Quan, W. Optimization of electro-hydraulic energy-savings in mobile machinery. *Autom. Constr.* **2019**, *98*, 132–145. [CrossRef]
38. Wrat, G.; Das, J. Energy saving in off-road vehicles using leakage compensation technique. *arXiv* **2025**, arXiv:2509.20926. [CrossRef]
39. Axin, M.; Eriksson, B.; Krus, P. Flow versus pressure control of pumps in mobile hydraulic systems. *Proc. Inst. Mech. Eng. Part I J. Syst. Control Eng.* **2014**, *228*, 245–256. [CrossRef]
40. Lu, L.; Yao, B.; Liu, Z. Energy saving control of a hydraulic manipulator using five cartridge valves and one accumulator. *Ifac Proc. Vol.* **2013**, *46*, 84–90. [CrossRef]
41. Ding, R.; Zhang, J.; Xu, B.; Cheng, M.; Pan, M. Energy efficiency improvement of heavy-load mobile hydraulic manipulator with electronically tunable operating modes. *Energy Convers. Manag.* **2019**, *188*, 447–461. [CrossRef]
42. Wang, H.; Feng, Z. A Review of Flow Saturation Resistant Techniques in Multi-actuators Load Sensing Hydraulic System. *J. Eng. Mech. Mach.* **2023**, *8*, 42–51. [CrossRef]
43. Eriksson, B.; Palmberg, J.O. Individual metering fluid power systems: Challenges and opportunities. *Proc. Inst. Mech. Eng. Part I J. Syst. Control Eng.* **2011**, *225*, 196–211. [CrossRef]
44. Heikkilä, M.; Linjama, M. Displacement control of a mobile crane using a digital hydraulic power management system. *Mechatronics* **2013**, *23*, 452–461. [CrossRef]
45. Huova, M.; Aalto, A.; Linjama, M.; Huhtala, K.; Lantela, T.; Pietola, M. Digital hydraulic multi-pressure actuator–the concept, simulation study and first experimental results. *Int. J. Fluid Power* **2017**, *18*, 141–152. [CrossRef]
46. Busquets, E.; Ivantysynova, M. Temperature prediction of displacement controlled multi-actuator machines. *Int. J. Fluid Power* **2013**, *14*, 25–36. [CrossRef]
47. Larsson, L.V.; Lejonberg, R.; Ericson, L. Optimisation of a Pump-Controlled Hydraulic System using Digital Displacement Pumps. *Int. J. Fluid Power* **2022**, 53–78.
48. Rampen, W.; Munko, M.J.; Dubon, S.L.; Cuthill, F. Regenerative Structural Fatigue Testing with Digital Displacement Pump/Motors. *Actuators* **2025**, *14*, 103. [CrossRef]
49. Choi, K.; Seo, J.; Nam, Y.; Kim, K.U. Energy-saving in excavators with application of independent metering valve. *J. Mech. Sci. Technol.* **2015**, *29*, 387–395. [CrossRef]
50. Pan, M.; Plummer, A.; El Agha, A. Theoretical and experimental studies of a switched inertance hydraulic system in a four-port high-speed switching valve configuration. *Energies* **2017**, *10*, 780. [CrossRef]
51. Yuan, C.; Plummer, A.; Pan, M. Switching characteristics of a high-speed rotary valve for switched inertance hydraulic converters. *Proc. Inst. Mech. Eng. Part I J. Syst. Control Eng.* **2022**, *236*, 1421–1441. [CrossRef]
52. Do, T.C.; Nguyen, D.G.; Dang, T.D.; Ahn, K.K. A boom energy regeneration system of hybrid hydraulic excavator using energy conversion components. *Actuators* **2020**, *10*, 1. [CrossRef]
53. Yue, D.; Gao, H.; Liu, Z.; Wei, L.; Liu, Y.; Zuo, X. Potential energy recovery and direct reuse system of hydraulic hybrid excavators based on the digital pump. *Energies* **2023**, *16*, 5229. [CrossRef]

54. Li, W.; Wu, B.; Cao, B. Control strategy of a novel energy recovery system for parallel hybrid hydraulic excavator. *Adv. Mech. Eng.* **2015**, *7*, 1687814015613769. [CrossRef]
55. Yu, Y.X.; Ahn, K.K. Energy regeneration and reuse of excavator swing system with hydraulic accumulator. *Int. J. Precis. Eng. -Manuf.-Green Technol.* **2020**, *7*, 859–873. [CrossRef]
56. Wrat, G.; Ranjan, P.; Jose, J.T.; Kumar, R. Innovative Energy-Saving Techniques in Construction and Heavy Machinery. In *AI-Driven Environmental Pollution Management*; Springer: Cham, Switzerland, 2025; pp. 267–277.
57. Cao, H. Kinetic energy recovery and reuse of traveling drive system of hybrid hydraulic electric loader. *Adv. Mech. Eng.* **2025**, *17*, 16878132251322027. [CrossRef]
58. Macor, A.; Benato, A.; Rossetti, A.; Bettio, Z. Study and simulation of a hydraulic hybrid powertrain. *Energy Procedia* **2017**, *126*, 1131–1138. [CrossRef]
59. Minav, T.; Hänninen, H.; Sinkkonen, A.; Laurila, L.; Pyrhönen, J. Electric or hydraulic energy recovery systems in a reach truck—A comparison. *Stroj. Vestn./J. Mech. Eng.* **2014**, *60*, 232–240. [CrossRef]
60. Costa, G.K.; Sepehri, N. Hydraulic accumulators in energy efficient circuits. *Front. Mech. Eng.* **2023**, *9*, 1163293. [CrossRef]
61. Ranjan, P.; Bhola, M.; Wrat, G.; Mishra, S.K.; Das, J. Performance enhancement of hybrid hydraulic excavator using multiple hydro-pneumatic accumulators. *Proc. Inst. Mech. Eng. Part I J. Syst. Control Eng.* **2020**, *234*, 1133–1149. [CrossRef]
62. Singh, S.; Kumar, A.; Thakur, S. Development of an Accumulator-Based Energy Regenerative Technology (AERT) for the Hydraulic Swing Mechanism of an Excavator Machine. In *Proceedings of the Conference on Fluid Mechanics and Fluid Power*; Springer: Berlin/Heidelberg, Germany, 2023; pp. 221–232.
63. Latas, W.; Stojek, J. A new type of hydrokinetic accumulator and its simulation in hydraulic lift with energy recovery system. *Energy* **2018**, *153*, 836–848. [CrossRef]
64. Yang, C.; Zhou, L.; Wang, J.; Xu, T.; Yang, C.; Ye, G. Research on energy saving system of hydraulic excavator based on three-chamber accumulator. *J. Energy Storage* **2023**, *72*, 108571. [CrossRef]
65. Liu, Y.; Xu, Z.; Hua, L.; Zhao, X. Analysis of energy characteristic and working performance of novel controllable hydraulic accumulator with simulation and experimental methods. *Energy Convers. Manag.* **2020**, *221*, 113196. [CrossRef]
66. Amrhein, J.; Neumann, U. PRB—Regeneration of potential energy while boom-down. In Proceedings of the 8th International Fluid Power Conference, Dresden, Germany, 26–28 March 2012; Volume 2, pp. 69–72.
67. Joo, C.; Stangl, M. Application of Power Regenerative Boom system to excavator. *Int. Fluid Power Conf.* **2016**, *3*, 175–184.
68. Casoli, P.; Riccò, L.; Campanini, F.; Bedotti, A. Hydraulic hybrid excavator—Mathematical model validation and energy analysis. *Energies* **2016**, *9*, 1002. [CrossRef]
69. Liang, T.; Quan, L.; Ge, L.; Xia, L.; Wang, C. An energy-saving scheme to reduce throttling losses in hydraulic excavators based on electro-hydraulic energy storage. *IEEE Access* **2024**, *12*, 125043–125056. [CrossRef]
70. Hao, Y.; Quan, L.; Cheng, H.; Xia, L.; Ge, L.; Zhao, B. Potential energy directly conversion and utilization methods used for heavy duty lifting machinery. *Energy* **2018**, *155*, 242–251. [CrossRef]
71. Xia, L.; Quan, L.; Ge, L.; Hao, Y. Energy efficiency analysis of integrated drive and energy recuperation system for hydraulic excavator boom. *Energy Convers. Manag.* **2018**, *156*, 680–687. [CrossRef]
72. Li, Z.; Wang, C.; Quan, L.; Hao, Y.; Ge, L.; Xia, L. Study on energy efficiency characteristics of the heavy-duty manipulator driven by electro-hydraulic hybrid active-passive system. *Autom. Constr.* **2021**, *125*, 103646. [CrossRef]
73. Jun, G.; Daqing, Z.; Yong, G.; Zhongyong, T.; Changsheng, L.; Peng, H.; Yuming, Z.; Weicai, Q.; Yongping, J. Potential energy recovery method based on alternate recovery and utilization of multiple hydraulic cylinders. *Autom. Constr.* **2020**, *112*, 103105. [CrossRef]
74. Mu, H.; Luo, Y.; Luo, Y.; Chen, L. Numerical analysis of energy recovery of hybrid loader actuators based on parameters optimization. *Actuators* **2022**, *11*, 260. [CrossRef]
75. Yao, J.; He, X.; Yang, Y.; Zhu, Y.; Xiao, G.; Huang, Y. Design and Analysis of a Novel Hydraulic Energy Storage Component. *Machines* **2025**, *13*, 325. [CrossRef]
76. Lin, T.; Wang, Q. Hydraulic accumulator-motor-generator energy regeneration system for a hybrid hydraulic excavator. *Chin. J. Mech. Eng.* **2012**, *25*, 1121–1129. [CrossRef]
77. Pavel, I.; Matache, G.; Șefu, Ș.M. Recovery of Potential Energy by Using a Digital Hydraulic Cylinder. *Hidraulica* **2024**, *3*, 74–79.
78. Zhou, H.; Xu, Z.; Liu, L.; Liu, D.; Zhang, L. Modelling and Control of a Novel Hydraulic Hybrid Vehicle with Wheel Motors. In Proceedings of the 2018 IEEE International Conference on Mechatronics and Automation (ICMA), Changchun, China, 5–8 August 2018; pp. 1985–1990.
79. He, X.; Liu, H.; He, S.; Hu, B.; Xiao, G. Research on the energy efficiency of energy regeneration systems for a battery-powered hydrostatic vehicle. *Energy* **2019**, *178*, 400–418. [CrossRef]
80. Bender, F.A.; Bosse, T.; Sawodny, O. An investigation on the fuel savings potential of hybrid hydraulic refuse collection vehicles. *Waste Manag.* **2014**, *34*, 1577–1583. [CrossRef]

81. Wang, H.; Huang, Y.; Khajepour, A.; He, H.; Cao, D. A novel energy management for hybrid off-road vehicles without future driving cycles as a priori. *Energy* **2017**, *133*, 929–940. [CrossRef]
82. Beltrami, D.; Iora, P.; Tribioli, L.; Uberti, S. Electrification of compact off-highway vehicles—overview of the current state of the art and trends. *Energies* **2021**, *14*, 5565. [CrossRef]
83. Journal, F.P. Electrification & Hybrid Trends in Heavy Construction Equipment—Fluidpowerjournal.com. Available online: https://fluidpowerjournal.com/electrification-hybrid-trends-in-heavy-construction-equipment/ (accessed on 1 October 2025).
84. Lin, T.; Wang, Q.; Hu, B.; Gong, W. Development of hybrid powered hydraulic construction machinery. *Autom. Constr.* **2010**, *19*, 11–19. [CrossRef]
85. Sprengel, M.; Bleazard, T.; Haria, H.; Ivantysynova, M. Implementation of a novel hydraulic hybrid powertrain in a sports utility vehicle. *IFAC-PapersOnLine* **2015**, *48*, 187–194. [CrossRef]
86. Wang, Z.; Jiao, X.; Pu, Z.; Han, L. Energy recovery and reuse management for fuel-electric-hydraulic hybrid powertrain of a construction vehicle. *IFAC-PapersOnLine* **2018**, *51*, 390–393. [CrossRef]
87. Somà, A. Trends and hybridization factor for heavy-duty working vehicles. *Hybrid Electr. Veh.* **2017**, 3–32. [CrossRef]
88. Truong, D.Q.; Marco, J.; Greenwood, D.; Harper, L.; Corrochano, D.; Yoon, J. Challenges of micro/mild hybridisation for construction machinery and applicability in UK. *Renew. Sustain. Energy Rev.* **2018**, *91*, 301–320. [CrossRef]
89. Stein, G.; Fröberg, A.; Martinsson, J.; Brattberg, B.; Filla, R.; Unnebäck, J. Fuel efficiency in construction equipment-optimize the machine as one system. In Proceedings of the 7th AVL International Commercial Powertrain Conference, AVL & SAE, Graz, Austria, 22–23 May 2013; p. 8.
90. Filla, R. Alternative system solutions for wheel loaders and other construction equipment. In Proceedings of the 1st CTI Forum Alternative, Electric and Hybrid Drive Trains, Berlin, Germany, 1–2 December 2008.
91. Available online: https://www.machinio.com/ (accessed on 15 December 2025).
92. Bertini, A.; Ceraolo, M.; Lutzemberger, G. Systematic approach in the hybridization of a hydraulic skid loader. *Autom. Constr.* **2015**, *58*, 144–154. [CrossRef]
93. Bravo, R.R.S.; De Negri, V.J.; Oliveira, A.A.M. Design and analysis of a parallel hydraulic–pneumatic regenerative braking system for heavy-duty hybrid vehicles. *Appl. Energy* **2018**, *225*, 60–77. [CrossRef]
94. Trajkovic, S. The Pneumatic Hybrid Vehicle-A New Concept for Fuel Consumption Reduction. 2010. Available online: https://www.lunduniversity.lu.se/lup/publication/b39e24a1-59f4-4018-8253-f60975126a03 (accessed on 16 October 2025).
95. Kim, Y.J.; Filipi, Z. Simulation study of a series hydraulic hybrid propulsion system for a light truck. *SAE Trans.* **2007**, *116*, 147–161.
96. Committee to Assess Fuel Economy Technologies for Medium- and Heavy-Duty Vehicles; Board on Energy and Environmental Systems; Division on Engineering and Physical Sciences; Transportation Research Board; National Research Council. *Technologies and Approaches to Reducing the Fuel Consumption of Medium-and Heavy-Duty Vehicles*; National Academies Press: Washington, DC, USA, 2010. [CrossRef]
97. U.S. Environmental Protection Agency (EPA). Electric vehicle myths. In *EPA Green Vehicle Guide*; U.S. Environmental Protection Agency (EPA): Washington, DC, USA, 2025. Available online: https://www.epa.gov/greenvehicles/electric-vehicle-myths (accessed on 16 October 2025).
98. Bhola, M.; Kumar, N.; Ghoshal, S. Reducing fuel consumption of Front End Loader using regenerative hydro-static drive configuration-an experimental study. *Energy* **2018**, *162*, 158–170. [CrossRef]
99. Lyu, C.; Yanqing, Z.; Meng, L. Loader power-split transmission system based on a planetary gear set. *Adv. Mech. Eng.* **2018**, *10*, 1687814017747735. [CrossRef]
100. Bhola, M.; Kumar, A.; Kumar, N. Energy-efficient control of hydrostatic transmission of a front-end loader machine using machine learning algorithm and its sensitivity analysis. *Proc. Inst. Mech. Eng. Part D J. Automob. Eng.* **2023**, *237*, 3031–3053. [CrossRef]
101. Ghoshal, S.K.; Pandey, A.K.; Dasgupta, K.; Bhola, M. A segmental pump-motor control scheme to attain targeted speed under varying load demand of a hydraulic drive used in heavy earth movers. *Mechatronics* **2021**, *80*, 102681. [CrossRef]
102. Kumar, N.; Bhola, M.; Singh, V.P. Displacement control optimization of hydro-static transmission system containing variable displacement pump and hydro-motor of a front-end loader. *Proc. Inst. Mech. Eng. Part D J. Automob. Eng.* **2025**, *239*, 6184–6204. [CrossRef]
103. Gottschalk, M.; Jacobs, G.; Kramer, A. Test method for evaluating the energy efficiency of wheel loaders. *Atzoffhighway Worldw.* **2018**, *11*, 44–49. [CrossRef]
104. Xiong, S.; Wilfong, G.; Lumkes, J., Jr. Components sizing and performance analysis of hydro-mechanical power split transmission applied to a wheel loader. *Energies* **2019**, *12*, 1613. [CrossRef]
105. Krauss, A.; Ivantysynova, M. Power split transmissions versus hydrostatic multiple motor concepts–A comparative analysis. *SAE Trans.* **2004**, *113*, 403–414.

106. Sannelius, M.; Rydberg, K.E.; Palmberg, J.O. Hydrostatic Transmissions for Wheel Loaders-An Experimental Study of Amultiple-Motor Concept. In Proceedings of the JFPS International Symposium on Fluid Power, Toyama, Japan, 15–18 September 2008; The Japan Fluid Power System Society: Tokyo, Japan, 1999; Volume 1999, pp. 499–506.
107. Sun, C. Hydrostatic-Mechanical Power Split CVT. Master Thesis, Tampere University of Technology, Tampere, Finland, 2010.
108. Pettersson, K. *Design Automation of Complex Hydromechanical Transmissions*; Linkopings Universitet: Linköping, Sweden, 2013.
109. Mercati, I.S.; Panizzolo, F.; Profumo, G. Power split Hydro-mechanical Variable Transmission (HVT) for off-highway application. *Int. Fluid Power Conf.* **2016**, *8*, 69–80.
110. Liu, X.; Sun, D.; Qin, D.; Liu, J. Achievement of fuel savings in wheel loader by applying hydrodynamic mechanical power split transmissions. *Energies* **2017**, *10*, 1267. [CrossRef]
111. Liu, F.; Wu, W.; Hu, J.; Yuan, S. Design of multi-range hydro-mechanical transmission using modular method. *Mech. Syst. Signal Process.* **2019**, *126*, 1–20. [CrossRef]
112. You, Y.; Sun, D.; Qin, D. Shift strategy of a new continuously variable transmission based wheel loader. *Mech. Mach. Theory* **2018**, *130*, 313–329. [CrossRef]
113. Li, W.; Cao, B.; Zhu, Z.; Chen, G. A novel energy recovery system for parallel hybrid hydraulic excavator. *Sci. World J.* **2014**, *2014*, 184909. [CrossRef] [PubMed]
114. Board on Energy and Environmental Systems; National Academies of Sciences, Engineering, and Medicine. *Reducing Fuel Consumption and Greenhouse Gas Emissions of Medium-and Heavy-Duty Vehicles, Phase Two*; National Academies Press: Washington, DC, USA, 2020.
115. Kakichi, Y.; Pischinger, S.; Schaub, J.; Müller, A.; Kawano, R. Parallel-Series Hybrid Powertrain Concept for a Wheel Loader. In Proceedings of the International MTZ Conference on Heavy-Duty Engines, Stuttgart, Germany, 24–25 May 2022; Springer: Berlin/Heidelberg, Germany, 2022; pp. 120–133.
116. Lin, Z.; Wang, F.; Xu, B. Improving wheel loader energy efficiency with a series electric hybrid powertrain. In Proceedings of the Fluid Power Systems Technology. American Society of Mechanical Engineers, Bath, UK, 14–16 September 2022; Volume 86335, p. V001T01A019.
117. Wang, X.; Wang, Z.; Xie, L.; Wang, S.; Wang, Z.; Ma, W. Research on the new hydrostatic transmission system of wheel loaders based on fuzzy sliding mode control. *Energies* **2024**, *17*, 565. [CrossRef]
118. Wang, F.; Zhang, H.; Sun, D.; Xu, B. An optimal-pressure control strategy for hydrostatic wheel loader. *Proc. Inst. Mech. Eng. Part I J. Syst. Control Eng.* **2023**, *237*, 779–790. [CrossRef]
119. Bertolin, M.; Vacca, A. An energy efficient power-split hybrid transmission system to drive hydraulic implements in construction machines. *J. Dyn. Syst. Meas. Control* **2021**, *143*, 101005. [CrossRef]
120. Baek, S.M.; Kim, W.S.; Kim, Y.S.; Baek, S.Y.; Kim, Y.J. Design of the hydro-mechanical transmission for a 55kW-class agricultural tractor. *J. Drive Control* **2020**, *17*, 19–27.
121. Zhu, Z.; Yang, Y.; Wang, D.; Cai, Y.; Lai, L. Energy saving performance of agricultural tractor equipped with mechanic-electronic-hydraulic powertrain system. *Agriculture* **2022**, *12*, 436. [CrossRef]
122. Sayal, A.; N, C.; Jha, J.; Allagari, N. AI-based predictive maintenance strategies for improving the reliability of green power systems. In *Digital Technologies to Implement the UN Sustainable Development Goals*; Springer: Cham, Switzerland, 2024; pp. 19–46.
123. Smart Sensor Technology—IEEE Digital Reality— digitalreality.ieee.org. Available online: https://digitalreality.ieee.org/publications/smart-sensor-technology (accessed on 8 October 2025).
124. Ha, V.T.; Dan, B. Dual-Layer Predictive Energy Control in High-Speed Trains Using Adaptive Observers. *Int. J. Automot. Technol.* **2025**, 1–22. [CrossRef]
125. Gu, W.; Yao, J.; Yao, Z.; Zheng, J. Output feedback model predictive control of hydraulic systems with disturbances compensation. *ISA Trans.* **2019**, *88*, 216–224. [CrossRef] [PubMed]
126. Wrat, G.; Jose, J.T.; Ranjan, P.; Kumar, R. Sustainable Dozer Technologies by Evaluating Servo and Hydraulic Pilot Actuated Control Systems. In *AI-Driven Environmental Pollution Management*; Springer: Cham, Switzerland, 2025; p. 279.
127. Zhang, J.; Feng, X.; Xiong, S.; Wu, Q. Predictive function optimization control strategy of hydraulic servo system. In Proceedings of the 33rd Chinese Control Conference, Nanjing, China, 28–30 July 2014; pp. 7758–7762.
128. Hagen, D.; Padovani, D.; Choux, M. A Comparison Study of a Novel Self-Contained Electro-Hydraulic Cylinder versus a Conventional Valve-Controlled Actuator—Part 1: Motion Control. *Actuators* **2019**, *8*, 79. [CrossRef]
129. Liem, D.T.; Huy, N.M.; Nam, L.V.; Nu, H.T.M. An adaptive predictor-based control approach for tracking control of a hydraulic actuator system. *Adv. Sci. Technol. Res. J.* **2024**, *18*, 419–436. [CrossRef]
130. Zhang, Q.; Kong, X.; Yu, B.; Ba, K.; Jin, Z.; Kang, Y. Review and development trend of digital hydraulic technology. *Appl. Sci.* **2020**, *10*, 579. [CrossRef]
131. Hu, W.; Jiang, Y. Intelligent control and optimization of hydraulic systems using reinforcement learning. *Neural Comput. Appl.* **2025**, *37*, 28513–28528. [CrossRef]

132. Li, R.; Zhang, Y.; Feng, Z.; Xu, J.; Wu, X.; Liu, M.; Xia, Y.; Sun, Q.; Yuan, W. Review of the progress of energy saving of hydraulic control systems. *Processes* **2023**, *11*, 3304. [CrossRef]
133. Zhao, W.; Ebbesen, M.K.; Hansen, M.R.; Andersen, T.O. Experimental assessment of energy consumption: A comparative study between motor-controlled and valve-controlled cylinders in knuckle boom crane operations. *Front. Mech. Eng.* **2025**, *11*, 1535120. [CrossRef]
134. Abhinandan De, I. Energy Recovery and Reuse in Fluid Power Systems: A Sustainable Engineering Perspective. *J. Recent Trends Electr. Eng.* **2025**, *1*, 20–23.
135. Liu, X. A Review of Potential Energy Recovery and Reutilization Technologies for Hydraulic-Driven Manipulators In Construction Machinery. *Int. J. Mechatron. Appl. Mech.* **2025**, *1*, 59–72. [CrossRef]
136. Bhagwat, P.; Ingale, A.; Jagtap, M.; Chougule, S.; Banhatti, A.; Mangave, S. Enhancing Hydraulic System Performance through Intelligent Control and Energy Efficiency. *Asian Rev. Mech. Eng.* **2024**, *13*, 17–26. [CrossRef]
137. Alenany, A.; Helmi, A.M.; Nasef, B.M. Comprehensive analysis for sensor-based hydraulic system condition monitoring. *Int. J. Adv. Comput. Sci. Appl.* **2021**, *12*, 133–140. [CrossRef]
138. Tao, H.; Jia, P.; Wang, X.; Wang, L. Real-time fault diagnosis for hydraulic system based on multi-sensor convolutional neural network. *Sensors* **2024**, *24*, 353. [CrossRef] [PubMed]
139. Oravec, M.; JadlovskÁ, A. Sensors Fault Diagnosis Algorithm Design of a Hydraulic System. *Acta Electrotech. Inform.* **2017**, *17*, 30–37. [CrossRef]
140. Hagen, D.; Padovani, D.; Choux, M. A Comparison Study of a Novel Self-Contained Electro-Hydraulic Cylinder versus a Conventional Valve-Controlled Actuator—Part 2: Energy Efficiency. *Actuators* **2019**, *8*, 78. [CrossRef]
141. Dietrich, A. Electric Actuators vs. Pneumatic Cylinders: A Comparison Based on Total Cost of Ownership. 2015. Available online: https://www.tolomatic.com/info-center/resource-details/electric-actuators-vs-pneumatic-cylinders/ (accessed on 16 October 2025).
142. qhh. Actuators 101: Pneumatic vs. Electric vs. Hydraulic—Janhenvalve.com. Available online: https://janhenvalve.com/pneumatic-vs-electric-vs-hydraulic-actuators-comparison/ (accessed on 2 December 2025).
143. Pustavrh, J.; Hočevar, M.; Podržaj, P.; Trajkovski, A.; Majdič, F. Comparison of hydraulic, pneumatic and electric linear actuation systems. *Sci. Rep.* **2023**, *13*, 20938. [CrossRef]
144. Hutchinson, T.; Burgess, S.; Herrmann, G. Current hybrid-electric powertrain architectures: Applying empirical design data to life cycle assessment and whole-life cost analysis. *Appl. Energy* **2014**, *119*, 314–329. [CrossRef]
145. Editor. Electric Actuators vs. Pneumatic Cylinders: Total Cost of Ownership—linearmotiontips.com. Available online: https://www.linearmotiontips.com/electric-actuators-vs-pneumatic-cylinders-total-cost-of-ownership/ (accessed on 2 December 2025).
146. Compare Hybrid SHA & Hydraulic Actuation Systems—kyntronics.com. Available online: https://kyntronics.com/brochure/kyntronics-hybrid-electro-hydraulic-actuators-sha-compared-to-hydraulic-actuation-systems-hpu/ (accessed on 2 December 2025).
147. Murphy, C.; Mills, A. *Hybrid Energy Systems: Opportunities for Coordinated Research*; Report No. DOE/GO-102021-5447; National Renewable Energy Laborator: Golden, CO, USA 2021.
148. França, W.T.; Barros, M.V.; Salvador, R.; de Francisco, A.C.; Moreira, M.T.; Piekarski, C.M. Integrating life cycle assessment and life cycle cost: A review of environmental-economic studies. *Int. J. Life Cycle Assess.* **2021**, *26*, 244–274. [CrossRef]
149. Electro-hydraulic Servo Actuator Market Size 2026 | Export Chains, Trends & 2033—linkedin.com. Available online: https://www.linkedin.com/pulse/electro-hydraulic-servo-actuator-market-size-2026-export-bldnc/ (accessed on 2 December 2025).
150. Hydraulic vs. Pneumatic vs. Electric Actuators | Differences—yorkpmh.com. Available online: https://yorkpmh.com/resources/hydraulic-vs-pneumatic-vs-electric-actuators/ (accessed on 2 December 2025).
151. Jurvis, B. Electric Actuators: Revolutionizing Automation in Manufacturing—Accu Tech USA—accu-techusa.com. Available online: https://accu-techusa.com/electric-actuators-revolutionizing-automation-in-manufacturing/ (accessed on 2 December 2025).
152. Are Pneumatic Cylinders Generally Cheaper Compared to Hydraulic or Electric Actuators?- Zhejiang Bangye Automation Technology Co., Ltd—bangye-auto.com. Available online: https://www.bangye-auto.com/news/company-news/are-pneumatic-cylinders-generally-cheaper-compared-to-hydraulic-or-electric-actuators.html (accessed on 2 December 2025).
153. Hybrid Vehicle Maintenance: Info & Tips—naylorsautorepairidaho.com. Available online: https://naylorsautorepairidaho.com/blog/maintenance-tips-hybrid-vehicles (accessed on 2 December 2025).
154. Propfe, B.; Redelbach, M.; Santini, D.J.; Friedrich, H. Cost analysis of plug-in hybrid electric vehicles including maintenance & repair costs and resale values. *World Electr. Veh. J.* **2012**, *5*, 886–895. [CrossRef]
155. Okulich-Kazarin, V.; Artyukhov, A.; Artyukhova, N.; Wołowiec, T.; Skrzypek-Ahmed, S. Charting the Global Energy Economy Research: Trends, Gaps, and Paradigm Shifts. *Energies* **2025**, *18*, 3438. [CrossRef]
156. Ma, A.; Shen, F.; Li, Z.; Peng, X.; Zhong, W. An adjustable robust optimization model under dynamic informer-based framework for industrial renewable energy systems. *Process Saf. Environ. Prot.* **2025**, *197*, 107062. [CrossRef]
157. The Integration of Fluid Power and Electronics-ASME—asme.org. Available online: https://www.asme.org/topics-resources/content/the-forefront-of-electronics-fluid-power (accessed on 13 October 2025).

158. Huang, H.; Jin, R.; Li, L.; Liu, Z. Improving the energy efficiency of a hydraulic press via variable-speed variable-displacement pump unit. *J. Dyn. Syst. Meas. Control* **2018**, *140*, 111006. [CrossRef]
159. Ekman, A.; Börjesson, P. Life cycle assessment of mineral oil-based and vegetable oil-based hydraulic fluids including comparison of biocatalytic and conventional production methods. *Int. J. Life Cycle Assess.* **2011**, *16*, 297–305. [CrossRef]
160. Yang, J.; Quan, L.; Yang, Y. Excavator energy-saving efficiency based on diesel engine cylinder deactivation technology. *Chin. J. Mech. Eng.* **2012**, *25*, 897–904. [CrossRef]
161. Lin, T.; Wang, L.; Huang, W.; Ren, H.; Fu, S.; Chen, Q. Performance analysis of an automatic idle speed control system with a hydraulic accumulator for pure electric construction machinery. *Autom. Constr.* **2017**, *84*, 184–194. [CrossRef]
162. Park, K.S.; Kim, S.I.; Jeong, H.J. Low Idle Control System of Construction Equipment and Automatic Control Method Thereof. U.S. Patent US20130289834A1, 31 October 2013.
163. Ericson, L.; Krus, P. *Advancements in Fluid Power Technology: Sustainability, Electrification, and Digitalization: Proceedings of the Global Fluid Power Society PhD Symposium 2024*; Springer Nature: Cham, Switzerland, 2025.
164. Patroncini, P. Electrifying Fluid Power: Advancing Smarter and More Sustainable Machines—powermotiontech.com. Available online: https://www.powermotiontech.com/hydraulics/article/55235414/zapi-group-electrifying-fluid-power-advancing-smarter-and-more-sustainable-machines (accessed on 13 October 2025).
165. Schmitz, K. Digital, Reliable, Sustainable–Recent Innovations in Fluid Power. *Chem. Eng. Technol.* **2023**, *46*, 4. [CrossRef]
166. Reimagining Fluid Power: Smart, Sustainable, and Ready for the Future—Design-engineering.com. Available online: https://www.design-engineering.com/features/reimagining-fluid-power-smart-sustainable-and-ready-for-the-future/ (accessed on 13 October 2025).
167. Roth, D.; Jacobs, G.; Pietrzyk, T.; Schmitz, K. Decentralized compact hydraulic power supply by high speed components. *Atzheavy Duty Worldw.* **2019**, *12*, 66–71. [CrossRef]
168. Journal, F.P. Compact Hydraulics Is on the Move—fluidpowerjournal.com. Available online: https://fluidpowerjournal.com/compact-hydraulics-is-on-the-move/ (accessed on 13 October 2025).
169. Roberts, D.C.; Li, H.; Steyn, J.L.; Yaglioglu, O.; Spearing, S.M.; Schmidt, M.A.; Hagood, N.W. A piezoelectric microvalve for compact high-frequency, high-differential pressure hydraulic micropumping systems. *J. Microelectromech. Syst.* **2003**, *12*, 81–92. [CrossRef]
170. Yao, J.; Yin, Y.; Dong, Z.; He, Y. Design of a 70 MPa two-way proportional cartridge valve for large-size hydraulic forging press. *J. Beijing Inst. Technol.* **2020**, *29*, 260–272.
171. Heyden, E.; Hofmann, U.; Meboldt, M.; Krause, D. A compact adjustable hydraulic damper with symmetric high load behavior enabled by selective laser melting. *J. Low Freq. Noise Vib. Act. Control* **2023**, *42*, 1699–1717. [CrossRef]
172. Olszak, A.; Osowski, K.; Musiałek, I.; Rogoś, E.; Kęsy, A.; Kęsy, Z. Application of plant oils as ecologically friendly hydraulic fluids. *Appl. Sci.* **2020**, *10*, 9086. [CrossRef]
173. Sustainability in Hydraulics: Innovations Driving the Green Revolution | Hydraulics Direct—hydraulicsdirect.com. Available online: https://www.hydraulicsdirect.com/articles-hd/sustainability-in-hydraulics-innovations-driving-the-green-revolution. (accessed on 13 October 2025).
174. Gunawidjaja, R.; Nawani, P.; Eilers, H. High Performance Environmentally Acceptable Hydraulic Fluid. U.S. Patent 10,190,067, 29 January 2019.
175. Héry, C.; Battersby, N. Development and applications of environmentally acceptable hydraulic fluids. *SAE Trans.* **1998**, *107*, 63–74.
176. *ISO 15380:2023*; Lubricants, Industrial Oils and Related Products (Class L) — Family H (Hydraulic Systems) — Specifications for Hydraulic fluids in Categories HETG, HEPG, HEES and HEPR. ISO: Geneva, Switzerland, 2023. Available online: https://www.iso.org/standard/82967.html (accessed on 16 October 2025).
177. *ISO 4413:2010*; Hydraulic Fluid Power — General Rules and Safety Requirements for Systems and Their Components. ISO: Geneva, Switzerland, 2010. Available online: https://www.iso.org/standard/44781.html (accessed on 8 December 2025).
178. Schirn, A. ISO 13849-1:2023—Safety Of Machinery—ANSI Blog—blog.ansi.org. Available online: https://blog.ansi.org/ansi/iso-13849-1-2023-safety-of-machinery/?ad_acct=0000&gad_source=1&gad_campaignid=297602184&gbraid=0AAAAAD_gXFX-nvhEnaIuWkWM6Ym49GX-l&gclid=Cj0KCQiAi9rJBhCYARIsALyPDtuRLEJZsEG0peuP4H-TS5ynUE2BOc_NmCjscQ-1X6b0J-GfObEc_lYaAlBmEALw_wcB (accessed on 8 December 2025).
179. IEC 61508 Functional Safety Services. TÜV SÜD. 2025. Available online: https://www.tuvsud.com/en-us/services/functional-safety/iec-61508 (accessed on 8 December 2025).
180. *ISO 1219-1:2012*; Fluid Power Systems and Components—Graphical Symbols and Circuit Diagrams—Part 1: Graphical Symbols for Conventional Use and Data-processing Applications. ISO: Geneva, Switzerland, 2012. Available online: https://www.iso.org/standard/60184.html (accessed on 8 December 2025).
181. ISO Cleanliness Guidelines for Hydraulic & Lube Oils | Valin—valin.com. Available online: https://www.valin.com/resources/blog/iso-cleanliness-guidelines-hydraulic-lube-oils (accessed on 8 December 2025).

182. *ISO 11171:2022*; Hydraulic Fluid Power—Calibration of Automatic Particle Counters for Liquids. ISO: Geneva, Switzerland, 2022. Available online: https://www.iso.org/standard/82850.html (accessed on 8 December 2025).
183. *ISO 18752:2025*; Rubber Hoses and Hose Assemblies—Wire- or Textile-Reinforced Single-Pressure Types for Hydraulic Applications—Specification. ISO: Geneva, Switzerland, 2025. Available online: https://www.iso.org/standard/89310.html (accessed on 8 December 2025).
184. *ISO 8434-1:2018*; Metallic Tube Connections for Fluid Power and General Use—Part 1: 24° Cone Connectors. ISO: Geneva, Switzerland, 2018. Available online: https://www.iso.org/standard/62079.html (accessed on 8 December 2025).
185. Rockwell Automation. *IEC 62443: Ultimate OT Security Guide*; Rockwell Automation: Tokyo, Japan, 2025. Available online: https://www.rockwellautomation.com/en-dk/company/news/blogs/iec-62443-security-guide.html (accessed on 8 December 2025).
186. Danfoss Documentation Online-Product Documentation, Cases | Danfoss—danfoss.com. Available online: https://www.danfoss.com/en/service-and-support/documentation/ (accessed on 8 December 2025).
187. Industrial Hydraulics—boschrexroth.com. Available online: https://www.boschrexroth.com/en/us/products/industrial-solutions/industrial-hydraulics/ (accessed on 8 December 2025).
188. Parker Hydraulic Filter Division Europe. FDCB805UK—Parker Hydraulic Filter Division Europe (PDF). n.d. Available online: https://www.parker.com/content/dam/Parker-com/Literature/Hydraulic-Filter-Division-Europe/Websphere-Literature/FDCB805UK-.pdf (accessed on 6 December 2025).
189. *ISO 13849-2:2012*; Safety of Machinery—Safety-Related Parts of Control Systems. Part 2: Validation. ISO: Geneva, Switzerland, 2012.
190. Murru, C.; Badía-Laíño, R.; Díaz-García, M.E. Oxidative stability of vegetal oil-based lubricants. *ACS Sustain. Chem. Eng.* **2021**, *9*, 1459–1476. [CrossRef]
191. Wang, Z.; Wang, J.; Li, Z.; Li, W.; Jiao, L.; Long, Y.; Hao, Y. Recent Advances in Mitigating PourPoint Limitations of Biomass-Based Lubricants. *Lubricants* **2025**, *13*, 524. [CrossRef]
192. Salimon, J.; Salih, N.; Yousif, E. Improvement of pour point and oxidative stability of synthetic ester basestocks for biolubricant applications. *Arab. J. Chem.* **2012**, *5*, 193–200. [CrossRef]
193. Deuster, S.; Schmitz, K. Bio-based hydraulic fluids and the influence of hydraulic oil viscosity on the efficiency of mobile machinery. *Sustainability* **2021**, *13*, 7570. [CrossRef]
194. Solano, B.; Laloy, J.; Rotinat-Libersa, C. Compact and lightweight hydraulic actuation system for high performance millimeter scale robotic applications: Modeling and experiments. In Proceedings of the Smart Materials, Adaptive Structures and Intelligent Systems, Philadelphia, PA, USA, 28 September–1 October 2010; Volume 44168, pp. 405–411.
195. Stosiak, M.; Towarnicki, K.; Skačkauskas, P.; Karpenko, M. Reducing Pressure Pulsation and Noise in Micro-Hydraulic Systems of Machine Equipment. *Machines* **2025**, *13*, 981. [CrossRef]
196. Sam Hayford, I.; Li, J.; Tergu, C.T.; Zhang, J. Global evolution of energy efficiency fostering green growth: Knowledge gap, trends, and future prospects. A bibliometric analysis. *Environ. Dev. Sustain.* **2025**, 1–34. [CrossRef]
197. Jabbar, M.; Raoof, S.S. Applications of Machine Learning for Renewable Energy: Issues, Challenges, and Future Directions. In *Handbook of Smart Energy Systems*; Springer: Cham, Switzerland, 2023; pp. 735–747.
198. Zakaria, P. Leveraging Artificial Intelligence for Environmental Sustainability and Energy Efficiency: Opportunities, Challenges, and Future Directions. In *Tech Transformation and AI Readiness: Pioneering Paths for the Global South*; Springer: Cham, Switzerland, 2025; pp. 101–112.
199. Quan, Z.; Ge, L.; Wei, Z.; Li, Y.W.; Quan, L. A survey of powertrain technologies for energy-efficient heavy-duty machinery. *Proc. IEEE* **2021**, *109*, 279–308. [CrossRef]
200. Khan, A.U.; Huang, L. Toward zero emission construction: A comparative life cycle impact assessment of diesel, hybrid, and electric excavators. *Energies* **2023**, *16*, 6025. [CrossRef]
201. Wang, H.; Blaabjerg, F. Power electronics reliability: State of the art and outlook. *IEEE J. Emerg. Sel. Top. Power Electron.* **2020**, *9*, 6476–6493. [CrossRef]
202. Hu, B.; Gonzalez, J.O.; Ran, L.; Ren, H.; Zeng, Z.; Lai, W.; Gao, B.; Alatise, O.; Lu, H.; Bailey, C.; et al. Failure and reliability analysis of a SiC power module based on stress comparison to a Si device. *IEEE Trans. Device Mater. Reliab.* **2017**, *17*, 727–737. [CrossRef]
203. Filo, G. Artificial intelligence methods in hydraulic system design. *Energies* **2023**, *16*, 3320. [CrossRef]
204. Talaat, M.; Tayseer, M.; Farahat, M.A.; Song, D. Artificial intelligence strategies for simulating the integrated energy systems. *Artif. Intell. Rev.* **2024**, *57*, 106. [CrossRef]

Disclaimer/Publisher's Note: The statements, opinions and data contained in all publications are solely those of the individual author(s) and contributor(s) and not of MDPI and/or the editor(s). MDPI and/or the editor(s) disclaim responsibility for any injury to people or property resulting from any ideas, methods, instructions or products referred to in the content.