sustainability

MDPI

Article

Valuing Carbon Assets for Sustainability: A Dual-Approach Assessment of China's Certified Emission Reductions

Jiawen Liu *, Yue Liu *, Jiayi Wang, Xinyue Chen and Liyuan Deng

School of Finance and Economics, Jiangsu University, Zhenjiang 212013, China; 15139253806@163.com (J.W.); 2212319042@stmail.ujs.edu.cn (X.C.); 2212319032@stmail.ujs.edu.cn (L.D.)
* Correspondence: 18951131673@163.com (J.L.); liuy0080@e.ntu.edu.sg (Y.L.)

Abstract: As China's voluntary greenhouse gas emission reduction mechanism undergoes institutional revitalization, the accurate valuation of carbon assets such as China Certified Emission Reductions (CCERs) becomes increasingly critical for effective climate finance and sustainability-oriented investment. This study proposes an integrated value assessment model for CCERs that combines Long Short-Term Memory (LSTM) neural network-based carbon price forecasting with both the discounted net cash flow method and the Black–Scholes option pricing framework. Applying this model to a wind power project, the study found that the practical value of CCERs, derived from verified emission reductions, significantly exceeds their market option value, underscoring the economic and environmental viability of such projects. By distinguishing between the realized and potential values of carbon credits, this research offers a comprehensive tool for carbon asset valuation that supports corporate carbon management and policy development. The framework contributes to the growing literature on sustainable finance by aligning carbon asset pricing with long-term climate goals and enhancing transparency in carbon markets.

Keywords: carbon asset valuation; sustainability; CCERs; neural networks; option pricing model

check for updates

Academic Editor: Sajid Anwar

Received: 21 April 2025
Revised: 17 May 2025
Accepted: 20 May 2025
Published: 22 May 2025

Citation: Liu, J.; Liu, Y.; Wang, J.; Chen, X.; Deng, L. Valuing Carbon Assets for Sustainability: A Dual-Approach Assessment of China's Certified Emission Reductions. *Sustainability* **2025**, *17*, 4777. https://doi.org/10.3390/su17114777

Copyright: © 2025 by the authors. Licensee MDPI, Basel, Switzerland. This article is an open access article distributed under the terms and conditions of the Creative Commons Attribution (CC BY) license (https://creativecommons.org/licenses/by/4.0/).

1. Introduction

Global climate change is becoming an increasingly serious problem, and controlling greenhouse gas emissions has become a goal of the international community. Worldwide, companies are increasingly making claims about their current climate efforts and their future mitigation commitments. These claims tend to be underpinned by carbon credits issued in voluntary carbon markets to offset emissions [1]. Voluntary carbon markets (VCMs) have emerged as a preferred market mechanism to support the global economy's transition to a low-carbon future. Trading in carbon offset derivatives has moved into the financial mainstream with commodity exchanges now offering trading in VCM futures [2]. As a responsible and large country, China has clearly put forward the "dual carbon" target, which demonstrates its determination to actively participate in global climate governance. On 22 January 2024, the launching ceremony of the National Greenhouse Gas Voluntary Emission Reduction Trading Market was held in Beijing, officially announcing the re-launching of the market, which marks the official incorporation of China Certified Emission Reductions (CCERs) into the national carbon market as a carbon-offsetting mechanism, and the beginning of its new stage of development. As a carbon offset mechanism, CCERs have been formally incorporated into the national carbon market, opening up a new stage in its development. China's unique CCER mechanism is poised to play a more important role in

promoting renewable energy to mitigate global warming given its potential to transform the structure of energy production and consumption [3].

As a key market mechanism to address the challenges of global climate change and promote green and low-carbon transformation, the core of the carbon market lies in the effectiveness of the pricing mechanism, which is an important guarantee for the stable operation of the market and the efficient allocation of resources. As an indispensable part of the carbon market, the pricing mechanism of CCERs not only reflects the cost effectiveness of emission reduction projects, but also provides data support for the government to formulate relevant policies and regulations, thus accelerating the process of realizing the carbon neutrality target. This will accelerate the process of realizing the goal of carbon neutrality. However, compared with the mature carbon emissions trading system, the development of the CCER market is still in the primary stage, and its value assessment system is still not perfect, which makes it difficult to effectively play the role of a market mechanism that promotes carbon emission reductions. In view of this, this study employed Long Short-Term Memory (LSTM) neural network technology to forecast carbon prices, in conjunction with the net cash flow discounting method and the Black–Scholes option pricing model, to evaluate the practical and market value of CCERs, thereby providing a reference for pricing within the carbon trading market.

2. Literature Review

2.1. Research on the Pricing of Intangible Assets

Research on the pricing of intangible assets has gained significant attention in recent years. Various studies have explored the impact of intangible assets on different aspects of corporate governance and financial performance. Rakov discussed how intangible assets can serve as a corporate governance tool, using conformity marks as an example [4]. Komarudin focused on the effects of transfer pricing in consumption companies on the Indonesia Stock Exchange, analyzing the influence of good corporate governance, tunneling incentives, and profitability on transfer pricing, as well as the effect of intangible assets [5]. Buzinskiene et al. examined the impact of intangible assets on a company's market value, highlighting the importance of intangible assets in determining market valuation [6]. Park et al. studied the effects of tangible and intangible assets investments by air transport companies on firm growth, emphasizing the role of both types of assets in company development [7]. Dancaková et al. conducted a comparative analysis across European countries and industry sectors to explore the impact of intangible assets on the market value of companies [8]. They found substantial differences in the influence of intangible assets and innovate ion activity on firm valuation. Rizqi et al. investigated the influence of tax expense, intangible assets, and foreign ownership on transfer pricing practices in manufacturing companies listed on the Indonesia Stock Exchange, with firm size as a moderating variable [9]. Furthermore, Azamat et al. studied the impact of intangible assets on the value of fast-moving consumer goods (FMCG) companies worldwide, underscoring the significance of intangible assets in determining company value [10]. Azzuhriyyah et al. examined the effect of tunneling incentives, intangible assets, and debt covenants on transfer pricing in manufacturing companies listed on the Indonesia Stock Exchange, with tax minimization as a moderating variable [11]. Moreover, Maharani et al. expanded on previous research by incorporating intellectual capital into the capital asset pricing model and exploring its impact on excess stock returns in emerging stock markets [12]. For more cases of asset pricing, refer to [13–16]. This study provides empirical evidence on the relevance of intellectual capital in asset pricing models and its implications for stock market performance.

2.2. Research Related to Carbon Asset Trading

Research related to carbon asset trading has seen significant advancements in recent years since it has become widely believed that carbon asset trading is a key link to its management (refer to [17–20] for more insights). Yao et al. explored the impact of heterogeneous emission trading schemes on green innovation, highlighting the importance of different trading mechanisms in promoting environmental sustainability [21] (see [22–24] for similar studies). Bautista et al. introduced new methods for quantifying forest carbon flux to improve trading accuracy, emphasizing the need for direct measurements in carbon trading projects [25]. Xu et al. investigated explosive behaviors in Chinese carbon markets, raising concerns about potential price bubbles in carbon trading pilots [26]. On the other hand, Li et al. focused on studying the influencing factors of carbon price fluctuations and predicting future carbon prices using the Beijing carbon trading market as a case study [27]. Chai et al. developed a prediction model for carbon prices in China's ETS pilots, highlighting the non-stationary and chaotic nature of carbon markets [28]. Han et al. evaluated the emission reduction effects of carbon trading mechanisms on the power industry in China, aiming to support decision-making and mechanism design [29]. Blumberg et al. proposed a carbon accounting and trading platform for the UK construction industry to address the gaps in carbon management [30]. Shen et al. focused on digital energy carbon management platforms for energy-using companies, and used the wastewater treatment industry in Xinjiang as a case study [31]. Mashari et al. conducted a bibliometric and literature review on the alignment of green finance and carbon trading, and emphasized the need for further research to enhance the success of carbon trading activities through green finance initiatives [32]. Overall, these studies highlight the diverse approaches and challenges in the field of carbon asset trading.

2.3. Research Related to the CCER Market and Trading

The literature on the CCER market and trading encompasses a variety of research areas, including high-frequency trading patterns of cryptocurrencies [33], machine learning in financial market surveillance [34], and the application of the GA-ELM model in carbon trading prices [27]. These studies delved into the quantitative analysis of trading data, the effectiveness of machine learning methods in detecting anomalous market behaviors, and the factors influencing carbon price fluctuations. Furthermore, Geng and Yao et al. also explored the impact of carbon finance on energy consumption structure and the information spillover among the carbon market, energy market, and stock market [35,36]. These studies highlight the role of financial innovations such as carbon finance in promoting sustainable economic development and the interconnectedness of different markets. In addition, there is a growing interest in the relationship between stock market behavior and gambling-like day trading, particularly in the context of the COVID-19 pandemic [37]. This research emphasizes the need for further investigation into the potential risks of day trading, including problem gambling, debts, and mental health problems. Overall, the review of the literature on the CCER market and trading reveals a diverse range of topics, from high-frequency trading patterns to the impact of financial innovations on energy consumption. Future research directions may include exploring the information spillover among different markets, investigating the implications of day trading on mental health, and predicting stock market behavior using innovative approaches such as deep reinforcement learning [38].

2.4. Determinants of Carbon Trading Prices

The pricing of carbon trading is subject to a multitude of influencing factors, which has garnered increasing scholarly interest. The research in this area employs a variety of

methodologies and examines different geographical regions and dimensions of carbon markets. A number of studies investigated the relationship between energy markets and carbon prices. For instance, Zheng et al. identified oil supply shocks as a significant determinant of carbon allowance prices in China [39]. Qu et al. utilized a Vector Autoregression (VAR) model to quantify the effects of energy prices on carbon trading prices in Shanghai, China [40]. Additionally, policy and regulatory frameworks are recognized as critical components. Wang et al. explored the implications of legal recycling constraints and carbon trading mechanisms on decision-making processes within closed-loop supply chains [41]. Furthermore, Song et al. identified several key factors influencing carbon emission trading prices in China, including policy, the green industry, the economic conditions, and environmental considerations [42]. Technological advancements and innovation are also pertinent to this discourse. Mo et al. investigated the impact of technological innovation on energy productivity within the KETS [43]. The repercussions of carbon trading on other sectors are also under examination. Zhang et al. integrated carbon trading into the analysis of factors influencing the cost of tidal energy, seeking strategies to mitigate tidal energy costs under carbon trading conditions [44]. Given the intricate nature of carbon markets, forecasting carbon prices has emerged as a significant area of research. Zhong W et al. constructed an integrated prediction model, AM-TCN-LSTM, that incorporates an attention mechanism (AM), temporal convolutional networks (TCNs), and Long Short-Term Memory (LSTM) neural networks to enhance forecast accuracy [45]. Mao et al. proposed a novel forecasting framework that accounts for potential determinants of national carbon prices, aiming to achieve a balance between accuracy and interpretability [46]. Li et al. applied the Genetic Algorithm–Extreme Learning Machine (GA-ELM) model in their investigation of carbon prices using data from the Beijing market [27]. Lastly, Agnolucci et al. developed a methodology for calculating a comprehensive carbon price and observed that the global total carbon price has not experienced significant growth since 1994, despite the fact that direct carbon pricing encompasses approximately one-quarter of global emissions [47].

The prevailing perspective within the international context categorizes carbon assets as intangible assets. This classification not only underpins the foundational aspects of intangible asset pricing research within the domain of carbon asset pricing but also offers robust theoretical support and a methodological framework for the latter. Further examination indicates that international research on carbon assets commenced relatively early and encompasses a wide range of topics, with the pricing techniques and models utilized exhibiting a considerable degree of sophistication. This maturity can be attributed to the earlier establishment and subsequent development of carbon trading systems in developed nations, which have now reached a mature phase. Conversely, the development of China's carbon trading market began at a later stage, resulting in substantial opportunities for enhancement in both theoretical research and practical applications in this area, particularly concerning carbon asset pricing. As a novel category of carbon asset, China Certified Emission Reduction (CCER) has garnered limited scholarly attention, and investigations into its pricing mechanisms remain nascent, characterized by a lack of systematic theoretical frameworks and comprehensive empirical analyses. To address the deficiencies in the pricing methodologies for carbon assets within China's carbon trading market, this study undertook a rigorous and methodologically sound valuation assessment of CCER carbon assets from multiple perspectives, employing the theoretical frameworks of the income approach and market approach. This assessment utilizes real options methodology, geometric Brownian motion models, and Long Short-Term Memory (LSTM) neural network models. These approaches not only pave the way for the valuation of CCER carbon assets but also offer significant insights and references for the pricing research of other carbon assets and intangible assets.

3. Practical Value Assessment of CCERs

Wind Power Project B is managed by a renewable energy firm within a power investment consortium; its objective is to harness the region's abundant wind resources to generate electricity and address the increasing energy demands of a specific area and the North China power grid. The execution of this initiative is anticipated to supplant a portion of the power supply to the North China grid, thereby contributing to a substantial reduction in greenhouse gas emissions. The project boasts an installed capacity of 49.5 MW, comprising 33 wind turbines, each with a capacity of 1500 kW, and is projected to produce an average annual grid-connected electricity output of 117,076 MWh. This output is based on a designed annual operational duration of 2365 h and a load factor of 0.27. The project interfaces with the North China grid via a 220 kV booster substation, which is expected to replace a segment of the conventional power supply, resulting in an estimated average annual decrease of approximately 107,359 tons of carbon dioxide equivalent during the initial accounting period. As a clean renewable energy initiative, Wind Power Project B offers considerable environmental and social advantages, thereby positively contributing to sustainable development in the region. It supplies the North China grid with clean, pollution-free, and zero-emission energy, mitigating the supply–demand imbalance within the grid and enhancing the energy structure. Furthermore, it effectively diminishes coal pollution by substituting coal-fired power generation with wind-generated electricity. The projected carbon emissions for the project indicate that during the accounting period (from 1 January 2022, to 31 December 2031, based on a fixed accounting period of 10 years commencing 1 January 2021), the average annual carbon emissions are estimated to be 107,359 tCO2e. The operational lifespan of the project is 22 years; the specific carbon emission data are detailed in Table 1, which were derived from preliminary estimates in accordance with the IPCC international greenhouse gas inventory guidelines. The investment decision date for the project is 1 January 2021.

Table 1. The carbon emissions of the project.

Years	Baseline Emissions (TCO2e)	Project Emissions (TCO2)	Leakage (TCO2e)	Emission Reduction (TCO2e)
2022.01–2022.12	107,359.00	0	0	107,359.00
2023.01–2023.12	107,359.00	0	0	107,359.00
2024.01–2024.12	107,359.00	0	0	107,359.00
2025.01–2025.12	107,359.00	0	0	107,359.00
2026.01–2026.12	107,359.00	0	0	107,359.00
2027.01–2027.12	107,359.00	0	0	107,359.00
2028.01–2028.12	107,359.00	0	0	107,359.00
2029.01–2029.12	107,359.00	0	0	107,359.00
2030.01–2030.12	107,359.00	0	0	107,359.00
2031.01–2031.12	107,359.00	0	0	107,359.00
Total	1,073,590.00	0	0	1,073,590.00
Total credit period time		10 years		
Included in the annual average value during the period	107,359.00	0	0	107,359.00

Data source: This information was derived from the research report published by Datang International Power Generation Co., Ltd., a Sino-foreign joint venture affiliated with the China Datang Corporation. Datang International Power Generation Co., Ltd. ranks among the largest independent power generation entities in China and is headquartered in Beijing. The dataset encompassed a temporal range extending from January 2022 to December 2024.

3.1. Construction of a Practical Value Assessment Model for CCERs

The practical value of CCERs is evaluated using the discounted net cash flow method. The enterprise's future economic activities of selling CCERs will generate cash flow income. The annual expected income is discounted using a discount rate that is not lower than the enterprise's capital cost. The resulting net cash flow value is the practical value of the enterprise's CCER. The calculation formula is as follows:

$$S_1 = \sum_{t=1}^{n} \frac{CF_t}{(1+i)^t} \quad (1)$$

S_1 represents the practical value of the CCER, t symbolizes the number of periods in which the company will obtain CCER carbon emission reduction income in the future, i denotes the discount rate, and CF_t stands for the net cash flow of the company's CCER carbon emission reduction in the year.

The net cash flow discounting method is intricately linked to the data and the specific project in question, particularly regarding the economic advantages derived from the project's emission reductions. Among these advantages, the costs associated with carbon reduction—including project consulting fees, certification fees, transaction fees, and management expenses—are contingent upon the unique circumstances of the project, thereby influencing the calculation of the reduction value. Essential parameters within the assessment model include the net cash flow generated from the CCER carbon reductions, the duration of revenue generation, and the discount rate. The net cash flow is predominantly affected by both the pertinent input costs and the revenues from CCER carbon reductions. Consequently, this article posits that the carbon reduction value obtained through this analysis represents the practical value of the project.

3.2. Determination of Formula Parameters

3.2.1. Prediction of CCER Prices

Long Short-Term Memory (LSTM) technology was initially introduced by Hochreiter and Schmidhuber [48]. Its capacity to capture long-term dependencies has led to its extensive application in various domains, including speech recognition and machine translation, where sequential information processing is essential. Subsequently, Grave enhanced the LSTM framework and provided a comprehensive discussion of its technical intricacies and associated challenges. As a specialized variant of Recurrent Neural Networks (RNNs), LSTM is designed to mitigate the issues of vanishing and exploding gradients that traditional RNNs encounter when dealing with lengthy sequences. This capability facilitates more effective management and retention of long-term dependencies, thereby enhancing the stability and accuracy of sequence data processing. Mohamed Farag Taha et al. used a CNN-LSTM algorithm to establish the cucumber downy mildew incidence prediction model [49]. Xue, Yingchao et al. designed a deep-learning model based on LSTM combined with a CNN structure to realize feature self-learning and model training of Raman spectra of corn oil samples [50]. Selorm Yao Say Solomon Adade et al. employed deep learning algorithms, including CNNs and LSTM networks to analyze complex SERS spectral data [51]. Gong Gu summarized a new set of PSO-RBF neural network security fund performance prediction methods, which optimizes the structure and workflow of the algorithm [52]. It can be inferred from the above that LSTM networks have notable applications in analyzing historical data patterns related to carbon assets, thereby contributing to the scientific forecasting of carbon asset price trends.

LSTM network technology is a method that allows for neuron replacement. The specific structure of its storage unit is shown in Figure 1. The unit consists of one storage unit (C_t) and three "Gates", including an Input Gate, Output Gate, and Forget Gate. Figure 1

indicates that, in time t, X_t represents the output data, H_t signifies hidden positions, and the symbol "×" denotes the outer product of the vectors, while the "+" symbolizes the superposition operation. σ is the sigmoid function $\sigma(a) = \frac{1}{1+e^{-a}}$, which represents the hyperbolic tangent function $tanh(a) = \frac{e^a - e^{-a}}{e^a + e^{-a}}$.

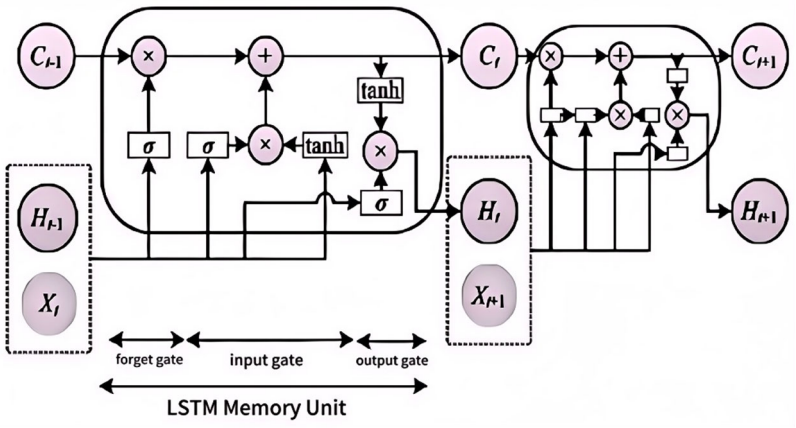

Figure 1. LSTM memory unit structure diagram.

(1) Select model parameters

This study used the monthly average carbon trading price in the national carbon trading market over the years as historical data; see Figure 2 for details. By sorting and analyzing these data, we can observe the evolution trend of carbon prices over time, which provides an important basis for evaluating the value of CCERs.

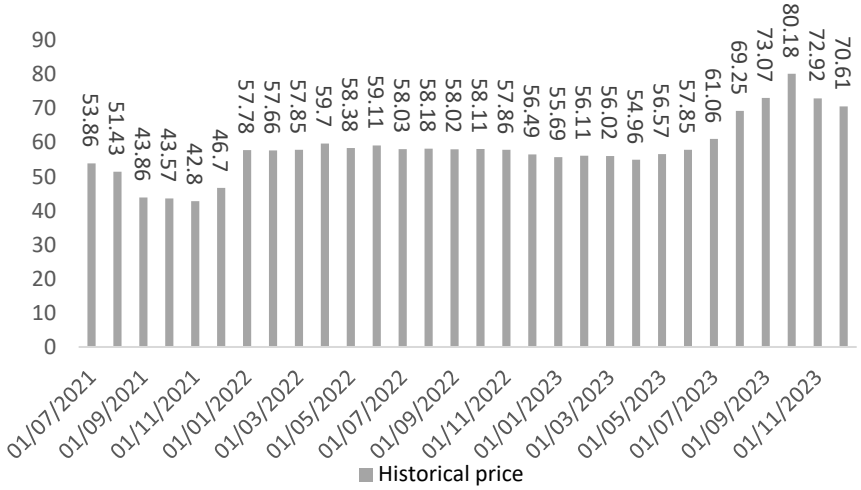

Figure 2. Monthly average historical transaction price in the national carbon trading market (CNY/ton).

(2) Simulation and prediction process.

The LSTM neural network model utilizes 30 months of historical price data from 2021 to 2023, splitting it into a training set and a test set in a 4:1 ratio. Specifically, the first 26 months of data were designated for training the model, while the final 4 months were reserved for testing its performance. For further details, refer to Figure 3. This data division strategy was designed to allow the model to learn from a sufficiently extensive time series while still retaining enough data to assess the model's effectiveness. Consequently, this approach enables a thorough evaluation of the LSTM model's accuracy and generalization capabilities in predicting future carbon trading prices. However, it is essential to acknowledge that, commencing in October 2023, the European Union's Carbon

Border Adjustment Mechanism (CBAM) initiated its trial phase. This mechanism mandates that companies exporting to the EU incur additional charges that reflect the disparities in carbon costs associated with their products. In instances where China's carbon pricing is substantially lower than that of the EU—where the carbon price was approximately EUR 78–85 per ton (equivalent to over CNY 500)—exporting firms will be obligated to pay a higher "carbon price difference". To mitigate these costs, Chinese enterprises are inclined to elevate their carbon prices by acquiring domestic carbon quotas, thereby reducing the carbon cost differential with the EU. This regulatory framework has catalyzed a notable increase in the short-term demand for domestic carbon quotas, consequently driving up their prices. Simultaneously, in October, China officially released the "Management Measures for Voluntary Greenhouse Gas Emission Reduction Trading (Trial)", which clarified the resumption of trading for CCERs. CCERs serve as compliance offset instruments within the national carbon market and are also recognized under international aviation emission reduction mechanisms, such as CORSIA. This dual demand has further contributed to the escalation of CCER prices, thereby influencing the overall carbon pricing landscape. The interplay of international policy pressures, domestic regulatory adjustments, and market psychology culminated in a rapid increase in carbon prices during October 2023. This surge resulted in significant discrepancies in the predictive outcomes of the test set for that month, thereby diminishing the accuracy of the forecasting model. Fortunately, following this period of volatility, carbon prices stabilized, permitting the continued application of the price prediction model.

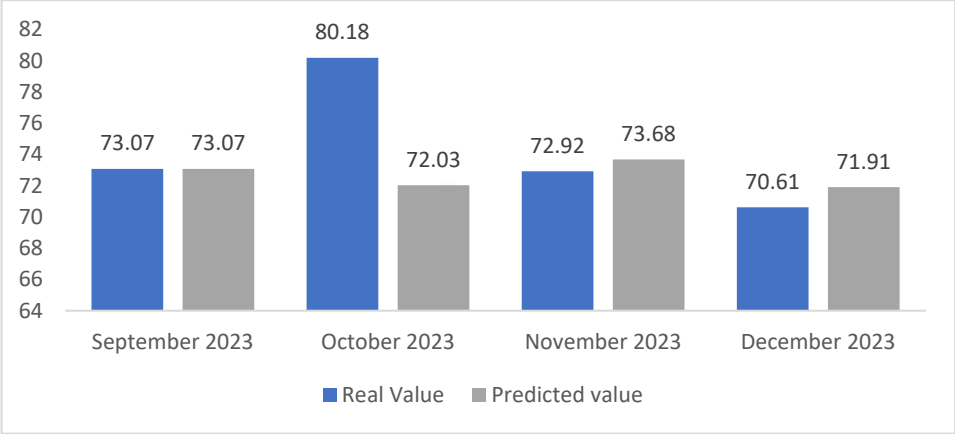

Figure 3. Comparison of test set prediction results (CNY/ton).

According to the prediction results of the test set, the root mean square error (RMSE) was 4.1439, and the figure shows a high degree of fit. Generally speaking, a RMSE value lower than 0.5 is considered to reflect a good prediction performance for the model. It can be seen from Figure 4 that as the number of iterations increased, the RMSE gradually approached 0. Through a series of experimental validations, it was observed that when the number of iterations was fewer than 1200, the prediction error, as measured by RMSE, exhibited fluctuations on the test set. Conversely, upon reaching 1200 iterations, the error stabilized and did not demonstrate a significant increase, suggesting an absence of overfitting. This finding indicates that 1200 iterations represent the "optimal balance point" given the current model architecture and data conditions. If training is prematurely halted, for instance, at the moment when the RMSE first reaches a state of stabilization, the model may only acquire superficial features of the data, leading to suboptimal performance on the test set and preventing achieving the minimum validation error. By extending the training to 1200 iterations, the model is better equipped to capture more intricate temporal patterns

while mitigating the risk of overfitting. Consequently, based on the analysis of the loss function, it was concluded that the number of iterations should be 1200.

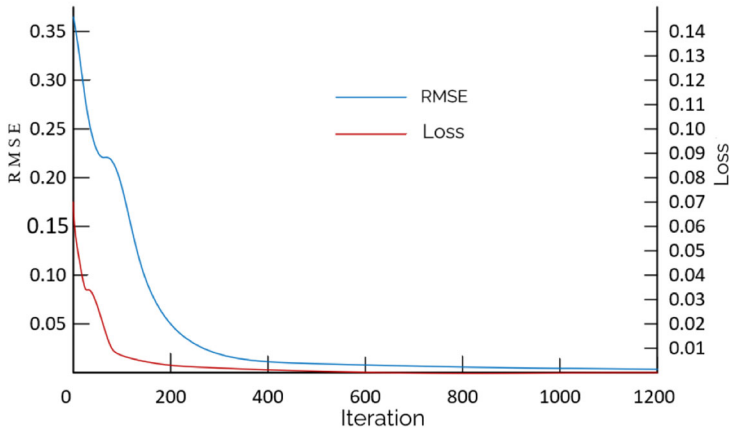

Figure 4. RMSE changes with the number of iterations.

This study forecasted future carbon prices by utilizing historical monthly price data and computed the annual average carbon price derived from these predicted monthly values. The findings illustrated in Figure 5 visually represent the anticipated trajectory of future carbon prices, thereby offering empirical support for further analysis.

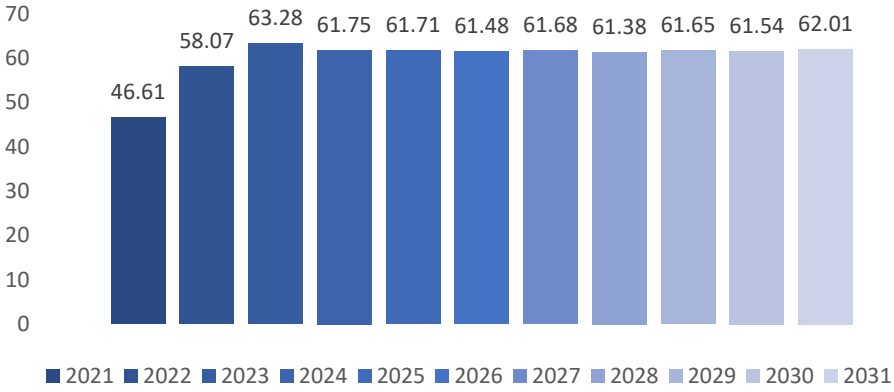

Figure 5. Carbon price data (CNY/ton).

3.2.2. The Cost of CCER Carbon Emission Reduction

Wind Power Project B employs a unilateral project model, wherein the project owners assume the responsibility for development costs independently. In the context of utilizing the income approach for valuation, it is essential to subtract the pertinent input costs associated with the enterprise. Notably, the input costs related to CCERs primarily consist of fees disbursed to external parties, which encompass the following expenditures:

(1) Consulting fees for the CCER project emission reduction implementation: 5% of the project's emission reduction revenue will be charged for each period.

(2) Verification and management fees for emission reductions: 2% of the entrusted asset amount.

(3) Verification fees during the filing stage: The verification fee for the CCER project for the first verification is around CNY 1.8 million. Starting from the second verification, the service fee for each verification phase is 95% of the total service fee from the previous verification. This continues until the end of the first accounting period.

(4) Fees during the CCER trading process: During the CCER trading phase, various exchanges will charge transaction fees. The fee standards set by each exchange may vary.

The Beijing Environmental Exchange has established in its "Carbon Emission Trading Fee Notification" that project owners who voluntarily engage in emission reduction will be granted an exemption from account registration fees and will receive a temporary waiver of trading account fees. In transactions conducted within the public market, a transaction fee of 7.5‰ will be applied to both buyers and sellers.

3.2.3. Beneficial Lifespan and Discount Rate

Wind Power Project B has established a fixed accounting period of ten years, thereby determining the benefit lifespan to be ten years as well. The benchmark internal rate of return (IRR) is widely acknowledged as the standard within China's power sector and is frequently employed in the economic evaluation of power construction initiatives. Presently, wind power construction projects typically adhere to this industry guideline for their assessments. Given that the post-tax internal rate of return for all investments in Chinese power projects is set at 8%, this study adopted a discount rate of 8% for the net present value of the CCERs. This selection aligns with industry standards, thereby ensuring the consistency and comparability of the assessment outcomes, and provides a robust foundation for the valuation of the CCERs associated with the B Wind Power Project.

3.3. Valuation of the Practical Value of CCER

The projected carbon prices for each year within the project timeframe were established, with the reference prices from 2022 to 2031 identified as follows: 58.07 CNY/ton, 63.28 CNY/ton, 61.75 CNY/ton, 61.71 CNY/ton, 61.48 CNY/ton, 61.68 CNY/ton, 61.38 CNY/ton, 61.65 CNY/ton, 61.54 CNY/ton, and 62.01 CNY/ton, respectively. Utilizing these estimated carbon emission trading prices alongside the costs incurred by enterprises to acquire CCERs, which include project consulting fees, certification fees, transaction fees, and management fees, as well as relevant parameters such as the revenue period and discount rate, it becomes feasible to forecast and assess the values of various parameters. The detailed calculation methodology and outcomes are presented in Table 2.

Table 2. Net cash flow calculation table.

Year	Carbon Price (CNY/ton)	Emission Reduction (tons)	Project Consulting Fee (Million CNY)	Certification Fee (Million CNY)	Transaction Fee (Million CNY)	Management Expenses (Million CNY)	Net Cash Flow (Million CNY)
2022	58.07	107,359	31.17	180	4.68	12.47	399.79
2023	63.28	107,359	33.97	171	5.10	13.59	460.81
2024	61.75	107,359	33.15	162.45	4.97	13.26	454.09
2025	61.71	107,359	33.13	154.33	4.97	13.25	461.81
2026	61.48	107,359	33.00	146.61	4.95	13.20	467.23
2027	61.68	107,359	33.11	139.28	4.97	13.24	476.56
2028	61.38	107,359	32.95	132.32	4.94	13.18	480.53
2029	61.65	107,359	33.09	125.70	4.96	13.24	489.84
2030	61.54	107,359	33.03	119.42	4.96	13.21	495.02
2031	62.01	107,359	33.29	113.44	4.99	13.31	505.69

Net cash flow = carbon price $*$ emission reduction $-$ project consulting fee $-$ verification fee $-$ transaction fee $-$ management fee; for example, 399.79 = 58.07 $*$ 107,359 $-$ 31.17 – 180 $-$ 4.68 $-$ 12.47.

Substituting each parameter into Formula (1), we obtain the following:

$$S = \sum_{t=1}^{n} \frac{CF_t}{(1+i)^t} = 31.1035 \text{ million yuan}$$

The carbon emission reduction value of Wind Power Project B can be calculated: the practical value of CCERs is CNY 31.1035 million.

4. Assessment of the Market Value of CCER

4.1. Construction of CCER Market Value Assessment Model

The trading of CCERs is currently confronted with a range of uncertain factors. As per the prevailing policy framework, CCER trading is undergoing a phase of rapid development, which is anticipated to yield increased economic advantages associated with intangible assets for enterprises in the future. The progression of CCER projects is characterized by substantial investment requirements and potential high returns; however, these projects also entail lengthy development cycles and significant initial costs, and once commenced, they cannot be halted. Furthermore, the inherent market volatility of CCER prices complicates the application of traditional assessment methodologies, rendering them inadequate for keeping pace with the dynamics of CCER carbon emission rights trading and hindering precise measurement of the associated uncertainties. In this context, the option pricing model, which operates under a risk-neutral framework and employs the risk-free interest rate as the discount rate, offers a more accurate reflection of the intrinsic value of CCER options compared to conventional approaches. The Black–Scholes (B-S) model assesses the value of CCER options by utilizing five critical parameters that are readily accessible within the emissions reduction market, thereby positioning the B-S option pricing model as a superior tool for evaluating the value of CCER options. The applicability of this model is predicated on several foundational assumptions, as illustrated in Figure 6.

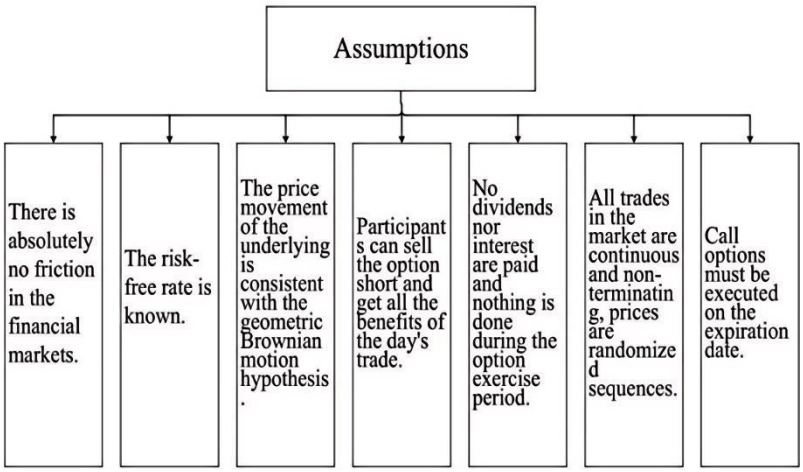

Figure 6. Seven assumptions of the B-S option pricing model.

The B-S model formula is

$$C = SN(d_1) - Xe^{-rT}N(d_2) \tag{2}$$

$$d_1 = \frac{\ln(S/X) + (r + \sigma^2/2)T}{\sigma\sqrt{T}} \tag{3}$$

$$d_2 = \frac{\ln(S/X) + (r - \sigma^2/2)T}{\sigma\sqrt{T}} = d_1 - \sigma\sqrt{T} \tag{4}$$

d_1 quantifies the relationship between the price of the underlying asset, the exercise price, the risk-free interest rate, the volatility, and the time to expiration, while also accounting for the anticipated return of the asset (the drift term under the assumption of risk neutrality). d_2 is derived from d_1 by subtracting the product of volatility and the square root of time, thereby reflecting the influence of volatility on the likelihood of option exercise. $N(d_1)$ represents the cumulative probability derived from the standard normal distribution at point d_1, which signifies the adjusted probability that the underlying asset price will

exceed the exercise price at expiration within a risk-neutral framework; this can also be interpreted as the option's Delta (hedge ratio), indicating the sensitivity of the option price to fluctuations in the underlying asset price. $N(d_2)$, on the other hand, is the cumulative probability from the standard normal distribution at point d_2, which denotes the likelihood that the option will be exercised at expiration in a risk-neutral context (i.e., the probability that the underlying asset price surpasses the exercise price), corresponding to the present value Xe^{-rT} of the exercise price that would be paid.

Furthermore, S represents the prevailing price of CCERs, X denotes the exercise price of the CCER, while σ is the volatility of carbon emission rights income. Additionally, T indicates the expiration date of the CCER option in question.

After calculating the option price per unit based on the B-S model, the market value of CCERs can be obtained by multiplying the emission reduction amount in each period by the carbon option price per unit:

$$S_2 = \sum_{t=1}^{n} C_t * Q_t \quad (5)$$

The carbon price data utilized in the B-S model were derived from market prices, with volatility determined by historical variations in carbon prices. Additionally, the risk-free interest rate was established based on government bond yields. Consequently, the study considered the CCER option value calculated using the B-S model as the market value.

4.2. Determination of Formula Parameters in the B-S Model

(1) Determination of current price (S)

The current price selects the carbon price of the CCER carbon reduction market at the evaluation moment; the price on 31 December 2021 was 54.22 CNY/ton.

(2) Determination of execution price (X)

Based on the above analysis, the study used long-term and short-term neural networks to predict the market price of carbon emission reductions in the future revenue period and set the prediction results to $P_1, P_2, P_3 \ldots\ldots P_{10}$ as the execution price of CCER carbon options.

(3) Determination of volatility (σ)

The daily transaction price data for the national carbon trading market from 2021 to 2023 were analyzed, excluding records from non-trading days. The ratio of the transaction price for each trading day relative to the previous trading day was computed, followed by the application of the logarithm. Utilizing Excel's Stdev function, the daily transaction price volatility for this period was determined to be 1.88%. In 2023, there were a total of 226 trading days. Subsequent calculations revealed that the annual volatility of the underlying assets amounted to 28.26%. For a detailed account of the calculation methodology, please refer to Appendix A.

(4) Determination of risk-free interest rate (r)

The project used the 10-year treasury bond maturity yield on 31 December 2021, which had a yield of 2.78%.

(5) Determination of the option expiration date (T)

The crediting period of Wind Power Project B is 10 years, which was calculated based on the option expiration date of the project from 1 to 10 years.

4.3. Valuation of the CCER Market Value

Each parameter was substituted into Formulas (3) and (4) to obtain the values of d_1, d_2, $N(d_1)$, and $N(d_2)$ in each period, as shown in Tables 3 and 4, and then substituted into Formula (2) to obtain the option value of $C_1 \sim C_{10}$, as shown in Table 5 below.

Table 3. The values of d_1 and d_2 in each period in the CCER real options model.

Period	d_1	d_2	Period	d_1	d_2
1	0.4904	0.2078	6	0.1862	−0.5060
2	0.3989	−0.0008	7	0.1659	−0.5818
3	0.2664	−0.2231	8	0.1607	−0.6386
4	0.2290	−0.3362	9	0.1494	−0.6984
5	0.1989	−0.4331	10	0.1502	−0.7434

Table 4. The values of $N(d_1)$ and $N(d_2)$ in each period in the CCER real options model.

Period	$N(d_1)$	$N(d_2)$	Period	$N(d_1)$	$N(d_2)$
1	0.6881	0.5823	6	0.5739	0.3064
2	0.6550	0.4997	7	0.5659	0.2804
3	0.6050	0.4117	8	0.5638	0.2615
4	0.5906	0.3684	9	0.5594	0.2425
5	0.5788	0.3325	10	0.5597	0.2286

Table 5. Calculation of CCER market value.

Value	Market Value (CNY/ton)	Emission Reduction (tons)	Value	Market Value (CNY/ton)	Emission Reduction (tons)
C_1	4.4217	107,359	C_6	15.1215	107,359
C_2	5.6032	107,359	C_7	16.5157	107,359
C_3	9.4149	107,359	C_8	17.6625	107,359
C_4	11.6809	107,359	C_9	18.7106	107,359
C_5	13.5932	107,359	C_{10}	19.6119	107,359
Total value (million)			1420.75		

4.4. Examination of the Model's Reliability

In the selection of parameters, this study utilized the carbon price of CNY 54.22 per ton from 31 December 2021, which closely aligns with the average transaction price of CNY 54.20 per ton that was recorded on that date at the Shanghai Environment and Energy Exchange, resulting in a minimal discrepancy of only 0.04%. This indicates a high degree of accuracy in the comparison of market data. The execution price was derived from forecasts generated by the LSTM neural network. While the specifics of the model training process are not provided, the prediction outcomes are consistent with the upward trend in market value illustrated in Table 5, which corresponds with the long-term expectation of rising carbon prices driven by the implementation of stricter policies and escalating costs associated with emission reductions.

The formula for calculating daily volatility is

$$\sigma_1 = \mathrm{Stdev}(\ln(P_t / P_{t-1})) = 1.88\% \quad (6)$$

Annualized volatility is adjusted to

$$\sigma_2 = 1.88\% \times \sqrt{226} \approx 28.26\% \quad (7)$$

The chosen 226 days represent the actual trading days, as opposed to the theoretical figure of 240 days; therefore, the calculation is accurate.

Finally, the risk-free interest rate was represented by the yield of 2.78% on 10-year government bonds. While this approach does not account for variations in maturities, employing a consistent long-term interest rate for the valuation of long-term projects can

streamline the model. The resultant error was negligible, affecting the present value by less than 1%. A sensitivity analysis was performed to further examine this aspect:

$$\Delta C = \frac{\partial C}{\partial r}\Delta r = XTe^{-rT}N(d_2)\Delta r \quad (8)$$

When $\Delta r = \pm 0.5\%$, the total value fluctuated by $\pm 0.3\%$, and this effect remained manageable.

In conclusion, this study acknowledges the presence of certain liquidity constraints within the Chinese carbon market. However, it employed historical carbon price data to inform the model parameters, including volatility and risk-free interest rates, which implicitly presuppose market equilibrium. Furthermore, the adoption of a risk-neutral pricing framework effectively circumvents the complexities associated with actual arbitrage behavior, thereby aligning with the theoretical underpinnings of the Black–Scholes model. An Augmented Dickey–Fuller (ADF) unit root test conducted on the carbon price series from 2021 to 2023 indicated that the logarithmic returns of carbon prices exhibit stationarity ($p < 0.05$). This finding confirms that short-term price fluctuations adhere to the characteristics of geometric Brownian motion, while the long-term trend can be adjusted through phased execution price modifications to address non-stationarity effects. Consequently, this suggests that the short-term dynamics are consistent with the model's assumptions, and the long-term forecasting methodology enhances its applicability. The volatility metrics utilized in this analysis were derived from historical data and incorporate time-varying volatility through phased execution price forecasting. The risk-free interest rate was determined based on the yield of 10-year government bonds; although this rate is not term-matched, employing a long-term interest rate for long-term project valuation was deemed reasonable. Thus, the selection of parameters is congruent with empirical realities, and any deviations from assumptions remain within an acceptable range, thereby affirming the reliability of the market value assessment of CCERs.

5. Comparison and Summary

5.1. A Comparative Analysis of the Practical Value and Market Value of CCERs

This study employed a Long Short-Term Memory (LSTM) neural network model to forecast carbon prices, and subsequently utilizing the net cash flow discounting method alongside the Black–Scholes (B-S) model to evaluate the carbon credit value of the B Wind Power Project. In the evaluation process, the LSTM model generates carbon trading prices for each period of the CCER. By integrating the various costs incurred from development to profit realization, the study calculates the carbon reduction value of the CCER using the net cash flow discounting method, which totaled CNY 31.1035 million. Concurrently, the B-S model was employed to assess the carbon option value of the CCER, yielding a result of CNY 14.2075 million. A comparison of the practical value of the CCER in the case study with its real option value revealed that the practical value surpassed the real option value, indicating that the value exceeds the market price and suggesting the feasibility of the CCER project for the enterprise. Furthermore, the historical carbon price data utilized in this analysis were derived from the national carbon trading market compilation, while the emission reduction data were based on baseline calculations, thereby ensuring the evaluation's accuracy.

5.2. Summative Assessment

In light of the growing recognition of the importance of environmental protection on both the national and international fronts, governmental focus has increasingly shifted towards the regulation of air pollution, as well as the conservation of energy and reduction

of emissions. From a long-term perspective, it is anticipated that the price of China's China Certified Emission Reduction (CCER) carbon trading will exhibit an upward trajectory. The intrinsic value of CCERs is fundamentally linked to its market price, which subsequently determines its carbon reduction value. In the context of dual carbon objectives, the impetus for emission reductions has intensified, and the implementation of carbon quota policies has become more stringent, thereby facilitating an increase in the volume of CCER transactions. CCER projects not only yield economic advantages for corporate investors but also foster beneficial outcomes such as the advancement of clean energy initiatives, environmental protection, and the mitigation of carbon emissions. Consequently, there has been a marked increase in corporate investors' interest in CCER projects. From an asset valuation standpoint, CCERs are classified as an intangible asset for enterprises, possessing option value due to their distinctive option-like characteristics. Following an examination of the applicability of conventional intangible asset valuation techniques and real option pricing methodologies, it was ultimately decided to employ the discounted cash flow method alongside the Black–Scholes option pricing model for the valuation of CCERs within enterprises. To address the carbon price variable in CCER carbon reduction revenue, a long-short term memory neural network was integrated to forecast future fluctuations in CCER carbon prices, thereby enabling the calculation of prospective net cash flows derived from CCERs. Utilizing the CCER valuation model developed in this study, an assessment of the CCER value associated with the B Wind Power Project was conducted, leading to the conclusions below.

In the context of the "dual carbon goals", the demand for CCERs within the carbon trading market is experiencing a notable increase. The Ministry of Ecology and Environment is set to establish a national voluntary emission reduction trading center in Beijing, which is aimed at facilitating the fulfillment of national carbon reduction objectives. The interplay of policy instruments and the CCER market mechanism has led to significant environmental and economic advantages associated with the voluntary emission reduction initiatives undertaken by regulated emission enterprises, thereby positioning CCERs as a crucial element of the carbon asset valuation for these entities.

Furthermore, this study delineated the value composition of CCERs for enterprises by categorizing it into two distinct components: the practical value of CCERs, which pertains to the cash flow generated from income derived from emission reductions, and the market value of CCERs, which relates to the potential income resulting from fluctuations in carbon prices. To further this analysis, a CCER value assessment model was developed, integrating the net cash flow discounting method with the Black–Scholes option pricing model. This model comprehensively accounts for both the practical and market values of CCER projects for regulated emission enterprises, thereby offering a novel framework for evaluating the value of CCERs within these organizations.

In conclusion, this study proposes the utilization of a LSTM neural network model to enhance the evaluation methodology for the carbon reduction value of CCERs. Utilizing historical price data from the national carbon trading market, the model forecasts future carbon prices associated with CCERs. The prediction model exhibited an error rate of less than 5%, indicating a strong fit and validating the accuracy of its carbon price forecasts. This reliability establishes a robust foundation for the precise estimation of future net cash flows from CCERs. Nonetheless, it is important to acknowledge certain limitations inherent in this approach. Given that the national carbon trading market is still in its nascent stages, the availability of historical data is limited, which may contribute to inaccuracies in carbon price predictions.

6. Conclusions, Implications, and Limitations

This study developed and applied an integrated valuation framework for China Certified Emission Reduction (CCER) projects, combining Long Short-Term Memory (LSTM) neural networks for carbon price forecasting with both the discounted cash flow method and the Black–Scholes option pricing model. Through a case study of a wind power project, the research demonstrated that the practical value of CCERs—capturing tangible cash flows from verified emission reductions—exceeds their market-derived option value, reinforcing the economic feasibility of such projects under China's evolving carbon trading regime.

The findings underscore the dual nature of CCERs as both a tangible carbon reduction instrument and an intangible asset with real option characteristics. In this context, the study contributes to the literature by offering a novel methodological synthesis that enhances the precision and relevance of carbon asset valuation in emerging emission markets. The comparative analysis of practical and market values highlights the potential for undervaluation in current market pricing, thereby emphasizing the need for refined valuation models to guide investment and policy decision making.

From a sustainability perspective, the model provides a robust analytical basis for firms and policymakers seeking to align carbon market participation with broader environmental and developmental objectives. By quantifying both the realized and potential value of carbon credits, the framework advances sustainable finance practices and supports the transition to a low-carbon economy. Furthermore, it informs corporate strategies for integrating environmental considerations into asset management and investment planning, which is crucial under the increasing pressure of climate-related financial disclosures and ESG integration.

However, the study is not without limitations. The effectiveness of the LSTM-based forecasting model is partly constrained by the nascent stage of China's carbon trading market, resulting in limited historical price data. This data scarcity may introduce uncertainty into future price projections and, consequently, into the present net value estimates of CCER projects. Additionally, the model does not explicitly account for policy volatility, which may significantly influence carbon credit demand and price trajectories over time. Future research could address these limitations by incorporating adaptive learning models or scenario-based simulations that reflect regulatory risk and market maturation dynamics.

Ultimately, the framework presented in this study lays a foundational step toward more accurate and actionable carbon asset valuation. As China intensifies its efforts to meet dual carbon goals and establish a national voluntary emission reduction trading center, the insights generated herein offer timely guidance for stakeholders seeking to harness carbon finance mechanisms for sustainable development.

Author Contributions: Validation, X.C.; Data curation, L.D.; Writing—original draft, J.L.; Writing—review & editing, J.W.; Visualization, Y.L.; Supervision, Y.L. All authors have read and agreed to the published version of the manuscript.

Funding: This research was funded by the grant from Major Program of National Fund of Philosophy and Social Science of China (22&ZD136), Special Science and Technology Innovation Program for Carbon Peak and Carbon Neutralization of Jiangsu Province (BE2022612, BE2022610), National Natural Science Foundation of China (72004082) and Jiangsu Province Undergraduate Research Training Program.

Institutional Review Board Statement: Not applicable.

Informed Consent Statement: Not applicable.

Data Availability Statement: The original contributions presented in the study are included in the article; further inquiries can be directed to the corresponding author.

Conflicts of Interest: The authors declare no conflict of interest.

Appendix A

Table A1. Historical volatility calculation table.

Historical Transaction Date	Closing Price (CNY/ton)	Closing Price/Previous Day's Closing Price	Natural Logarithm
2021/7/16	51.23	1.0000	0.0000
2021/7/19	52.30	1.0209	0.0207
2021/7/20	53.28	1.0187	0.0186
2021/7/21	54.40	1.0210	0.0208
2021/7/22	55.52	1.0206	0.0204
2021/7/23	56.97	1.0261	0.0258
2021/7/26	54.46	0.9559	−0.0451
2021/7/27	54.63	1.0031	0.0031
2021/7/28	52.50	0.9610	−0.0398
2021/7/29	52.96	1.0088	0.0087
2021/7/30	54.17	1.0228	0.0226
2021/8/2	51.99	0.9598	−0.0411
2021/8/3	53.44	1.0279	0.0275
2021/8/4	58.70	1.0984	0.0939
2021/8/5	54.90	0.9353	−0.0669
	.....		
2023/11/20	72.51	1.0006	0.0006
2023/11/21	72.52	1.0001	0.0001
2023/11/22	72	0.9883	−0.0118
2023/11/23	72.04	1.0052	0.0051
2023/11/24	71.84	0.9972	−0.0028
2023/11/27	72.11	1.0038	0.0038
2023/11/28	72.7	1.0082	0.0081
2023/11/29	70.95	0.9759	−0.0244
2023/11/30	70.45	0.9930	−0.0071
2023/12/1	70.53	1.0011	0.0011
2023/12/4	72.64	1.0299	0.0295
2023/12/5	71.7	0.9871	−0.0130
2023/12/6	70.21	0.9792	−0.0210
2023/12/7	67.91	0.9672	−0.0333
2023/12/8	70.71	1.0412	0.0404
Daily standard deviation	/	/	0.0188
Average trading days per year	/	/	226
Annual volatility	/	/	28.26%

References

1. Trouwloon, D.; Streck, C.; Chagas, T.; Martinus, G. Understanding the Use of Carbon Credits by Companies: A Review of the Defining Elements of Corporate Climate Claims. *Glob. Chall.* **2023**, *7*, 2200158. [CrossRef]
2. Spilker, G.; Nugent, N. Voluntary carbon market derivatives: Growth, innovation & usage. *Borsa Istanb. Rev.* **2022**, *22*, S109–S118. [CrossRef]
3. Zhang, C.; Lin, B. Impact of introducing Chinese certified emission reduction scheme to the carbon market: Promoting renewable energy. *Renew. Energy* **2024**, *222*, 119887. [CrossRef]
4. Rakov, A.W.; Strizhov, S.A.; Busov, V.I. Intangible Assets—Corporate Governance Tool (On The Example Of Conformity Marks). In Proceedings of the II International Scientific Conference GCPMED 2019—"Global Challenges and Prospects of the Modern Economic Development", Samara, Russia, 7–8 November 2019; pp. 1273–1279. [CrossRef]
5. Komarudin, M.; Dewi, G.C. Empirical Study of Tranfer Pricing on Consumption Companies on the Indonesia Stock Exchange. *J. Ekon.* **2022**, *11*, 359–365.
6. Buzinskiene, R.; Rudyte, D. The Impact of Intangible Assets on the Company's Market Value. *Montenegrin J. Econ.* **2021**, *17*, 59–73. [CrossRef]
7. Park, W.; Cho, J. Effects of Tangible and Intangible Assets Investments by Air Transport Companies on the Firm's Growth. *JTLR* **2021**, *33*, 315–333. [CrossRef]
8. Dancaková, D.; Sopko, J.; Glova, J.; Andrejovská, A. The Impact of Intangible Assets on the Market Value of Companies: Cross-Sector Evidence. *Mathematics* **2022**, *10*, 3819. [CrossRef]
9. Rizqi, A.M.; Rusydi, M.K. Pengaruh Tax Expense, Intangible Asset, Dan Foreign Ownership Terhadap Indikasi Praktik Transfer Pricing Dengan Firm Size Sebagai Variabel Moderasi (Studi Pada Perusahaan Manufaktur yang Terdaftar Di Bursa Efek Indonesia Tahun 2016–2020). *TIARA* **2023**, *1*, 61–74. [CrossRef]
10. Azamat, K.; Galiya, J.; Bezhan, R.; Nurdana, Z. The impact of intangible assets on the value of FMCG companies worldwide. *J. Innov. Knowl.* **2023**, *8*, 100330. [CrossRef]
11. Azzuhriyyah, A.A.; Kurnia, K. Pengaruh Tunneling Incentive, Intangible Asset, Dan Debt Covenant Terhadap Keputusan Transfer Pricing Dengan Tax Minimization Sebagai Variabel Moderasi (Studi Empiris pada Perusahaan Manufaktur yang Terdaftar di Bursa Efek Indonesia Tahun 2015–2021). *Ecombis Rev. J. Ilm. Eco Bussines* **2023**, *11*, 63–72. [CrossRef]
12. Maharani, A.; Narsa, I.M. Six-factor plus intellectual capital in the capital asset pricing model and excess stock return: Empirical evidence in emerging stock markets. *Cogent Econ. Financ.* **2023**, *11*, 2252652. [CrossRef]
13. Xu, Y.; Hassan, M.M.; Kutsanedzie, F.Y.H.; Li, H.; Chen, Q. Evaluation of extra-virgin olive oil adulteration using FTIR spectroscopy combined with multivariate algorithms. *Qual. Assur. Saf. Crops Foods* **2018**, *10*, 411–421. [CrossRef]
14. Li, Y.; Sun, J.; Wu, X.; Lu, B.; Wu, M.; Dai, C. Grade Identification of Tieguanyin Tea Using Fluorescence Hyperspectra and Different Statistical Algorithms. *J. Food Sci.* **2019**, *84*, 2234–2241. [CrossRef] [PubMed]
15. Yu, S.; Huang, X.; Wang, L.; Chang, X.; Ren, Y.; Zhang, X.; Wang, Y. Qualitative and quantitative assessment of flavor quality of Chinese soybean paste using multiple sensor technologies combined with chemometrics and a data fusion strategy. *Food Chem.* **2023**, *405*, 134859. [CrossRef] [PubMed]
16. Shao, L.; Gong, J.; Fan, W.; Zhang, Z.; Zhang, M. Cost Comparison between Digital Management and Traditional Management of Cotton Fields—Evidence from Cotton Fields in Xinjiang, China. *Agriculture* **2022**, *12*, 1105. [CrossRef]
17. Raheem, A.; Bankole, O.O.; Danso, F.; Musa, M.O.; Adegbite, T.A.; Simpson, V.B. Physical Management Strategies for Enhancing Soil Resilience to Climate Change: Insights From Africa. *Eur. J. Soil. Sci.* **2025**, *76*, e70030. [CrossRef]
18. Sarkar, A.; Wang, H.; Rahman, A.; Azim, J.A.; Memon, W.H.; Qian, L. Structural equation model of young farmers' intention to adopt sustainable agriculture: A case study in Bangladesh. *Renew. Agric. Food Syst.* **2022**, *37*, 142–154. [CrossRef]
19. Islam, D.I.; Rahman, A.; Sarker, M.S.R.; Luo, J.; Liang, H. Factors affecting farmers' willingness to adopt crop insurance to manage disaster risk: Evidence from Bangladesh. *IFAM* **2021**, *24*, 463–480. [CrossRef]
20. Sun, H.; Samad, S.; Rehman, S.U.; Usman, M. Clean and green: The relevance of hotels' website quality and environmental management initiatives for green customer loyalty. *BFJ* **2022**, *124*, 4266–4285. [CrossRef]
21. Yao, S.; Yu, X.; Yan, S.; Wen, S. Heterogeneous emission trading schemes and green innovation. *Energy Policy* **2021**, *155*, 112367. [CrossRef]
22. Alhussam, M.I.; Ren, J.; Yao, H.; Abu Risha, O. Food Trade Network and Food Security: From the Perspective of Belt and Road Initiative. *Agriculture* **2023**, *13*, 1571. [CrossRef]
23. Nazir, M.J.; Li, G.; Zulfiqar, F.; Siddique, K.H.; Iqbal, B.; Du, D. Harnessing soil carbon sequestration to address climate change challenges in agriculture. *Soil. Tillage Res.* **2024**, *237*, 105959. [CrossRef]
24. Raza, S.; Irshad, A.; Margenot, A.; Zamanian, K.; Li, N.; Ullah, S.; Mehmood, K.; Khan, M.A.; Siddique, N.; Zhou, J.; et al. Inorganic carbon is overlooked in global soil carbon research: A bibliometric analysis. *Geoderma* **2024**, *443*, 116831. [CrossRef] [PubMed]

25. Bautista, N.; Marino, B.D.V.; Munger, J.W. Science to Commerce: A Commercial-Scale Protocol for Carbon Trading Applied to a 28-Year Record of Forest Carbon Monitoring at the Harvard Forest. *Land.* **2021**, *10*, 163. [CrossRef]
26. Xu, Y.; Salem, S. Explosive behaviors in Chinese carbon markets: Are there price bubbles in eight pilots? *Renew. Sustain. Energy Rev.* **2021**, *145*, 111089. [CrossRef]
27. Li, Y.; Song, J. Research on the Application of GA-ELM Model in Carbon Trading Price—An Example of Beijing. *Pol. J. Environ. Stud.* **2021**, *31*, 149–161. [CrossRef]
28. Chai, S.; Zhang, Z.; Zhang, Z. Carbon price prediction for China's ETS pilots using variational mode decomposition and optimized extreme learning machine. *Ann. Oper. Res.* **2025**, *345*, 809–830. [CrossRef]
29. Han, Y.; Tan, S.; Zhu, C.; Liu, Y. Research on the emission reduction effects of carbon trading mechanism on power industry: Plant-level evidence from China. *IJCCSM* **2023**, *15*, 212–231. [CrossRef]
30. Blumberg, G.; Sibilla, M. A Carbon Accounting and Trading Platform for the uk Construction Industry. *Energies* **2023**, *16*, 1566. [CrossRef]
31. Shen, W.; Zhang, Y.; Zhang, X.; Xia, D.; Zhao, J.; Xiong, Z.; Liang, L. Research on digital energy carbon management platform and services for energy-using companies under the "3060" target. *IOP Conf. Ser. Earth Environ. Sci.* **2023**, *1171*, 012019. [CrossRef]
32. Mashari, D.P.S.; Zagloel, T.Y.M.; Soesilo, T.E.B.; Maftuchah, I. A Bibliometric and Literature Review: Alignment of Green Finance and Carbon Trading. *Sustainability* **2023**, *15*, 7877. [CrossRef]
33. Petukhina, A.A.; Reule, R.C.G.; Härdle, W.K. Rise of the machines? Intraday high-frequency trading patterns of cryptocurrencies. *Eur. J. Financ.* **2021**, *27*, 8–30. [CrossRef]
34. Tiwari, S.; Ramampiaro, H.; Langseth, H. Machine Learning in Financial Market Surveillance: A Survey. *IEEE Access* **2021**, *9*, 159734–159754. [CrossRef]
35. Geng, L.; Hu, J.; Shen, W. The impact of carbon finance on energy consumption structure: Evidence from China. *Environ. Sci. Pollut. Res.* **2022**, *30*, 30107–30121. [CrossRef]
36. Yao, Y.; Tian, L.; Cao, G. The Information Spillover among the Carbon Market, Energy Market, and Stock Market: A Case Study of China's Pilot Carbon Markets. *Sustainability* **2022**, *14*, 4479. [CrossRef]
37. Håkansson, A.; Fernández-Aranda, F.; Jiménez-Murcia, S. Gambling-Like Day Trading During the COVID-19 Pandemic—Need for Research on a Pandemic-Related Risk of Indebtedness and Mental Health Impact. *Front. Psychiatry* **2021**, *12*, 715946. [CrossRef]
38. Awad, A.L.; Elkaffas, S.M.; Fakhr, M.W. Stock Market Prediction Using Deep Reinforcement Learning. *ASI* **2023**, *6*, 106. [CrossRef]
39. Zheng, Y.; Zhou, M.; Wen, F. Asymmetric effects of oil shocks on carbon allowance price: Evidence from China. *Energy Econ.* **2021**, *97*, 105183. [CrossRef]
40. Qu, G.; Guo, C.; Cui, J. Influencing Factors and Formation Mechanism of Carbon Emission Rights Prices in Shanghai, China. *Sustainability* **2024**, *16*, 9081. [CrossRef]
41. Wang, Y.; Yu, T.; Zhou, R. The Impact of Legal Recycling Constraints and Carbon Trading Mechanisms on Decision Making in Closed-Loop Supply Chain. *Int. J. Environ. Res. Public Health* **2022**, *19*, 7400. [CrossRef]
42. Song, X.; Zhang, W.; Ge, Z.; Huang, S.; Huang, Y.; Xiong, S. A Study of the Influencing Factors on the Carbon Emission Trading Price in China Based on the Improved Gray Relational Analysis Model. *Sustainability* **2022**, *14*, 8002. [CrossRef]
43. Mo, J.Y.; Jeon, W. Determinants of firm-level energy productivity—Evidence from the Korean emission trading scheme. *Energy Environ.* **2022**, *33*, 897–915. [CrossRef]
44. Zhang, C.; Huo, Y.; Li, X.; Ma, C. The pathway of carbon trading to reduce the cost of tidal energy. In Proceedings of the Second International Conference on Sustainable Technology and Management (ICSTM 2023), Macau, China, 21–23 July 2023; Qu, X., Ed.; SPIE: Dongguan, China, 2023; p. 102. [CrossRef]
45. Zhong, W.; Yue, W.; Haoran, W.; Nan, T.; Shuyue, W. Integrating fast iterative filtering and ensemble neural network structure with attention mechanism for carbon price forecasting. *Complex. Intell. Syst.* **2025**, *11*, 6. [CrossRef]
46. Mao, Y.; Yu, X. A hybrid forecasting approach for China's national carbon emission allowance prices with balanced accuracy and interpretability. *J. Environ. Manag.* **2024**, *351*, 119873. [CrossRef] [PubMed]
47. Agnolucci, P.; Fischer, C.; Heine, D.; Leon, M.M.D.O.; Pryor, J.; Patroni, K.; Hallegatte, S. *Measuring Total Carbon Pricing*; The World Bank: Washington, DC, USA, 2023. [CrossRef]
48. Hochreiter, S.; Schmidhuber, J. Long Short-Term Memory. *Neural Comput.* **1997**, *9*, 1735–1780. [CrossRef]
49. Taha, M.F.; Mao, H.; Mousa, S.; Zhou, L.; Wang, Y.; Elmasry, G.; Al-Rejaie, S.; Elwakeel, A.E.; Wei, Y.; Qiu, Z. Deep Learning-Enabled Dynamic Model for Nutrient Status Detection of Aquaponically Grown Plants. *Agronomy* **2024**, *14*, 2290. [CrossRef]
50. Xue, Y.; Jiang, H. Monitoring of Chlorpyrifos Residues in Corn Oil Based on Raman Spectral Deep-Learning Model. *Foods* **2023**, *12*, 2402. [CrossRef] [PubMed]

51. Adade, S.Y.-S.S.; Lin, H.; Nunekpeku, X.; Johnson, N.A.N.; Agyekum, A.A.; Zhao, S.; Teye, E.; Qianqian, S.; Kwadzokpui, B.A.; Ekumah, J.-N.; et al. Flexible paper-based AuNP sensor for rapid detection of diabenz (a,h)anthracene (DbA) and benzo(b)fluoranthene (BbF) in mussels coupled with deep learning algorithms. *Food Control* **2025**, *168*, 110966. [CrossRef]
52. Gu, C. Research on Prediction of Investment Funds Performance before and after Investment Based on Improved Neural Network Algorithm. *Wirel. Commun. Mob. Comput.* **2021**, *2021*, 5519213. [CrossRef]

Disclaimer/Publisher's Note: The statements, opinions and data contained in all publications are solely those of the individual author(s) and contributor(s) and not of MDPI and/or the editor(s). MDPI and/or the editor(s) disclaim responsibility for any injury to people or property resulting from any ideas, methods, instructions or products referred to in the content.