sustainability

MDPI

Article

Towards Sustainable Development of Mineral Resources in Sub-Saharan Africa: A Structural Equation Modeling Approach

Eugenie M. Nyandwe [1,*], Qinli Zhang [1], Daolin Wang [1] and Alassane D. Yeo [2]

[1] School of Resources and Safety Engineering, Central South University, Changsha 410017, China
[2] School of Economics and Trade, Hunan University, Changsha 410012, China; yad.elisec@gmail.com
* Correspondence: eugenienyandwe@yahoo.fr

Abstract: This study focuses on economic, governmental, social, and environmental factors and their impact on the sustainable development of mineral resources in sub-Saharan Africa. Using structural equation modeling (SEM) and data from 40 countries from 2010 to 2022, the research examines the hypothesized links between these factors and sustainable development. The results reveal a positive and statistically significant relationship between economic factors and sustainable development, underlining the crucial role of economic growth in achieving sustainable development goals. Furthermore, effective governance and policy implementation are strongly associated with better sustainable development, underscoring the importance of robust government action. This study also highlights the importance of social factors, demonstrating that increased community involvement and participation contribute positively to sustainable development. Contrary to the initial hypothesis, the research reveals a positive relationship between environmental factors and sustainable development, challenging existing ideas and suggesting the need for a more nuanced understanding of the interaction between environmental practices and sustainability. This study concludes with concrete recommendations, including prioritizing economic growth, improving governance and policy effectiveness, promoting social inclusion, and reassessing environmental conservation strategies. These findings provide valuable information for policymakers, corporations, and communities in sub-Saharan Africa, thus contributing to a more comprehensive understanding of the dynamics of sustainable development in the region.

Keywords: sub-Saharan Africa; sustainable development; mineral resources; structural equation modeling (SEM)

check for updates

Citation: Nyandwe, E.M.; Zhang, Q.; Wang, D.; Yeo, A.D. Towards Sustainable Development of Mineral Resources in Sub-Saharan Africa: A Structural Equation Modeling Approach. *Sustainability* **2024**, *16*, 9087. https://doi.org/10.3390/su16209087

Academic Editor: Antonio Caggiano

Received: 8 August 2024
Revised: 26 August 2024
Accepted: 28 August 2024
Published: 20 October 2024

Copyright: © 2024 by the authors. Licensee MDPI, Basel, Switzerland. This article is an open access article distributed under the terms and conditions of the Creative Commons Attribution (CC BY) license (https://creativecommons.org/licenses/by/4.0/).

1. Introduction

Mineral resources, closely linked to the Earth's geology, are the foundation of modern civilization and underpin technological progress, economic development, and societal evolution. These resources, concentrated in specific geographical areas, encompass a wide range of metals, non-metals, and raw energy materials that form the materials essential to our daily lives. While for millennia, the history of humanity has been marked by the strategic use of metals such as gold and copper, the last fifty years have seen the commercial use of a range of metals such as titanium, tantalum, niobium, cobalt, zirconium, and so on.

This complex interplay between geological processes and human use underlines the vital role of mineral resources in building the very foundations of our societies. From the metals that build imposing structures and pave the way for communication technologies to the non-metallic resources that support agricultural machinery, mineral resources are the discreet architects of progress. Indeed, the exploitation of mineral resources and mining has been an essential factor in the development of societies over the last few millennia [1]. Metals have been crucial in advancing civilization, economic progress, and human well-being, and satisfying human needs [2]. The relentless demand for resources, driven by population

growth, economic expansion, and technological innovation, offers a dynamic picture of the crucial link between mineral resources and the trajectory of human development.

According to United Nations projections, the world's population is expected to reach 9.8 billion by 2050. Such population expansion will increase demand for food production, urbanization, industrialization, and energy-intensive electronic devices [3,4]. At this critical juncture, we need a thorough understanding of the historical roots of mineral resource use and a forward-looking perspective to achieve the complex balance between satisfying current needs and preserving resources for future generations.

In the narrative of mineral importance and societal progress, the paradigm of sustainable development emerges as a guiding principle. First introduced in 1980, the concept of sustainable development advocates a harmonious coexistence between meeting society's current needs and preserving the ability of future generations to meet their own needs. The seminal definition of the World Commission on Environment and Development in 1987 laid the foundation for an evolving understanding of sustainability, converging on the principles of environmental protection, social well-being, and economic prosperity. Accordingly, sustainable development is a transformative process in which resource use, investment allocation, technological progress, and institutional change mutually reinforce and promise to meet current and future human needs [5]. Contemporary interpretations of sustainable development recognize that it is based on harmonizing three fundamental principles encompassing the environment, social well-being and the economy. Ciegis et al. (2009) [6] argue that sustainable development is a long-term concept that recognizes the link between environmental, social, economic, and governmental aspects of development initiatives.

More recently, many studies emphasize the importance of sustainable practices in mining and the need to balance economic considerations with environmental protection and societal concerns. Kogel (2015) [7] underlines the need for the minerals industry to adopt sustainable and responsible practices to meet the increasing demand for minerals while minimizing negative impacts on current and future generations. Zubek (2021) [8] addresses sustainable development challenges in the mining sector, including preventing mineral resource crises and implementing sustainable and responsible business models.

This research stands out for its ability to provide an in-depth and practical understanding of sustainable development in the mining sector, particularly in sub-Saharan Africa. This study validates and advances existing conceptual frameworks by applying structural equation modeling (SEM) by offering empirical evidence on the interdependence between governance, environmental protection, social welfare and economic growth, and sustainable development. This advanced methodological approach allows for more accurate forecasts and tailored policy recommendations, helping policymakers, industry, and mining stakeholders better balance these competing interests. Taking sub-Saharan Africa as an analytical framework, this study highlights the ambivalent nature of mineral exploitation: a powerful engine of economic growth that raises environmental and social challenges. The history of this region, rich in mineral resources, serves as a case study illustrating the delicate balance between the promise of prosperity and the urgent need for sustainability.

2. Conceptual Model and Hypothesis

Sustainable development can be achieved through three main factors: the economy (prosperity), the environment (planet), and the social (people) [9]. The World Commission on Environment and Development addressed various aspects of sustainable development at the summits held in Rio de Janeiro, Brazil, in 1992 and Johannesburg, South Africa, in 2002. The earlier session highlighted the importance of the environment, while the latter report focused on the relationship between environmental protection and economic and social development.

Today, sustainable development issues are not just limited to the government level but are also being adopted by corporations. To positively impact sustainable development, the minerals sector must constantly strive to improve its social, economic, and environmental performance by implementing new and improved governance factors [10].

2.1. Economic Factors

Mineral resources have the potential to contribute significantly to a country's long-term development by promoting economic growth and the equitable distribution of income. According to the "big push" theory suggested by Sachs and Warner (1999) [11], *natural resource booms can act as catalysts for the development of poor countries by generating substantial revenues that can be invested in infrastructure, education, and other critical sectors. In support of this perspective, McMahon and Moreira (2014)* [12] *point out that many nations with the highest growth rates since 2000 are rich in natural resources.* Several studies, however, disagree, suggesting that countries rich in natural resources, particularly minerals, often experience lower economic growth, a phenomenon known as the "resource curse". This paradoxical result is particularly evident in less developed countries, where the economic gains expected from abundant resources are not materializing as expected.

Wright and Czelusta (2003) [13] argue that associating mineral resources with economic growth or sustainable development is sometimes misleading, as mineral production fundamentally involves the depletion of a finite natural "endowment". Their analysis challenges the assumption that mineral wealth intrinsically leads to prosperity, underlining the need for careful management and strategic investment to avoid the pitfalls of resource dependency. Expanding on the complexities of this relationship, Guan et al. (2020) [14] examined the long-term relationship between a country's economic development and its natural resources, emphasizing that the mere presence of resources is insufficient to ensure economic progress. Instead, human capital and globalization play a crucial role in determining whether resource wealth translates into sustainable economic growth.

Hypothesis 1 (H1): *Economic factors positively influence sustainable development.*

2.2. Environmental Factors

The environmental dimension is an essential pillar of the sustainable development framework, particularly when considering activities, products, and services that impact the environment. Bruhn-Tysk and Eklund (2002) [15] emphasize that environmental impact assessment (EIA) is an essential tool for advancing sustainable development by promoting intra- and intergenerational equity. EIA ensures that environmental considerations are integrated into decision-making processes, thereby mitigating the negative impacts of industrial activities, including mining. Sharma et al. (2009) [16] highlight the growing challenge of meeting the increasing demand for urban water infrastructure while complying with strict environmental regulations. This challenge underscores the need for innovative methods of service delivery that reduce water consumption, greenhouse gas emissions, and nutrient discharges. It is essential to address these issues to ensure long-term ecological sustainability, particularly in regions undergoing rapid urbanization.

The large amount of scientific literature on environmental protection [17,18] *reinforces the need for careful management of natural resources to achieve sustainability. In the context of mineral resource extraction, this means adopting strategies that minimize negative impacts on underground and surface geology and the broader environment. Dubiński (2013)* [9] *highlights the major challenge of safeguarding the environment through the sustainable management and regulation of mining practices.* If not carefully managed, the extraction of mineral resources can lead to significant environmental degradation, including soil erosion, water contamination, and loss of biodiversity. To address these challenges, Knoepfel and Nahrath (2005) [19] introduce *the concept of "institutional natural resource regimes" (INRRs)*, which provides a new framework for understanding the complex dynamics of natural resource regulation. This approach combines public policy analysis and institutional resource economics, focusing on the rules governing resource use and user rights. By adopting a *resource-based perspective*, an INRR *offers more* sophisticated *analytical tools for* examining *natural resource* management issues, particularly *in industrialized countries.*

Hypothesis 2 (H2): *Environmental factors negatively influence sustainable development.*

2.3. Social Factors

According to several studies [12,20], mining has played a vital role in improving human well-being and societal development. The correlation between mineral wealth and improvements in well-being indicators is particularly evident in countries where spending on health and education has increased in parallel with growth in mining revenues. This trend has contributed to significant progress in various well-being indicators, including life expectancy, literacy rates, and general living standards. Research suggests that the positive impact of mining is more pronounced in regions with well-established infrastructure and strong economic ties. For example, Parra and Weldegiorgis (2015) [21] used a classical econometric model to demonstrate that large-scale mining development can reduce poverty and promote social progress. Their findings highlight the potential of mining to act as a catalyst for development, particularly in areas where the economic benefits of mining can be reinvested in social services and infrastructure.

Similarly, as a labor-intensive industry, mining offers significant potential for job creation, particularly in remote rural areas with limited economic prospects. Through qualitative and quantitative analysis, Ayodele et al. (2013) [22] reveal that Nigeria's solid minerals sector, alongside revenues from crude oil sales, could significantly boost the country's economy. Their study points out that by promoting growth in the solid minerals sector, Nigeria could reduce poverty by creating employment opportunities, given its interconnection with various economic fields. Akabzaa and Darimani (2001) and Moritz et al. (2017) [23,24] believe that the job creation potential of the mining industry often exceeds that of other sectors such as hospitality, retail, and agriculture. For example, in Dullstroom, Mpumalanga, South Africa, government and mining companies claim that mining is set to significantly outstrip the tourism sector in contributing to much-needed job creation and social development [25].

Hypothesis 3 (H3): *Social factors positively influence sustainable development.*

2.4. Governance Factors

Integrating governance as the fourth dimension of sustainable development is crucial for a comprehensive understanding of economic, environmental, and social aspects [26,27]. *Effective governance integrates these aspects, guaranteeing sustainable and equitable development* [28]. *Historically, the term "governance" referred to government, but its modern interpretation implies a broader range of public and private actors operating across multiple jurisdictions and levels of government* [29–32]. *This evolution reflects the shift from identity-based governance to economic efficiency-based governance, emphasizing* the role of governance in achieving sustainable outcomes [33]. Effective *governance of mineral resources is* essential to maximize *the* benefits of *mining for citizens*. McPhail (2009) [34] points out that countries that avoid *the resource curse* often achieve this through better governance, including revised *mining legislation* and improved *macroeconomic management*. Similarly, Hilson *and* Murck (2000) [35] identify poor *institutions,* revenue detour *and lack of transparency* as the main *reasons for the underperformance of resource-rich sub-Saharan Africa. They* advocate the implementation of *the Extractive Industries Transparency Initiative (EITI*) to *address these* problems but warn *that* without *significant institutional* change, the EITI alone will not be sufficient *to curb corruption and* ensure accountability.

Hypothesis 4 (H4): *Governmental factors positively influence sustainable development.*

3. Methodology

Structural equation modeling (SEM) is a statistical method that allows for researchers to test complex relationships between latent variables and their observed indicators, and to examine the fit of these relationships to empirical data [36]. It is a technique that combines aspects of factor analysis, regression analysis, and path analysis to examine the relationships between variables more comprehensively. Path analysis is a form of structural

equation modeling (SEM), a multivariate statistical analysis that allows for researchers to investigate the interrelationships between independent and dependent variables in a research design [37]. In SEM, we specify a model that includes observed and latent variables. Observed variables are directly measured, while latent variables are not directly observed but inferred from the observed variables. The model specifies the relationships between the latent variables and their indicators and the relationships between the latent variables themselves.

We use SEM software to analyze data collected from various sources in applied SEM. We specify a measurement model that defines the relationships between the latent variables and their observed indicators and a structural model that identifies the relationships between the latent variables. In addition to testing hypotheses about relationships between variables, applied SEM can be used for exploratory data analysis, such as identifying patterns or clusters of variables related to a particular outcome. It can also be used for confirmatory factor analysis, which involves testing whether a set of observed variables is associated with a specific latent construct in a theoretically meaningful way.

Therefore, exploratory factor analysis is an established formal measurement model employed when measuring observed and latent variables on an interval scale [38]. A feature of exploratory factor analysis is that the observed variables are initially normalized, with a mean of 0 and a standard deviation of 1. Confirmatory factor analysis (CFA) is a method employed in statistical analysis to validate the factor structure of a collection of measured variables [39]. Using confirmatory factor analysis (CFA) facilitates the evaluation of the hypothesis that there is a correlation between observed variables and their underlying latent constructs.

Finally, SEM estimates the model parameters using the weighted least squares method and evaluates the model's fit to the data using various fit indices. The model's fit to the data is then evaluated using various fit indices, such as the chi-square statistic, the comparative fit index (CFI), and the root mean square error of approximation (RMSEA).

3.1. Conceptual Model

Based on the literature review, we develop a conceptual model that describes the relationships between the latent variable of sustainable development and its four constituent elements: economic factors, environmental factors, social factors, and governmental factors. The following path diagram, Figure 1, represents the conceptual model:

In this model, the latent variable of sustainable development and its four constructs are represented by a circle, while rectangles represent the observed variables. The arrows indicate the hypothesized directions of the relationships between the constructs and the latent variable.

The hypothesized relationships between the constructs and the latent variable are as follows:

Economic factors: This construct includes indicators such as mineral resource rents, foreign direct investment, trade openness, and economic growth. It is hypothesized that economic factors will positively affect sustainable development.

Environmental factors: This construct includes indicators such as air pollution, natural resource depletion, biodiversity and habitat, GHG per capita emissions, and energy-related CO_2 emissions. It is hypothesized that environmental factors will have a negative effect on sustainable development.

Social factors: This construct includes indicators such as total employers, human development, participation, rights and inclusion, social globalization, population with access to electricity, and primary school enrollment. It is hypothesized that social factors will positively affect sustainable development.

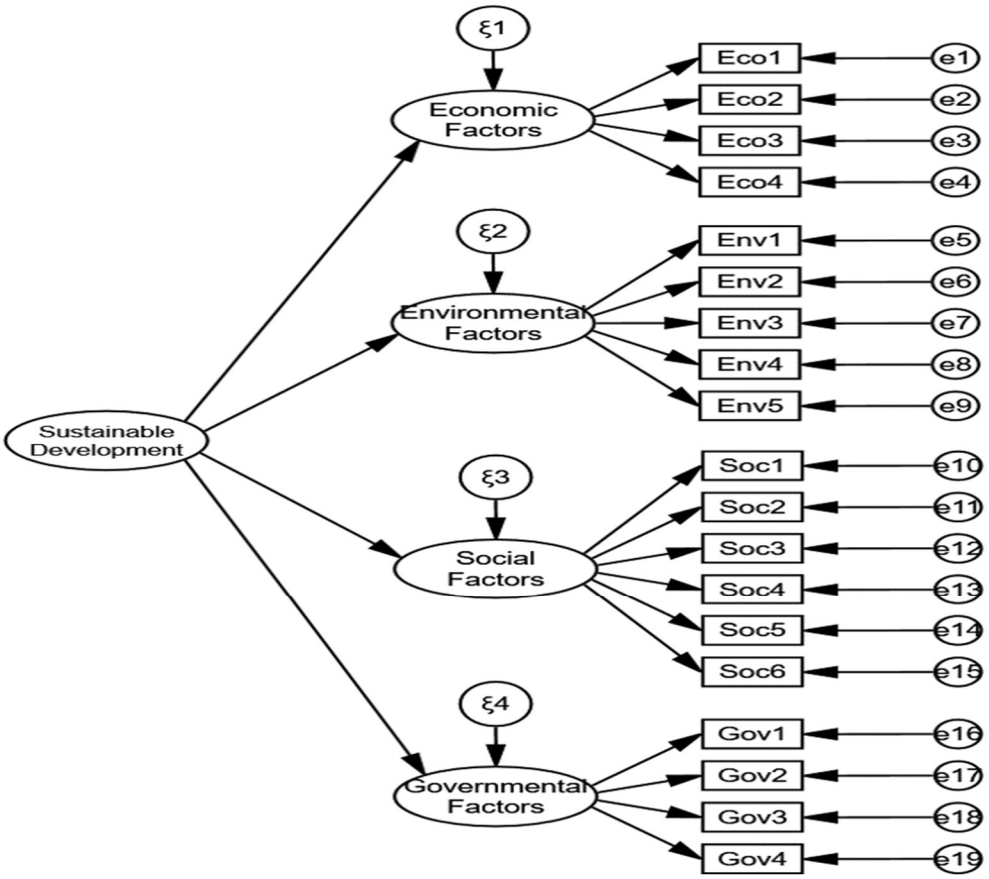

Figure 1. Initial structural equation model.

Governmental factors: This construct includes indicators such as transparency, accountability, corruption in the public sector, government effectiveness, regulatory quality, and political effectiveness. It is hypothesized that governmental factors will positively affect sustainable development.

The conceptual model provides a framework for hypothesizing relationships between the latent variable and its constructs, which can be tested using SEM analysis.

3.2. Data Sources

Data collection is the process of gathering and measuring information on the variables or constructs that are included in a research study. In the context of sustainable development of mineral resources, data were collected from various sources, including the Yale Center for Environmental Law and Policy, Quality of Government Institute, Emission Database for Global Atmospheric Research, Sustainable Development Solutions Network, World Economics and Politics (WEP), and World Bank. The details and descriptions of variables are shown in Table 1.

Since the dataset variables have different scales, it is difficult to compare them directly. However, we performed a data normalization using the min–max scaling method. Indeed, data normalization is a common practice in various fields, particularly data analysis, statistics, and machine learning. Normalization refers to transforming variables into a standard scale or distribution. Data normalization will thus ensure that all variables are on a similar scale, making it easier to compare and analyze their relationships.

Table 1. Variables and description.

Constructs	Items	Abs	Observed Variables	Source of Data	Unit	Error
Economic factors	Foreign direct investment	Ec1	The sum of equity capital, reinvestment of earnings, and other capital.	World Bank	Current USD	e1
	GDP per capita	Ec2	The total gross domestic product is divided by midyear population.	World Bank	Current USD	e2
	Total natural resources rents	Ec3	The sum of oil, natural gas, coal, mineral, and forest rents.	World Bank	% of GDP	e3
	Trade openness	Ec4	The extent to which a country is engaged in the global trading system. Trade openness is usually measured by the ratio between the sum of exports and imports and gross domestic product (GDP).	World Bank	%	e4
Environmental factors	Air pollution	En1	The average level of exposure of a nation's population to concentrations of suspended particles measuring less than 2.5 microns in aerodynamic diameter.	World Bank	Micrograms per cubic meter	e5
	Natural resource depletion	En2	The sum of net forest depletion, energy depletion, and mineral depletion.	World Bank	(% of GNI)	e6
	Biodiversity and Habitat	En3	(BHI) estimates the impacts of habitat loss and degradation on the retention of terrestrial biodiversity.	Yale Center for Environmental Law and Policy	Number	e7
	GHG per capita Emissions	En4	The average amount of greenhouse gases emitted by an individual within a country over a given period.	Emission Database for Global Atmospheric Research	tCO_2/capita	e8
	Energy-related CO_2 emissions	En5	The amount of carbon dioxide released into the atmosphere as a result of human activities related to the production and consumption of energy.	Sustainable Development Solutions Network	tCO_2/capita	e9
Social factors	Employers, total	So1	Workers who, working on their own account or with one or a few partners, hold the type of jobs defined as "self-employment jobs."	Quality of Government Institute	%	e10
	Human development		The process of enlarging people's freedoms and opportunities and improving their well-being.	Quality of Government Institute	Score	e11
	Participation, rights, and inclusion		The right of all people to participate in and access information relating to the decision-making processes that affect their lives and well-being.	Quality of Government Institute	Score	e12
	Social globalization		The sharing of ideas and information between and through different countries.	Quality of Government Institute	Index	e13
	Population with access to electricity	So2	The ratio of a population with access to electricity.	World Bank	% of population	e14
	School enrollment, primary	So3	The ratio of children of official school who are enrolled in school to the population of corresponding official school age.	World Bank	% gross	e15

Table 1. *Cont.*

Constructs	Items	Abs	Observed Variables	Source of Data	Unit	Error
Governmental factors	CPIA transparency, accountability, and corruption in the public sector	Go1	The extent to which the executive can be held accountable for their use of funds and for the results of their actions by the electorate, the legislature, and the judiciary.	Quality of Government Institute	Index	e16
	Government effectiveness	Go2	The ability of a government to formulate and implement policies and deliver public goods and services efficiently.	World Economics and Politics (WEP)	Scale	e17
	Regulatory quality	Go3	The effectiveness and quality of a country's regulatory environment and systems.	World Economics and Politics (WEP)	Scale	e18
	Political effectiveness	Go4	The ability of political actors, institutions, or processes to achieve their intended goals or influence outcomes in the political sphere.	World Economics and Politics (WEP)	Score	e19

The descriptive statistics of the initial models are shown in Table 2. Data were selected for 40 sub-Saharan countries, listed in Table A1 in Appendix A, for 2010 to 2022.

Table 2. Descriptive statistics.

	N	Mean	Std. Error of Mean	Std. Deviation	Skewness	Kurtosis	Min	Max	Sum
Eco1	440	0.472	0.004	0.091	1.046	9.783	0	1	207.610
Eco2	440	0.101	0.007	0.145	2.962	11.509	0	1	44.334
Eco3	440	0.201	0.008	0.171	1.558	2.719	0	1	88.438
Eco4	440	0.390	0.009	0.190	0.482	−0.411	0	1	171.566
Env1	440	0.372	0.010	0.218	0.265	−0.717	0	1	163.523
Env2	440	0.144	0.008	0.164	2.055	5.447	0	1	63.282
Env3	440	0.639	0.012	0.254	−0.562	−0.567	0	1	281.207
Env4	440	0.121	0.007	0.154	2.705	8.394	0	1	53.097
Env5	440	0.093	0.008	0.178	3.489	13.111	0	1	40.976
Soc1	440	0.230	0.010	0.205	1.325	1.597	0	1	101.362
Soc2	440	0.446	0.009	0.180	0.534	0.814	0	1	196.093
Soc3	440	0.517	0.011	0.224	0.032	−0.425	0	1	227.498
Soc4	440	0.361	0.009	0.196	0.963	1.026	0	1	158.862
Soc5	440	0.381	0.013	0.263	0.584	−0.652	0	1	167.642
Soc6	440	0.498	0.010	0.211	0.138	−0.016	0	1	218.965
Gov1	440	0.420	0.010	0.205	0.323	0.288	0	1	184.833
Gov2	440	0.374	0.010	0.211	0.695	0.2	0	1	164.710
Gov3	440	0.453	0.008	0.174	0.529	0.589	0	1	199.214
Gov4	440	0.523	0.018	0.385	−0.047	−1.446	0	1	230.000

4. Model Evaluation

Evaluating the model fit involves examining various fit indices to assess how well the model represents the relationships between the latent variables and their indicators. In structural equation modeling (SEM), data validity and reliability are crucial for conducting reliable and valid research.

4.1. Reliability Test

Reliability in SEM refers to the consistency or stability of the measurement model over time or across different conditions [40]. In other words, reliability is concerned with whether the measurement model produces consistent results when it is administered multiple times or under different conditions. To assess reliability in SEM, researchers typically examine the internal consistency reliability of the observed variables that measure each construct. This can be evaluated using Cronbach's alpha or other measures of internal consistency.

Therefore, all concepts demonstrate good internal consistency, as Cronbach's Alpha values indicate. This suggests that the items within each construct are highly correlated and measure the same underlying construct reliably. AVE values for all constructs are above 0.5, indicating that the underlying constructs capture a substantial proportion of the variance in the items. This suggests good convergent validity (Table 3). These findings indicate that the measurement instruments for economic, governmental, social, and environmental factors are generally reliable and valid, with differences in the strength of these properties across the constructs.

Table 3. Cronbach's alpha and AVE of different constructs.

Variable	Number of Items	Cronbach's Alpha	AVE	Mean	Standard Deviation
Economic factors	4	0.871	0.732	0.273674914	0.099742759
Environmental factors	5	0.849	0.649	0.442475726	0.100370044
Social factors	6	0.905	0.779	0.29087894	0.094362375
Governmental factors	4	0.794	0.509	0.40546309	0.134929346

The coefficient of determination, commonly denoted as R^2, is a measure that indicates the proportion of variance in the dependent variable (endogenous variable) explained by the independent variables (exogenous variables). R^2 ranges from 0 to 1. Higher R^2 values suggest that the independent variables in the model account for a larger proportion of the variability in the dependent variable. For example, the R^2 for regulatory quality is 0.956, which implies that the model explains 95.6% of the variance in regulatory quality. The remaining 4.4% is attributed to other factors not included in the model. The R^2 for total natural resource rents is 0.115, which implies that the model explains 11.5% of the variance in total natural resource rents. The remaining 88.5% is attributed to other factors not included in the model (Table 4).

Table 4. Squared multiple correlations: (R^2).

	Estimate
Eco1	0.242
Eco2	0.289
Eco3	0.115
Eco4	0.098
Env1	0.176
Env2	0.382
Env3	0.177

Table 4. *Cont.*

	Estimate
Env4	0.777
Env5	0.523
Soc1	0.341
Soc2	0.751
Soc3	0.453
Soc4	0.706
Soc5	0.321
Soc6	0.272
Gov1	0.278
Gov2	0.810
Gov3	0.956
Gov4	0.104

4.2. Validity Test

Validity in SEM refers to how the measurement model accurately captures the relationships between the latent variables and their observed indicators [41]. To assess validity in SEM, researchers typically examine various fit indices, such as the comparative fit index (CFI) and the root mean square Error of approximation (RMSEA), to determine how well the model fits the data.

The values provided in Table 5 are commonly used fit indices for assessing the goodness of fit of a structural equation model (SEM) or a measurement model. The x2/df ratio of 2.89 is close to the recommended value of less than 3. This suggests a reasonable fit, considering the ratio is not far from the ideal threshold. The RMSEA value of 0.067 is below the recommended threshold of 0.08. This indicates a good fit, as the model's approximation error is relatively small. The CFI value of 0.943 exceeds the recommended threshold of 0.90. This suggests a good fit, indicating that the model better fits the data than a null model. The IFI value of 0.978 is well above the recommended threshold of 0.90. This indicates a strong fit, suggesting the model improves over a null model. The GFI value of 0.908 is slightly below the recommended threshold of 0.90. While it does not meet the criterion, it is still close and may be considered acceptable in some contexts.

Table 5. Model fit for the measurement model.

Fit Indices	x^2/df	RMSEA	CFI	IFI	GFI
Criteria	<3	<0.08	>0.90	>0.90	>0.90
Model results	2.89	0.067	0.943	0.978	0.908

The model shows a reasonable to good fit based on the fit indices. The x2/df ratio, RMSEA, CFI, and IFI suggest a favorable fit. While the GFI is slightly below the threshold, it is still close, and the overall pattern of fit indices indicates that the model provides a reasonable representation of the observed data.

KMO (Kaiser–Meyer–Olkin) and Bartlett's test are statistical measures used in factor analysis to assess the suitability of data for this technique [42]. The KMO statistic measures the sampling adequacy for factor analysis. It assesses the proportion of variance among variables that might be common variance. It ranges from 0 to 1. The KMO value of 0.734 suggests reasonable sampling adequacy for factor analysis (Table 6).

Table 6. KMO and Bartlett's test.

Kaiser–Meyer–Olkin Measure of Sampling Adequacy.		0.734
Bartlett's Test of Sphericity	Approx. Chi-Square	5795.655
	df	171
	Sig.	0.000

Bartlett's test assesses whether the observed variables in a dataset are correlated and, hence, suitable for factor analysis. The null hypothesis for Bartlett's test is that the correlation matrix is an identity matrix (i.e., variables are uncorrelated). The significant Bartlett's test ($p < 0.05$) indicates that the observed variables are not uncorrelated, supporting the appropriateness of the data for factor analysis.

Once the model fit is satisfactory, the SEM analysis can proceed to the next step, interpreting the results. This involves examining the strength and direction of the relationships between the latent variables and their indicators and discussing the implications of the findings for the sustainable development of mineral resources.

5. Results

Figure 2 shows the results of standardized regression weights from a structural equation model (SEM). Each value represents the relationship between an indicator variable (e.g., Eco1, Env2) and its respective latent variable (e.g., ECO, ENV, SOC, or GOV). The weights indicate the strength and direction of these relationships. Values 0.492, 0.537, 0.339, and 0.313 represent the standardized coefficients for the relationships between the observed variables, Eco1, Eco2, Eco3, and Eco4, and the latent variable ECO. For example, Eco2 has a standardized weight of 0.537, suggesting that a 1-standard deviation increase in Eco2 is associated with a 0.537-standard deviation increase in ECO. Values 0.419, 0.618, 0.420, 0.881, and 0.723 represent the relationships between the observed variables, Env1, Env2, Env3, Env4, and Env5, and the latent variable ENV. For instance, Env4 has a relatively high standardized weight of 0.881, indicating a strong positive relationship between Env4 and ENV. Values 0.584, 0.867, 0.673, 0.840, 0.567, and 0.522 represent the relationships between the observed variables, Soc1, Soc2, Soc3, Soc4, Soc5, and Soc6, and the latent variable SOC. For example, Soc2 has a high standardized weight of 0.867, indicating a strong positive relationship between Soc2 and SOC. Values 0.527, 0.900, 0.978, and 0.323 represent the relationships between the observed variables, Gov1, Gov2, Gov3, and Gov4, and the latent variable GOV. Gov3 has a particularly high standardized weight of 0.978, suggesting a strong positive relationship between Gov3 and GOV.

The results presented in Table 7 show a positive and statistically significant relationship (path coefficient = 0.464) between economic factors and sustainable development. The hypothesis suggests that as economic factors increase, sustainable development is expected to increase as well, and this relationship is not likely due to random chance (statistically significant). Hypothesis H1 is supported. A positive and statistically significant relationship (path coefficient = 0.314) between social factors and sustainable development suggests that as governmental factors increase, sustainable development is also expected to increase. Hypothesis is H3 supported. Governmental factors and sustainable development also have a positive and statistically significant relationship (path coefficient = 0.402). Hypothesis H4 is supported.

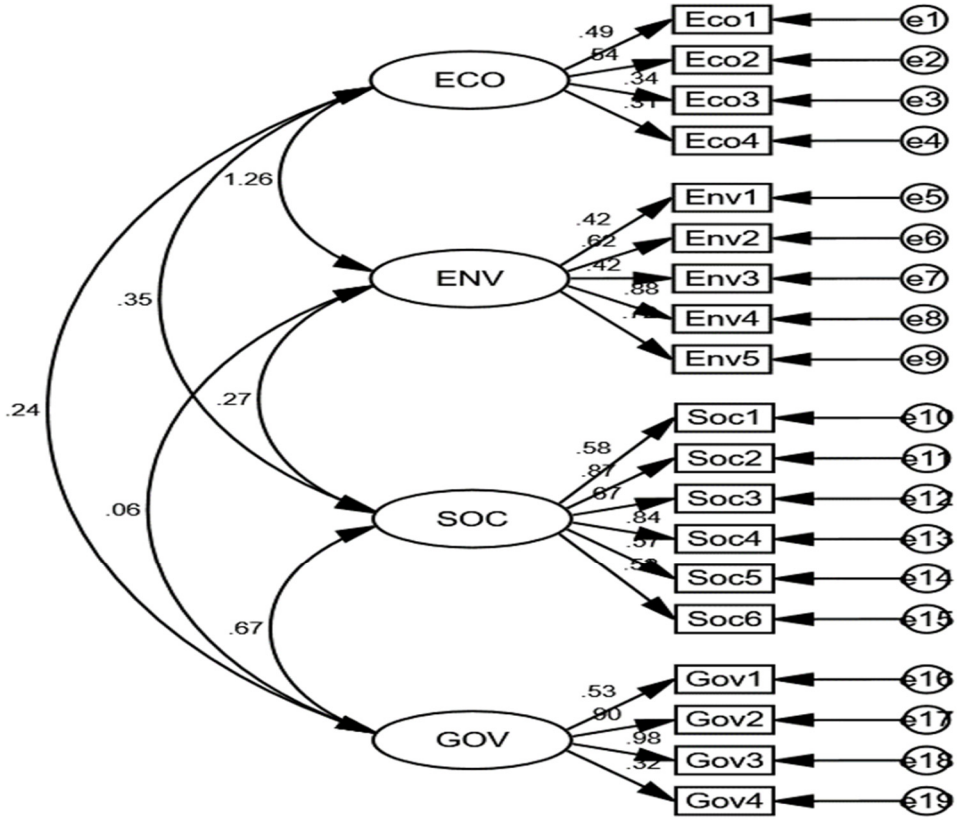

Figure 2. Structural equation model.

Table 7. Hypotheses testing results.

Hypothesis	Path Correlation	Path Coefficient	*p*	Results
H1	Economic factors → sustainable development	0.464	***	Supported
H2	Environmental factors → sustainable development	0.448	***	Not supported
H3	Social factors → sustainable development	0.314	***	Supported
H4	Governmental factors → sustainable development	0.402	***	Supported

Note: *** $p < 0.001$, p-value denotes significance at the 1%.

Finally, the result shows a positive and statistically significant relationship (path coefficient = 0.448) between environmental factors and sustainable development. Hypothesis H2 is not supported.

Hypotheses H1, H3, and H4 are supported and hypothesis H2 is not supported based on the statistical significance of the path coefficients at a high level of confidence ($p < 0.001$). The positive path coefficients and their significance suggest that each factor (economic, governmental, social, and environmental) positively and significantly impacts sustainable development. The path correlations indicate the strength of the linear relationship between the independent and dependent variables. Overall, the results suggest that economic, governmental, social, and environmental factors all play a statistically significant role in influencing sustainable development, supporting the hypotheses formulated in this study.

6. Discussion and Conclusions

The results, obtained using structural equation modeling (SEM), reveal important insights into the relationship between economic, governmental, social, and environmental

factors and their impact on the sustainable development of mineral resources in sub-Saharan Africa. Analysis based on the hypotheses—according to which, for the minerals sector to make a positive contribution to sustainable development, it must constantly strive to improve its social, economic, and environmental performance by implementing and enhancing governance factors—resulted in the following findings:

The positive relationship between economic factors and sustainable development suggests that as economic factors increase, sustainable development is also expected to increase. This aligns with the idea that a stronger economy could contribute positively to sustainable development initiatives [43]. The path coefficient of 0.464 quantifies the strength of the relationship. In practical terms, for every 1-unit increase in Economic factors, there is an expected increase of 0.464 units in sustainable development. This moderate positive effect implies that economic factors play a significant role in contributing to sustainable development. This finding has practical implications for policymakers, businesses, and organizations involved in sustainable economic development planning and suggests that stimulating economic growth can positively contribute to sustainable development goals.

The positive relationship between environmental factors and sustainable development contradicts the initial hypothesis, which proposed a negative effect. This unexpected result suggests that, in the context of our study, environmental factors are positively associated with sustainable development. The results align with the findings of Rajput et al. (2013) [44], who found that the environmental performance index (EPI) positively and significantly impacts economic growth in developing countries. Nazeer et al. (2016) [45] also support this idea, stating that environmental pollution and economic growth are positively linked in developing countries. Considering potential reasons for the observed positive relationship, such as effective environmental policies, conservation efforts, or sustainable practices contributing to sustainable development, policymakers should take note of the unexpected positive relationship and consider policies that support and enhance positive environmental factors. This might involve reinforcing successful environmental conservation programs or introducing new initiatives aligned with sustainability goals. The challenges in reconciling environmental concerns with economic development need to be addressed, and the need for technological progress and collective action for sustainable development is emphasized [46].

The positive relationship indicates that as social factors increase, there is an expected increase in sustainable development. This implies that social factors play a positive and statistically significant role in contributing to sustainable development. The findings emphasize the importance of community engagement and participation in sustainable development initiatives. Social factors, such as community cohesion and involvement, contribute positively to overall development outcomes [47]. As Boutilier (2017) [48] states, strengthening social capital and fostering collaboration among community members are crucial for sustainable development. Policies and initiatives that strengthen social ties and cooperation can enhance the effectiveness of sustainable development efforts. Social factors contribute to inclusive development. Social factors often influence the quality of life within a community. Educational programs and awareness campaigns can play a role in promoting social factors that contribute to sustainable development. Empowering communities with knowledge and skills can lead to informed and sustainable decision-making.

The positive and statistically significant relationship between governmental factors and sustainable development relationship indicates that as governmental factors increase, there is an expected increase in sustainable development. This implies that effective governmental actions, policies, or interventions are associated with improved sustainable development outcomes [49]. The path coefficient of 0.402 quantifies the strength of the relationship. For every 1-unit increase in governmental factors, there is an expected increase of 0.402 units in sustainable development. This coefficient represents the magnitude of the positive effect. The findings underscore the importance of governmental policies, actions, and interventions in driving sustainable development. Effective policies and effective governance can serve as catalysts for positive environmental, social, and economic outcomes.

The findings have practical implications for policymakers, businesses, and organizations involved in planning sustainable economic development. Promoting economic growth, implementing effective government policies, fostering community engagement, and supporting positive environmental practices are identified as key drivers of sustainable development in sub-Saharan Africa. Both researchers and policymakers are encouraged to explore the specific drivers or mechanisms behind this relationship, and to consider its broader implications for future policy and research initiatives.

As a result, the research highlights the multidimensional aspect of sustainable development, demonstrating an integrated approach that takes into account economic, governmental, social, and environmental factors, which are essential to achieve positive and sustainable development outcomes in sub-Saharan Africa. The unexpectedly positive relationship between environmental factors and sustainable development reveals a nuanced understanding and requires further research. While most research has shown that environmental issues, in general, negatively influence sustainable development [50,51], Shavina and Prokofev (2020) [52] reveal that an increase in attention to environmental issues and the transition to green mining can positively impact sustainable development. These findings imply the need for further research to explore the specific mechanisms behind the unexpectedly positive relationship between environmental factors and sustainable development.

Author Contributions: Methodology, A.D.Y.; Software, A.D.Y.; Formal analysis, A.D.Y.; Investigation, E.M.N. and D.W.; Writing—original draft, E.M.N.; Writing—review & editing, E.M.N.; Visualization, D.W.; Supervision, Q.Z. All authors have read and agreed to the published version of the manuscript.

Funding: This research received no external funding.

Institutional Review Board Statement: Not applicable.

Informed Consent Statement: Not applicable.

Data Availability Statement: The raw data supporting the conclusions of this article will be made available by the author upon request.

Conflicts of Interest: The authors declare no conflict of interest.

Appendix A

Table A1. List of the countries.

Country		
Angola	Eswatini	Mozambique
Benin	Ethiopia	Namibia
Botswana	Gabon	Niger
Burkina Faso	Gambia	Nigeria
Burundi	Ghana	Rwanda
Cabo Verde	Guinea	Senegal
Cameroon	Guinea-Bissau	Sierra Leone
Central African Republic	Kenya	South Africa
Chad	Liberia	Tanzania
Comoros	Madagascar	Togo
Congo	Mali	Uganda
Cote d'Ivoire	Mauritania	Zambia
Dem. Rep. Congo	Mauritius	Zimbabwe
Equatorial Guinea		

References

1. Christmann, P. Towards a more equitable use of mineral resources. *Nat. Resour. Res.* **2018**, *27*, 159–177. [CrossRef]
2. Pradeep, T. Noble metal nanoparticles for water purification: A critical review. *Thin. Solid Film.* **2009**, *517*, 6441–6478. [CrossRef]
3. Kuipers, K.J.; van Oers, L.F.; Verboon, M.; van der Voet, E. Assessing environmental implications associated with global copper demand and supply scenarios from 2010 to 2050. *Glob. Environ. Chang.* **2018**, *49*, 106–115. [CrossRef]
4. Krausmann, F.; Gingrich, S.; Eisenmenger, N.; Erb, K.H.; Haberl, H.; Fischer-Kowalski, M. Growth in global materials use, GDP and population during the 20th century. *Ecol. Econ.* **2009**, *68*, 2696–2705. [CrossRef]
5. Strezov, V.; Evans, A.; Evans, T.J. Assessment of the economic, social and environmental dimensions of the indicators for sustainable development. *Sustain. Dev.* **2017**, *25*, 242–253. [CrossRef]
6. Ciegis, R.; Ramanauskiene, J.; Martinkus, B. The concept of sustainable development and its use for sustainability scenarios. *Eng. Econ.* **2009**, *62*, 28–37.
7. Kogel, J.E. Sustainable development and the minerals industry. In *Engineering Solutions for Sustainability: Materials and Resources II*; John Wiley & Sons: Hoboken, NJ, USA, 2015; pp. 23–34.
8. Zubek, M. The aspects of sustainable development in mineral resources management. *Inżynieria Miner.* **2021**, *1*, 113–121. [CrossRef]
9. Dubiński, J. Sustainable development of mining mineral resources. *J. Sustain. Min.* **2013**, *12*, 1–6. [CrossRef]
10. Hilson, G.; Maconachie, R. "Good governance" and the extractive industries in Sub-Saharan Africa. *Miner. Process. Extr. Metall. Rev.* **2008**, *30*, 52–100. [CrossRef]
11. Sachs, J.D.; Warner, A.M. The big push, natural resource booms and growth. *J. Dev. Econ.* **1999**, *59*, 43–76. [CrossRef]
12. McMahon, G.; Moreira, S. *The Contribution of the Mining Sector to Socioeconomic and Human Development*; Extractive industries for development series, 30; World Bank: Washington, DC, USA, 2014.
13. Wright, G.; Czelusta, J. Mineral resources and economic development. In Proceedings of the Conference on Sector Reform in Latin America, Stanford Center for International Development, Stanford, CA, USA, 13–15 November 2003.
14. Guan, J.; Kirikkaleli, D.; Bibi, A.; Zhang, W. Natural resources rents nexus with financial development in the presence of globalization: Is the "resource curse" exist or myth? *Resour. Policy* **2020**, *66*, 101641. [CrossRef]
15. Bruhn-Tysk, S.; Eklund, M. Environmental impact assessment—A tool for sustainable development?: A case study of biofuelled energy plants in Sweden. *Environ. Impact Assess. Rev.* **2002**, *22*, 129–144. [CrossRef]
16. Sharma, A.K.; Grant, A.L.; Grant, T.; Pamminger, F.; Opray, L. Environmental and economic assessment of urban water services for a greenfield development. *Environ. Eng. Sci.* **2009**, *26*, 921–934. [CrossRef]
17. Zhang, K.M.; Wen, Z.G. Review and challenges of policies of environmental protection and sustainable development in China. *J. Environ. Manag.* **2008**, *88*, 1249–1261. [CrossRef]
18. Falk, T. *Communal Farmers' Natural Resource Use and Biodiversity Preservation: A New Institutional Economic Analysis from Case Studies in Namibia and South Africa; [Biodiversity Transect Monitoring Analysis in Southern Africa, BIOTA]*; Cuvillier Verlag: Göttingen, Germany, 2008.
19. Knoepfel, P.; Nahrath, S. *Sustainable Management of Natural Resources: From Traditional Environmental Protection Policies towards Institutional Natural Resource Regimes (INRR)*; Idheap: Lausanne, Switzerland, 2005.
20. Yelpaala, K.; Ali, S.H. Multiple scales of diamond mining in Akwatia, Ghana: Addressing environmental and human development impact. *Resour. Policy* **2005**, *30*, 145–155. [CrossRef]
21. Parra, C.; Weldegiorgis, F. Mining Development and Opportunities for Poverty Reduction and Human Development in Latin America. 2015. Available online: https://ssrn.com/abstract=2699021 (accessed on 23 August 2024).
22. Ayodele, O.S.; Akongwale, S.; Nnadozie, U.P. Economic Diversification in Nigeria: Any Role for Solid Mineral Development? *Mediterr. J. Soc. Sci.* **2013**, *4*, 691. [CrossRef]
23. Akabzaa, T.; Darimani, A. Impact of mining sector investment in Ghana: A study of the Tarkwa mining region. *Third World Netw.* **2001**, *11*, 47–61.
24. Moritz, T.; Ejdemo, T.; Söderholm, P.; Wårell, L. The local employment impacts of mining: An econometric analysis of job multipliers in northern Sweden. *Miner. Econ.* **2017**, *30*, 53–65. [CrossRef]
25. Leonard, L. Mining and/or tourism development for job creation and sustainability in Dullstroom, Mpumalanga. *Local Econ.* **2016**, *31*, 249–263. [CrossRef]
26. Monkelbaan, J. *Governance for the Sustainable Development Goals*; Springer: Singapore, 2019.
27. Spangenberg, J.H. The institutional dimension of sustainable development. *Sustain. Indic. Sci. Assess.* **2007**, *67*, 107–124.
28. Bowen, K.J.; Cradock-Henry, N.A.; Koch, F.; Patterson, J.; Häyhä, T.; Vogt, J.; Barbi, F. Implementing the "Sustainable Development Goals": Towards addressing three key governance challenges—Collective action, trade-offs, and accountability. *Curr. Opin. Environ. Sustain.* **2017**, *26*, 90–96. [CrossRef]
29. Stoker, G. Governance as theory: Five propositions. *Int. Soc. Sci. J.* **1998**, *50*, 17–28. [CrossRef]
30. Fukuyama, F. What is governance? *Governance* **2013**, *26*, 347–368. [CrossRef]
31. Goetz, K.H. Governance as a Path to Government. *West Eur. Politics* **2008**, *31*, 258–279. [CrossRef]
32. Bevir, M. Governance and governmentality after neoliberalism. *Policy Politics* **2011**, *39*, 457–471. [CrossRef]
33. Rodríguez-Pose, A.; Sandall, R. From identity to the economy: Analysing the evolution of the decentralisation discourse. *Environ. Plan. C Gov. Policy* **2008**, *26*, 54–72. [CrossRef]

34. McPhail, K. The challenge of mineral wealth: Using resource endowments to foster sustainable development. In *Mining, Society, and a Sustainable World*; Springer: Berlin/Heidelberg, Germany, 2009; pp. 61–74.
35. Hilson, G.; Murck, B. Sustainable development in the mining industry: Clarifying the corporate perspective. *Resour. Policy* **2000**, *26*, 227–238. [CrossRef]
36. Teo, T.; Tsai, L.T.; Yang, C.C. *Application of Structural Equation Modeling in Educational Research and Practice*; Brill: Boston, MA, USA, 2013; pp. 1–21.
37. Stage, F.K.; Carter, H.C.; Nora, A. Path analysis: An introduction and analysis of a decade of research. *J. Educ. Res.* **2004**, *98*, 5–13. [CrossRef]
38. Heck, R.H. Factor analysis: Exploratory and confirmatory approaches. In *Modern Methods for Business Research*; Psychology Press: London, UK, 1998; pp. 177–215.
39. Gallagher, M.W.; Brown, T.A. Introduction to confirmatory factor analysis and structural equation modeling. In *Handbook of Quantitative Methods for Educational Research*; Brill: Boston, MA, USA, 2013; pp. 287–314.
40. Hancock, G.R.; Mueller, R.O. Rethinking construct reliability within latent variable systems. In *Structural Equation Modeling: Present and Future*; Scientific Software International: Skokie, IL, USA, 2001; pp. 195–216.
41. Dunn, S.C.; Seaker, R.F.; Waller, M.A. Latent variables in business logistics research: Scale development and validation. *J. Bus. Logist.* **1994**, *15*, 145.
42. Shrestha, N. Factor analysis as a tool for survey analysis. *Am. J. Appl. Math. Stat.* **2021**, *9*, 4–11. [CrossRef]
43. Kurniawan, R.; Managi, S. Economic growth and sustainable development in Indonesia: An assessment. *Bull. Indones. Econ. Stud.* **2018**, *54*, 339–361. [CrossRef]
44. Rajput, N.; Kaur, P.; Khanna, A. Relationship of economic growth and environmental performance index: A study of select developing countries. *Int. J. Manag. IT Eng.* **2013**, *3*, 441–453.
45. Nazeer, M.; Tabassum, U.; Alam, S. Environmental pollution and sustainable development in developing countries. *Pak. Dev. Rev.* **2016**, *55*, 589–604.
46. Hugon, P. The Environment and Economic Development: Challenges Raised by Sustainable Development. *Rev. Int. Et Strateg.* **2005**, *60*, 113–126.
47. Bruce, D.W.; Ellis, K.; Delury, N. The role and impact of community newsletters in fostering social cohesion and community development. *J. Rural Community Dev.* **2006**, *1*, 176–185.
48. Boutilier, R. *Stakeholder Politics: Social Capital, Sustainable Development, and the Corporation*; Routledge: London, UK, 2017.
49. Meyer, N.; Auriacombe, C. Good urban governance and city resilience: An afrocentric approach to sustainable development. *Sustainability* **2019**, *11*, 5514. [CrossRef]
50. Dincer, I.; Rosen, M.A. Energy, environment and sustainable development. *Appl. Energy* **1999**, *64*, 427–440. [CrossRef]
51. Feng, C.; Wang, M.; Liu, G.C.; Huang, J.B. Green development performance and its influencing factors: A global perspective. *J. Clean. Prod.* **2017**, *144*, 323–333. [CrossRef]
52. Shavina, E.; Prokofev, V. Implementation of environmental principles of sustainable development in the mining region. In *E3S Web of Conferences*; EDP Sciences: Les Ulis, France, 2020; Volume 174, p. 02014.

Disclaimer/Publisher's Note: The statements, opinions and data contained in all publications are solely those of the individual author(s) and contributor(s) and not of MDPI and/or the editor(s). MDPI and/or the editor(s) disclaim responsibility for any injury to people or property resulting from any ideas, methods, instructions or products referred to in the content.