sustainability

MDPI

Article

Linking Supply Chain Collaboration, Collaborative Advantage, and Firm Performance in China: The Moderating Role of Government Subsidies

Zhe Liu [1,*], Chenghao Jiao [1], Yudong Zhang [2,*] and Jiaji Wang [2]

[1] School of Management, Henan University of Technology, Zhengzhou 450001, China; jiaochenghaomail@163.com
[2] School of Computing and Mathematical Sciences, University of Leicester, Leicester LE1 7RH, UK; jw933@le.ac.uk
* Correspondence: z.liu@haut.edu.cn (Z.L.); yudongzhang@ieee.org (Y.Z.)

Abstract: Supply chain collaboration is acknowledged for its benefits, but realizing these advantages can be challenging. The role of government subsidies in supply chain collaboration, collaborative advantage, and firm performance remains unclear. In this study, we explored how supply chain collaboration can enhance firm performance and the roles of collaborative advantage and government subsidies in that process. Firstly, we reviewed the related literature and proposed our hypotheses. Secondly, we formulated an innovative theoretical framework and issued our questionnaire after a pilot study. After collecting and evaluating the sample data, we utilized structural equation modeling to comprehensively examine those relationships in a supply chain, unlike the previous studies on trust, firm size, etc. Lastly, in the context of government interventions, this study addresses the question: "To what extent do government subsidies influence the relationships among supply chain collaboration, collaborative advantage, and firm performance?" Our findings indicate that supply chain collaboration is fundamental in shaping collaborative advantage and firm performance, while collaborative advantage is crucial in enhancing firm performance. Additionally, government support in the form of subsidies acts as a catalyst, further enhancing the positive outcomes of supply chain collaboration and ultimately benefiting firm performance. This research underscores the strategic significance of supply chain collaboration and government subsidies in promoting overall business success. By illuminating the roles of collaborative advantage and government subsidies in this context, this study contributes to a deeper understanding of the dynamic capability involved in achieving improved firm performance through effective supply chain collaboration.

Keywords: supply chain collaboration; collaborative advantage; firm performance; government subsidies; structural equation modeling

check for updates

Citation: Liu, Z.; Jiao, C.; Zhang, Y.; Wang, J. Linking Supply Chain Collaboration, Collaborative Advantage, and Firm Performance in China: The Moderating Role of Government Subsidies. *Sustainability* **2023**, *15*, 15329. https://doi.org/10.3390/su152115329

Academic Editor: Ripon Kumar Chakrabortty

Received: 11 August 2023
Revised: 4 October 2023
Accepted: 24 October 2023
Published: 26 October 2023

Copyright: © 2023 by the authors. Licensee MDPI, Basel, Switzerland. This article is an open access article distributed under the terms and conditions of the Creative Commons Attribution (CC BY) license (https://creativecommons.org/licenses/by/4.0/).

1. Introduction

Firms across various industries encounter unique challenges in the face of financial crises, the COVID-19 pandemic, and other disruptions [1–3]. Companies recognize that supply chain collaboration (SCC) can reduce expenses while simultaneously improving efficiency and sustainability [4,5]. This is especially true for Chinese manufacturing companies, which rely heavily on labour and struggle with open innovation and resource integration [6,7]. To overcome these challenges, companies seek alliances with other companies in their supply chain to integrate resources and technology, seize market opportunities, and improve their competitive advantage [8]. China has acknowledged the significance of SCC and introduced the concept of "manufacturing synergy", even providing government subsidies (GS), to foster collaborative advantage (CA) and enhance firm performance (FP).

While there are many studies focusing on the definition and outcome of SCC, the path from collaboration to performance is still unclear [9–11]. Dynamic Capabilities Theory

underscores the significance of SCC as a critical dynamic capability, enabling firms to adapt and prosper within an ever-changing business landscape [12,13]. By harnessing internal and external resources, firms can adeptly navigate challenges and capitalize on opportunities, fuelling their sustained long-term success [14]. Hence, we need to explore (i) how SCC can enhance FP and (ii) what are the roles of CA and GS in that process. This implies that companies must collaborate within the supply chain to align their growth efforts and gain a competitive edge [15]. Collaboration allows for practical specialization, cost reduction, and improved innovation efficiency by promoting coordination among companies and their supply chain partners. Through strategic alliances and resource integration, collaboration helps companies meet market demands, enhance their competitiveness, and ensure the overall development of the supply chain [16]. Consequently, we delve into the ways in which SCC can fortify FP, all while acknowledging the pivotal roles played by CA and government intervention.

The primary objectives of this study are to reveal the influence of CA on the relationship between SCC and FP, especially within the context of government subsidies (GS). While the benefits of SCC are acknowledged, realizing these benefits can be challenging [17–19]. China's manufacturing industry is large but lacks refinement, with a low concentration of organizations [20]. Despite the potential of collaboration, many companies are hesitant to fully embrace it, which requires further research to clarify its strategic significance and value [21]. Moreover, the escalating trade disputes between China and the United States have significantly heightened uncertainty in the global market, leading to profound repercussions on industrial policies regarding technological progress and innovation in many nations [22–24]. The successful implementation of initiatives like "Made in China 2025" relies on strong government policies that promote supply chain coordination and establish China's industrial advantages [25]. Thus, our main hypotheses are as follows:

- SCC has a significant direct positive impact on FP.
- CA has a significant positive influence on FP.
- CA acts as a mediating factor between SCC and FP.
- GS moderates the relationship among SCC, CA, and FP.

Compared to traditional regression models, we deployed Structural Equation Modeling (SEM) in this study, consisting of both a measurement model and a structural model, as a potent tool for elucidating the complex relationships among variables [26–29]. The measurement model can recognize the critical elements of SCC, CA, and FP, while the structural model can also provide a deeper understanding of findings of the mediation effect of CA and the moderation effect of GS by comparing path coefficients [30].

Our research stands out as one of the few studies that uncover the pathway from SCC to FP. Our findings suggest that GS plays a role in enhancing the connection between SCC and FP through CA. These findings can help shape government policies for supply chain innovation and guide the traditional manufacturing industry toward innovation-driven growth. Therefore, this study is highly significant because it uncovers meaningful connections between supply chain collaboration and firm profits. The practical insights from this research can inform policies, boost innovation-led expansion, and transform the traditional manufacturing sector. As a result, it provides valuable, timely insights for optimizing supply chain strategies to enhance profitability and sustainability. The rest of the paper is organized as follows. The next section includes the main conceptions and related studies, followed by the proposed hypotheses. We then introduce our methods for questionnaire design, data collection, and evaluation. Further, we provide the analysis process, the results of SEM and sensitivity test. We explore a discussion highlighting our theoretical contributions and practical implications of research findings. Finally, we conclude and indicate our limitations, suggesting avenues for future research.

2. Literature Review

2.1. Supply Chain Collaboration and Collaborative Advantage

Supply chain collaboration is defined from multiple perspectives, focusing on cooperation, relationships, and mutual benefits [9]. It includes collaborative cooperation and information sharing to provide optimal solutions for all participants [31]. This collaboration occurs between at least two enterprises in the supply chain, working together towards common objectives. It is based on long-term partnerships, where members collaborate, share information and resources, and manage risks to achieve shared goals. From a process and relationship perspective, SCC is a partnership that involves close cooperation, planning, and implementation of activities to achieve shared goals and interests among multiple enterprises [32]. Simultaneously, partners within the supply chain face challenges related to sharing sensitive data and making substantial investments [33,34].

The manifestation of SCC yields various benefits, enhancing the market competitiveness of participants and improving service levels, responsiveness to customer needs, product quality, and production efficiency. Through resource sharing, information exchange, and fair distribution of benefits, SCC enhances decision-making efficiency and problem-solving capabilities. By engaging in information sharing, synchronized decision-making, and electronic data exchange with supply chain partners, enterprises can gain sustainable competitive advantages in operating profit margin, cost management, agility, and overall revenue. It addresses the challenges of low success rates and high development costs in independent innovation, thereby ensuring the healthy development of the entire supply chain system [35,36]. As a result, we propose the following hypothesis:

H1. *Supply chain collaboration exerts a substantial positive influence on collaborative advantage.*

2.2. Collaborative Advantage and Firm Performance

Collaborative advantage represents a competitive edge among organizations [37]. SCC offers a strategic benefit by fostering partnerships and value co-creation among supply chain entities, thereby gaining an advantage over market competitors [38–40]. CA encompasses five key dimensions: process efficiency, product flexibility, business collaboration, quality improvement, and collaborative innovation [41]. Process efficiency pertains to the cost advantage achieved through information sharing, logistics integration, product development, joint decision-making, and other processes among supply chain partners [42]. Product flexibility pertains to the degree to which the supply chain modifies product characteristics, quantity, and pace in reaction to shifts in the environment [43]. Business collaboration involves the synergistic effect resulting from the complementary resources of supply chain partners [44]. Quality improvement entails the joint creation of enhanced value for customers by enterprises and their supply chain partners [45]. Collaborative innovation involves jointly developing new processes, products, or services by enterprises and their supply chain partners [46]. These CAs, rooted in process efficiency, product flexibility, business collaboration, quality improvement, and collaborative innovation, can potentially enhance enterprise performance. Accordingly, we posit the following hypothesis:

H2. *Collaborative advantage exerts a significant positive influence on firm performance.*

2.3. Supply Chain Collaboration and Firm Performance

Firm performance encompasses two crucial criteria: the effectiveness and efficiency of various processes within the organization [47]. Adopting SCC as a strategy allows enterprises to achieve substantial performance returns [10]. To accomplish this goal, all participants in the collaboration must take necessary actions, adhere to established rules, and uphold ethical principles to ensure effective functioning. By establishing strategic alliance relationships founded on resource sharing and collaborative decision-making, supply chain partners can optimize the profitability of the entire supply chain. SCC

reduces product delivery time, mitigates the bullwhip effect, enhances customer satisfaction, expands market share, and generates greater profits [48].

The implementation of enterprise information systems to facilitate information sharing, such as demand and inventory data, among upstream and downstream entities in the supply chain can enhance returns on enterprise performance. By fostering process efficiency, flexibility, business collaboration, quality, and innovation, supply chain partners can generate superior FP [49]. Effective communication, cooperation, process innovation, and mechanism design among supply chain partners substantially enhance market responsiveness, reduce transaction costs, and consequently fortify and continuously increase profits. Establishing long-term, stable relationships based on trust and communication among supply chain partners minimizes supply chain risks, leading to improved corporate financial performance [50,51]. Additionally, research suggests that collaborative activities among supply chain enterprises enhance organizational performance by mediating the effects of CAs [52]. Therefore, we posit the following hypotheses:

H3. *Supply chain collaboration exerts a significant direct positive influence on enterprise performance.*

H4. *Collaborative advantage acts as a mediating factor between supply chain collaboration and firm performance.*

2.4. The Moderation Effect of Government Subsidies

Supply chain collaboration, collaborative advantages, and firm performance are subject to the influence of moderating factors, including the size of the enterprise and environmental turbulence [53,54]. GS can play a critical role in specific fields, such as energy transformation and disease prevention, among others [55,56]. In the Chinese context, government subsidy policies hold significant sway over SCC activities and the interplay between SCC, CAs, and enterprise performance [57,58]. This impact is particularly pronounced in areas such as collaborative decision-making within the pharmaceutical supply chain or the collaborative innovation of complex product standard technologies, where GS wields a regulatory effect of particular significance [59,60]. Therefore, this article puts forth the following assumptions:

H5a. *The presence of government subsidies moderates the relationship between supply chain collaboration and collaborative advantages.*

H5b. *The presence of government subsidies moderates the relationship between collaborative advantages and corporate performance.*

H5c. *The presence of government subsidies moderates the relationship between supply chain collaboration and firm performance.*

The theoretical framework of this study is depicted in Figure 1.

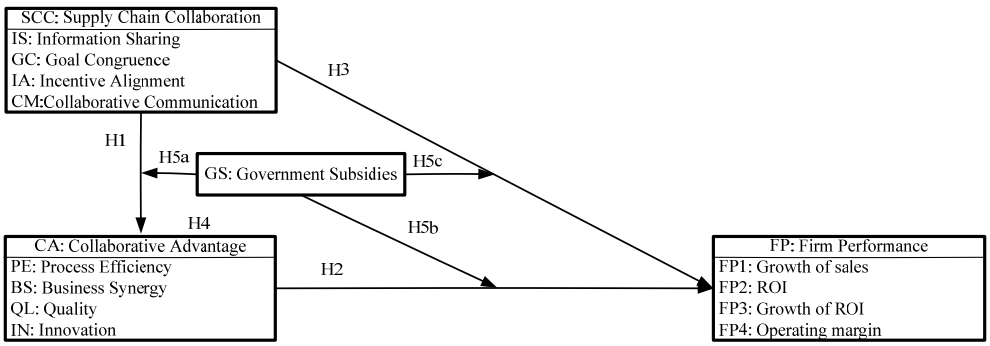

Figure 1. Theoretical framework.

3. Data and Methodology

To advance our research goal of improving our understanding of how to enhance FP through SCC, particularly in the context of government policies, we employed a quantitative approach. This approach allowed us to investigate the intricate relationships among SCC, CA, FP, and GS. Our analysis utilized SPSS version 26.0 and AMOS version 21.0 to assess the questionnaire's quality. A battery of statistical tests was then applied to assess model validity, including a normal distribution test, Exploratory Factor Analysis (EFA), and Confirmatory Factor Analysis (CFA), among others [61,62].

Initially, we conducted a pilot study with a sample size of 30 participants to gather feedback on the language, format, and content of the questionnaire items. Subsequently, we distributed the questionnaires through both online and offline channels. All data were diligently collected and prepared, with the calculated skewness and kurtosis values by SPSS falling below 2 and 5, respectively. This indicates that our sample data adhere to the characteristics of a normal distribution, providing a solid basis for further model testing. Also, we executed Cronbach's alpha tests to assess the reliability of the questionnaire items [61]. Finally, we conducted a sensitivity analysis to evaluate the robustness of our conclusions.

3.1. Sample

The objective of this study was to investigate the correlation among SCC, CA, and FP in the context of GS. The scope of this study encompassed all enterprises that were actively engaged in supply chain partnerships. To ensure that the data collection process was purposeful, measurable, feasible, and cost-effective, this article employed two channels to distribute and collect questionnaires.

Firstly, the online questionnaire platform was utilized to publish the questionnaires online (https://www.wjx.cn/vj/wFwsATH.aspx, accessed on 10 August 2023). Secondly, some selected industry associations, alumni associations, and research institutions from various regions assisted in disseminating the questionnaire to middle and senior managers of relevant enterprises, as well as employees actively involved in SCC. The questionnaire was shared with them as a link, enabling them to fill it out and provide data. This approach was employed to maximize the sample size and ensure the practicality of data collection while enhancing the efficiency of the questionnaire collection process.

Furthermore, to address the issue of missing values, which cannot be overlooked in our survey, we proactively conducted follow-up visits with respondents with a low response rate in the initial questionnaire phase. During these follow-up visits, we carefully addressed missing responses to the outcome variable, and any samples with missing data were subsequently eliminated from our analysis. A total of 321 valid questionnaires were obtained from 346 questionnaires, yielding a recovery rate of 92.7%. Table 1 presents a summary of the sample distribution.

Table 1. Sample statistical distribution.

Item	Classification	Frequency	Percentage
Industry sector	Electrical and mechanical equipment	45	14.0%
	Chemical and pharmaceutical manufacturing	38	11.8%
	Household appliance manufacturing	15	4.7%
	Construction equipment manufacturing	39	12.1%
	Transportation and transportation equipment	31	9.7%
	Communication and electronic equipment	26	8.1%
	Food and beverage manufacturing	45	14.0%
	Instruments and office products	11	3.4%
	Others	71	22.1%

Table 1. *Cont.*

Item	Classification	Frequency	Percentage
Enterprise nature	State-owned enterprises	67	20.9%
	Joint venture	25	7.8%
	Private enterprise	206	64.2%
	Foreign-funded enterprises	11	3.4%
	Others	12	3.7%
Enterprise size	More than 1000 people	94	29.3%
	501–1000 people	30	9.3%
	301–500 people	43	13.4%
	101–300 people	49	15.3%
	51–100 people	44	13.7%
	50 people or less	61	19.0%
Establishment year	More than 15 years	104	32.4%
	11–15 years	50	15.6%
	6–10 years	76	23.7%
	4–5 years	58	18.1%
	3 years or less	33	10.3%
Employee position	Senior manager	22	6.9%
	Middle manager	34	10.6%
	Grassroots manager	73	22.7%
	Ordinary employee	188	58.6%
	Others	4	1.2%

3.2. Instrument and Measures

To guarantee the reliability and validity of the measurement instruments, this study adopted established scales in previous literature to measure concepts such as SCC, CA, GS, and FP [53,63]. These scales were modified appropriately to align with the specific research objectives, resulting in an initial measurement scale, as shown in Table 2. The questionnaire comprised three main sections. The first section provided an explanation of the fundamental concepts related to the variables covered in the questionnaire. The second section collected basic information about the survey participants and their affiliated enterprises. Finally, the third section consisted of the measurement scale, including items related to SCC, CA, and subordinate dimensions of FP. The Likert five-level scale method was employed for rating the survey questionnaire, where participants expressed their degree of disagreement or agreement on a scale that ranged from strongly disagree to strongly agree, assigning corresponding values of 1 to 5 points. Participants were requested to select the response option that best reflects the current situation of their respective enterprises.

3.2.1. Supply Chain Collaboration

SCC can be assessed from four dimensions: information sharing, goal congruence, incentive alignment, and collaborative communication [52]. Information sharing in SCC provides real-time and effective data to improve efficiency and effectiveness. It helps with inventory, demand forecasting, market strategy, production logistics, customer demand, product planning, and uncertainty, injecting momentum into collaboration. Goal congruence shows a willingness to work together. When entities agree on common goals, it strengthens the supply chain relationship and improves performance. Incentive alignment ensures smooth collaboration. Sharing costs and benefits equally motivates enterprises to contribute and achieve individual and overall profit growth. Collaborative communication maintains strong supply chain relationships. Frequent and open communication reduces risks and cost losses and improves competitive advantage.

Table 2. Instruments and dimensions.

Item	Dimension	Code	Questionnaire Option
Supply Chain collaboration	Information Sharing	IS1	Our firm can exchange relevant information within the SC.
		IS2	Our firm can exchange timely information within the SC.
		IS3	Our firm can exchange accurate information within the SC.
		IS4	Our firm can exchange complete information within the SC.
		IS5	Our firm can exchange confidential information within the SC.
	Goal Congruence	GC1	Our firm and SC partners can share the same goals.
		GC2	Our firm and SC partners can identify the importance of shared collaboration.
		GC3	Our firm and SC partners can identify the importance of SC improvements.
		GC4	Our firm and SC partners can achieve our own goals based on SC goals.
		GC5	Our firm and SC partners can achieve the SC goals through collaborative planning.
	Incentive Alignment	IA1	Our firm and SC partners can evaluate each other's performance by sharing systems.
		IA2	Our firm and SC partners have the willingness to jointly bear costs.
		IA3	Our firm and SC partners have the potential to collectively reap benefits.
		IA4	Our firm and SC partners have the capability to distribute risks within the SC.
		IA5	The motivation for our firm can match our risks and investment within the SC.
	Collaborative Communication	CM1	Our firm and SC partners can contact each other regularly.
		CM2	Our firm and SC partners can engage in reciprocal and open communication.
		CM3	Our firm and SC partners can engage in reciprocal and informal communication.
		CM4	Our firm and SC partners can reciprocally communicate through various channels.
		CM5	Our firm and SC partners can mutually influence decisions through discussions.
Collaborative advantage	Process Efficiency	PE1	Our firm and SC partners can meet the unit costs within industry norms.
		PE2	Our firm and SC partners can meet the productivity within industry norms.
		PE3	Our firm and SC partners can meet the delivery requirements within industry norms.
		PE4	Our firm and SC partners can meet the inventory needs within industry norms.
	Business Synergy	BS1	Our firm and SC partners can share information by integrating IT systems.
		BS2	We can share knowledge bases within the SC.
		BS3	We can integrate market efforts within the SC.
		BS4	We can integrate production systems within the SC.
	Quality	QL1	We can deliver highly reliable products by the SC.
		QL2	We can deliver highly durable products by the SC.
		QL3	We can deliver high-quality products by the SC.
		QL4	We can improve product quality by collaboration within the SC.
	Innovation	IN1	We can provide the market with new products quickly by the SC.
		IN2	We can develop new products rapidly by the SC.
		IN3	Our product development cycle is faster than the industry average.
		IN4	We can carry out many innovative activities frequently.
Firm performance	Sale Return ROI Margin	FP1	Our firm and SC partners have experienced an increase in sales.
		FP2	Our firm and SC partners have experienced an increase in returns.
		FP3	Our firm and SC partners have experienced an increase in ROI.
		FP4	Our firm and SC partners have experienced an increase in operating margin.

3.2.2. Collaborative Advantage

CA refers to how participating enterprises can access essential technology, information, and resources. Additionally, they can leverage their partners' resources, thereby enhancing their innovation capabilities, reducing development costs, and ultimately producing high-value, high-quality products. Derived from transaction cost theory, resource-based theory, relationship theory, and resource extension theory, CA can be measured across four dimensions: business synergy, process efficiency, innovation, and quality [64].

3.2.3. Firm Performance

Scholars perceive corporate performance as directly reflecting a company's operational performance and revenue generated over a specific timeframe [47]. Collaborating with supply chain partners enables enterprises to effectively reduce operational and management costs, streamline order and product delivery times, enhance raw material utilization and production capacity, and improve overall production efficiency. This, in turn, leads to a consistent enhancement in enterprise performance [65]. According to Cao et al. (2011), a company's financial performance is a crucial determinant of its success in SCC, and it can be easily measured. This evaluation encompassed growth of sales, return on investment (ROI), operating margin, and growth of ROI.

3.2.4. Government Subsidies

Numerous studies have demonstrated the profound influence of GS on firm behaviors [66,67]. Compared to alternative subsidy methods like direct financial and tax incentives, R&D subsidies reflect the synergy between supply chain enterprises more accurately. Therefore, this article employed R&D subsidies as the representative moderating variable for GS. To investigate the influence of government policies on the collaboration between supply chain enterprises, we categorized the surveyed data into two groups: enterprises receiving GS and those without such subsidies.

3.3. Measure Validation

To examine the hypotheses proposed in Section 2, we adopted a two-step approach utilizing Structural Equation Modeling (SEM) [68,69]. In the initial phase, we utilized Exploratory Factor Analysis (EFA) with SPSS 26.0 to unveil the factorial structure of the measurement scales. The second step involved Confirmatory Factor Analysis (CFA), verifying the factor structure of the latent variables using AMOS 21.0.

We utilized Cronbach's α value to assess the questionnaire's reliability. Generally, a Cronbach's α below 0.65 is considered unacceptable, while a value above 0.85 indicates very high reliability of the questionnaire [70]. Following the principle of enhancing scale reliability, we eliminated items with poor Cronbach's α or those that negatively impacted their main factor's Cronbach's α [71]. Fortunately, we found that Cronbach's α value for all factors and items exceeded 0.7, demonstrating a high level of scale reliability. However, we identified that item IS5 had a detrimental impact on its main factor, SCC, and thus should be removed.

The questionnaire comprises established scales, ensuring a reasonable content validity level. Exploratory Factor Analysis (EFA) was performed to verify whether the items were aligned with the anticipated dimensions. As illustrated in Table 3, the Kaiser–Meyer–Olkin (KMO) test results for SCC, CA, and FP were 0.934, 0.944, and 0.808, respectively. These values surpass the threshold standard of 0.7, with significance levels below 0.01. The explained variance percentages for the SCC, CA, and FP scales were 62.302%, 65.438%, and 67.499%, respectively. Additionally, the factor load coefficient of each item exceeded 0.5, adhering to the predetermined dimension distribution standard as shown in Tables 4–6. We also identified that the item of IN4 was redundant and subsequently removed from the analysis.

Table 3. KMO and Bartlett Test.

Variable	KMO	Bartlett Test		
		Approx. Chi-Square	df	*p* Value
Supply chain collaboration	0.934	3005.800	171	***
Collaborative advantage	0.944	2460.193	120	***
Firm performance	0.808	496.811	6	***

Note: *** less than 0.001.

Subsequently, we employed Confirmatory Factor Analysis (CFA), as shown in Tables 7–9, to evaluate the convergence effectiveness by assessing the model's reliability through two parameters: composite reliability (CR) and average variance extracted (AVE). Normally, when the Average Variance Extracted (AVE) surpasses 50%, and the Composite Reliability (CR) is higher than 0.70, it suggests that the variance of eigenvalues exceeds the variance of error components [72]. Nevertheless, AVE values above 0.4 and CR values greater than 0.6 are deemed acceptable as well [73].

Table 4. Exploratory factor analysis of SCC.

	Factor Loading (Rotated)				
	Item	Component			
		Factor 1	Factor 2	Factor 3	Factor 4
Supply chain collaboration	IS1				0.701
	IS2				0.645
	IS3				0.732
	IS4				0.577
	GC1		0.704		
	GC2		0.698		
	GC3		0.692		
	GC4		0.647		
	GC5		0.635		
	IA1			0.651	
	IA2			0.735	
	IA3			0.680	
	IA4			0.646	
	IA5			0.533	
	CM1	0.612			
	CM2	0.659			
	CM3	0.714			
	CM4	0.743			
	CM5	0.715			
	% of Variance	45.326%	6.332%	6.012%	4.632%
		62.302%			

Table 5. Exploratory factor analysis of CA.

	Factor Loading (Rotated)				
	Item	Component			
		Factor 1	Factor 2	Factor 3	Factor 4
Collaborative advantage	PE1			0.671	
	PE2			0.629	
	PE3			0.613	
	PE4			0.757	
	BS1	0.728			
	BS2	0.596			
	BS3	0.741			
	BS4	0.666			
	QL1		0.727		
	QL2		0.691		
	QL3		0.689		
	QL4		0.612		
	IN1				0.663
	IN2				0.703
	IN3				0.718
	IN4	0.604 [a]			
	% of Variance	47.539%	6.760%	6.234%	4.905%
		65.438%			

Note [a]: The item of IN4 needs to be eliminated due to the mismatch.

Table 6. Exploratory factor analysis of FP.

	Item	Factor Loading
Firm performance	FP1	0.817
	FP2	0.818
	FP3	0.782
	FP4	0.867
	% of Variance	67.499%

Table 7. Confirmatory Factor Analysis of SCC.

Item	Standardized Regression Weight	*t*-Value	CR	AVE	Cronbach's Alpha
IS1	0.709	-	0.822	0.537	0.791
IS2	0.759	12.379			
IS3	0.71	11.629			
IS4	0.746	12.176			
GC1	0.729	-	0.848	0.529	0.847
GC2	0.712	12.151			
GC3	0.778	13.279			
GC5	0.716	12.223			
GC4	0.69	11.782			
IA1	0.627	-	0.814	0.466	0.813
IA2	0.67	9.813			
IA3	0.714	10.292			
IA4	0.693	10.064			
IA5	0.723	10.385			
CM1	0.741	-	0.841	0.514	0.843
CM4	0.701	12.035			
CM2	0.744	12.789			
CM3	0.691	11.860			
CM5	0.712	12.232			

Table 8. Confirmatory Factor Analysis of CA.

Item	Standardized Regression Weight	*t*-Value	CR	AVE	Cronbach's Alpha
PE1	0.758	-	0.812	0.52	0.816
PE2	0.764	13.347			
PE3	0.709	12.346			
PE4	0.652	11.299			
BS1	0.711	-	0.811	0.519	0.814
BS2	0.69	11.238			
BS3	0.743	12.025			
BS4	0.729	11.829			
QL1	0.751	-	0.821	0.536	0.823
QL2	0.679	11.706			
QL3	0.763	13.207			
QL4	0.728	12.589			
IN1	0.75	-	0.744	0.493	0.779
IN2	0.713	11.602			
IN3	0.648	10.595			

Table 9. Confirmatory Factor Analysis of FP.

Item	Standardized Regression Weight	*t*-Value	CR	AVE	Cronbach's Alpha
FP1	0.735	-	0.84	0.57	0.839
FP2	0.751	12.330			
FP3	0.681	11.242			
FP4	0.844	13.292			

The results revealed that the AVE values for the four SCC factors were 0.537, 0.529, 0.466, and 0.514, respectively, with CR values exceeding 0.8 for all factors. Similarly, the AVE values for the four CA factors were 0.52, 0.519, 0.536, and 0.493, respectively, with CR values greater than 0.7. Furthermore, the AVE value for FP was 0.57, with a CR of 0.84. Based on these results, the scale demonstrated satisfactory convergent validity. As evidenced in Table 10, all interstructure correlations remained below 0.85 regarding discriminant validity. Additionally, the square root of the AVE for each factor exceeded the correlation coefficients observed between the respective factor and other variables. These findings collectively affirmed a robust state of discriminant validity for the measurement scale.

Table 10. Correlations between constructs (n = 321).

Variable	IS	GC	IA	CM	PE	BS	QL	IN	FP
IS	0.733								
GC	0.706 ***	0.727							
IA	0.641 ***	0.625 ***	0.684						
CM	0.634 ***	0.667 ***	0.652 ***	0.717					
PE	0.609 ***	0.627 ***	0.671 ***	0.645 ***	0.72				
BS	0.537 ***	0.499 ***	0.607 ***	0.503 ***	0.673 ***	0.72			
QL	0.561 ***	0.554 ***	0.514 ***	0.546 ***	0.683 ***	0.627 ***	0.732		
IN	0.513 ***	0.468 ***	0.531 ***	0.475 ***	0.582 ***	0.624 ***	0.636 ***	0.702	
FP	0.522 ***	0.566 ***	0.618 ***	0.56 ***	0.584 ***	0.536 ***	0.577 ***	0.544 ***	0.756

Note: The square root of AVE is on the diagonal. *** $p < 0.001$.

In the realm of depicted relationships, as illustrated in Figure 2a, the path coefficient among the four principal factors surpasses 0.7, underscoring the existence of a higher-order dimension that encapsulates the overarching attributes of these four indicators. Figure 2b shows this higher-order dimension, termed SCC. Analogously, in Figure 3a, the path coefficient linking the four key factors exceeds 0.75, leading us to label this overarching dimension as CA in Figure 3b. Likewise, in Figure 4, the manifestation of FP is evident, with factor loadings surpassing 0.7, signifying the robust coherence of this construct.

Collectively, the outcomes of the model fit analysis affirm the robust convergence efficiency of the data, as presented in Table 11. For the first-order model of SCC, the indices are as follows: $\chi^2/df = 2.217$, RMSEA = 0.062, GFI = 0.908, CFI = 0.939, NFI = 0.895, and AGFI = 0.880. Moving to the second-order model, the fit indices are $\chi^2/df = 2.236$, RMSEA = 0.062, GFI = 0.906, CFI = 0.937, NFI = 0.892, and AGFI = 0.880. Similarly, in the context of CA, the fit indices for the first-order structure are $\chi^2/df = 2.015$, RMSEA = 0.056, GFI = 0.932, CFI = 0.961, NFI = 0.927, and AGFI = 0.903. Likewise, for the second-order structure of CA, the fit indices are $\chi^2/df = 2.069$, RMSEA = 0.058, GFI = 0.929, CFI = 0.958, NFI = 0.923, and AGFI = 0.901. The model of FP also demonstrates consistent fit, with indices as follows: $\chi^2/df = 1.001$, RMSEA = 0.002, GFI = 0.997, CFI = 1.000, NFI = 0.996, and AGFI = 0.984.

Table 11. Fit indices of the measurement model.

Dimension	Validity (Goodness of Fit)						
	Model	χ^2/df	GFI	AGFI	RESEA	NFI	CFI
Supply chain collaboration	first-order	2.217	0.908	0.880	0.062	0.895	0.939
	second-order	2.236	0.906	0.880	0.062	0.892	0.937
Collaborative advantage	first-order	2.015	0.932	0.903	0.056	0.927	0.961
	second-order	2.069	0.929	0.901	0.058	0.923	0.958
Firm performance		1.001	0.997	0.984	0.002	0.996	1.000

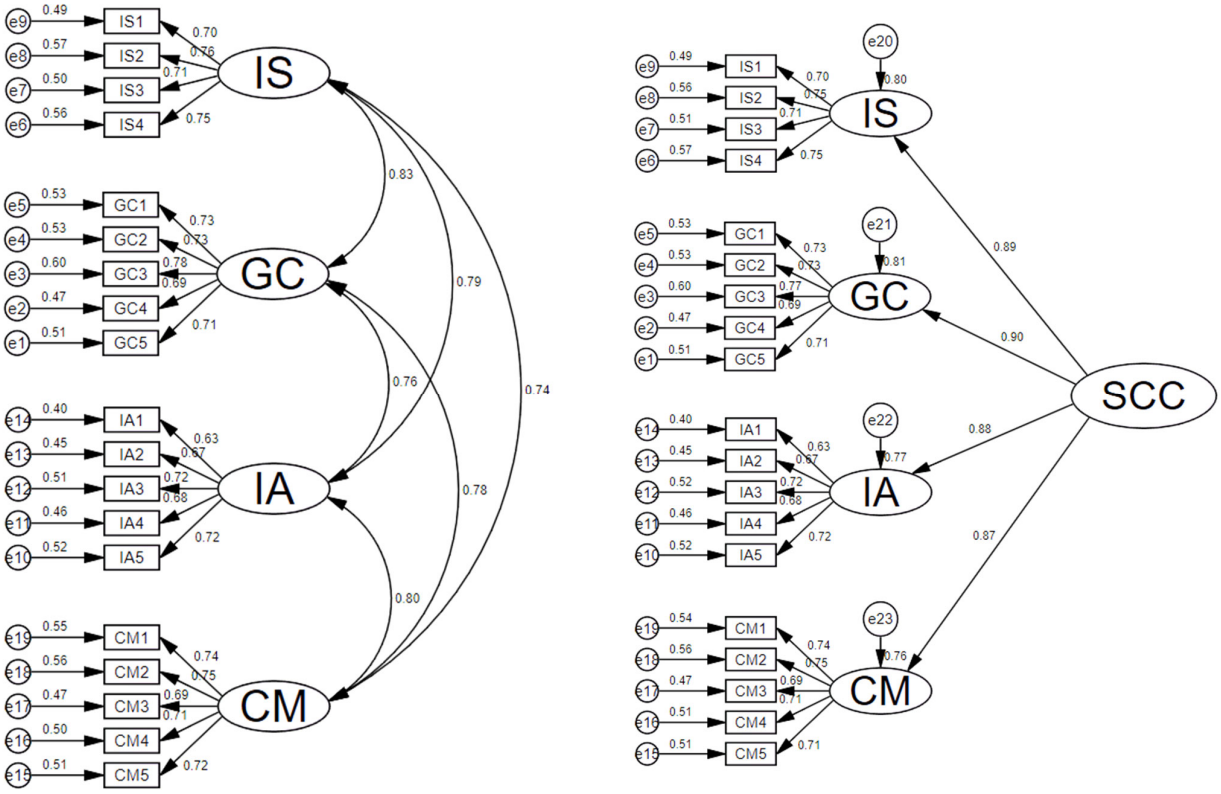

(**a**) (**b**)

Figure 2. First-order model (**a**) and second-order (**b**) measurement model of SCC.

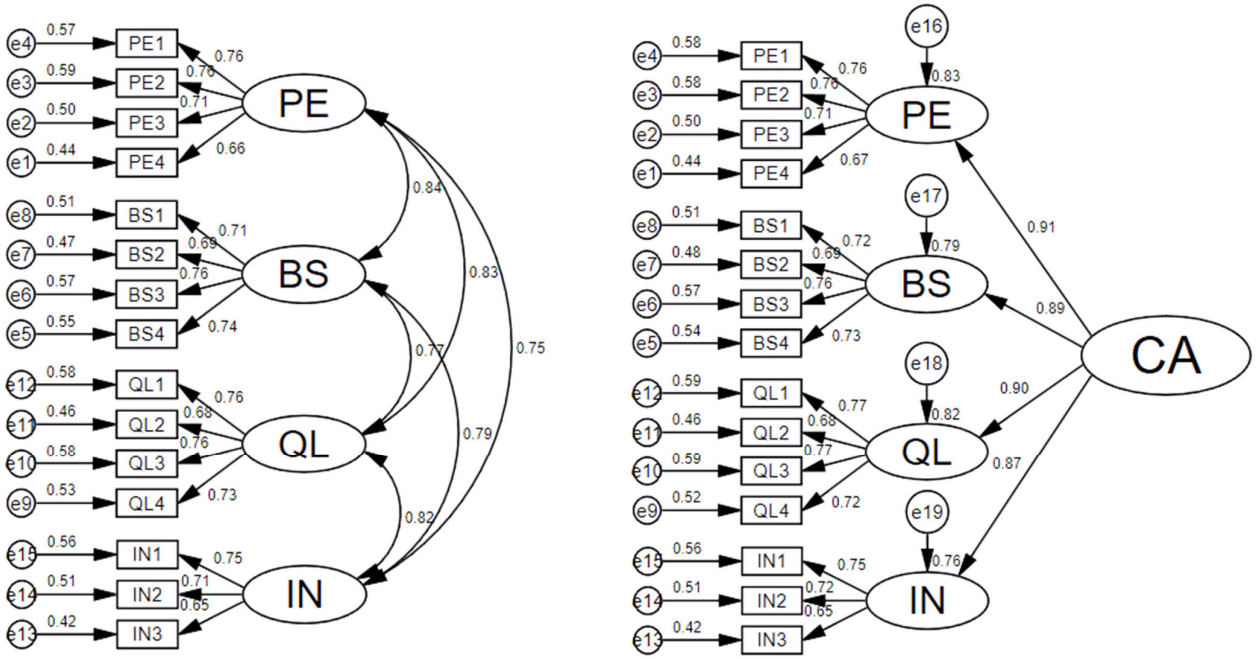

(**a**) (**b**)

Figure 3. First-order model (**a**) and second-order (**b**) measurement model of CA.

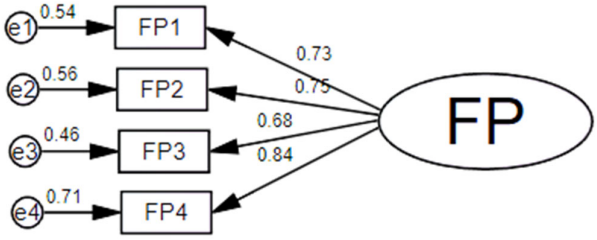

Figure 4. Measurement model of FP.

4. Analyses and Results

4.1. Mediation Effect of Collaborative Advantage

We tested the hypotheses by establishing a structural equation model and utilized the maximum likelihood method for calculations using Amos software version 21.0, illustrated in Figure 5. Since SCC and CA in the model consist of four low-order dimensions each, with varying quantities of items (ranging from three to five) under each dimension, it would be impractical to include the measurement model entirely for fit assessment. To address this issue, this paper opts to explicitly calculate the scores of potential variables using the low-order variables. Presently, there are various methods for calculating latent variable scores, including (1) summing up the items of the same scale, (2) calculating the latent variable using the items with the highest factor loadings, and (3) aggregating items with high Measurement Invariance (MI) values based on the CFA results. Considering the research context of this paper, we have chosen to sum up the items and calculate the average value to derive the corresponding latent variable scores.

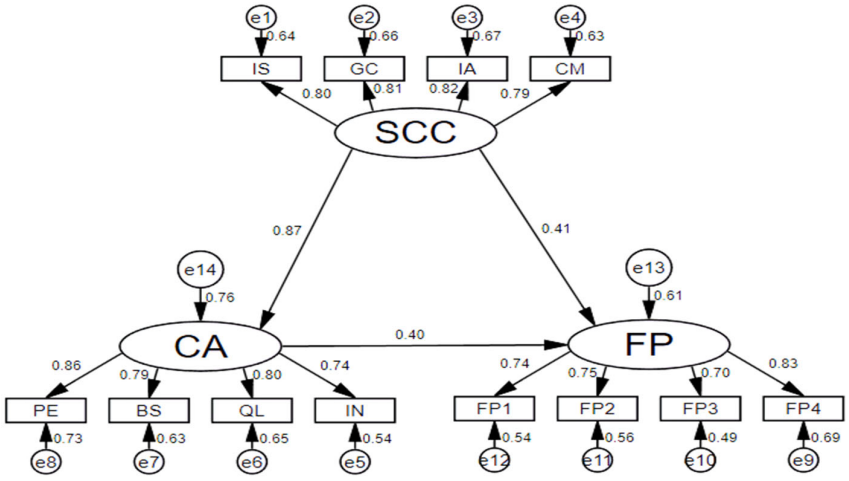

Figure 5. Mediation effect of collaborative advantage.

As shown in Table 12, the fitting coefficients of the basic model are satisfactory, with $\chi^2/df = 1.899$, RMSEA = 0.053, GFI = 0.953, CFI = 0.980, NFI = 0.960, and AGFI = 0.928, meeting the standard for good model fit. The path coefficients of SCC→CA are 0.847, significant at the 0.01 level, supporting Hypothesis 1 and indicating that SCC has a significant positive impact on CA. Similarly, the path coefficients of CA→FP are 0.396, significant at the 0.01 level, supporting Hypothesis 2, demonstrating that CA positively influences corporate performance. Moreover, the path coefficients of SCC→FP are 0.414, significant at the 0.01 level, confirming Hypothesis 3, highlighting the substantial positive impact of SCC on FP.

Table 12. Fit indices of the structural model.

Structural Path	Standardized Estimate	S.E.	C.R.	*p*	Model Fit					
					χ^2/df	GFI	AGFI	RESEA	NFI	CFI
H1. SCC→CA	0.847	0.063	12.564	***						
H2. CA→FP	0.396	0.170	3.037	0.002	1.899	0.953	0.928	0.053	0.960	0.980
H3. SCC→FP	0.414	0.156	3.154	0.002						

Note: *** $p < 0.001$.

To explore whether CA acts as a mediator between SCC and FP (H4), we employed the bootstrap method, and the results revealed that the total effect, direct effect, and indirect effect of SCC→FP were significant. This indicates that CA plays a partial mediating role between SCC and FP. As expected, through complementary advantages, information sharing, and collaborative decision-making, SCC facilitates cost reduction, minimizes errors, and accelerates the process of introducing novel products to the market, leading to significant improvements in enterprise performance.

4.2. Moderation Effect of Government Subsidies

While this paper has successfully clarified the impact relationship among SCC, CA, and FP, a key focus of our investigation is whether GS moderates the impact path of SCC→CA, CA→FP, and SCC→FP. We aimed to explore potential differences in the impact paths between subsidized and non-subsidized enterprises. To verify hypotheses H5a, H5b, and H5c, we categorized the 321 survey samples (with GS = 147, without GS = 174) into two groups: subsidized and non-subsidized. We employed the multigroup analysis in Amos software version 21.0 and tested the hypotheses by comparing the unrestricted model with the restricted model (structural weights). From Table 13, we observe that the fitting degree of the unrestricted and restricted models for SCC→CA, CA→FP, and SCC→FP reach a good standard. Regarding H5a, the chi-square variance ($\Delta\chi^2$) in Table 6 is 9.470, and the difference in the degree-of-freedom (Δdf) is 11, which does not reach statistical significance ($p > 0.05$), thereby not supporting the hypothesis. In contrast, the chi-square variance for H5b is 20.275, with Δdf of 11, which is significant at the 0.05 level, supporting the hypothesis of H5b. Similarly, the chi-square variance for H5c is 20.464, with Δdf of 11, significant at the 0.05 level, supporting the hypothesis of H5c.

Table 13. The moderation effect of government subsidies using multigroup analysis.

Hypothesis	Model	CMIN	DF	CMIN/DF	GFI	AGFI	RESEA	NFI	CFI	$\Delta\chi^2$	Δdf	*p*
H5a. SCC→CA	Unrestricted	152.421	102	1.494	0.928	0.890	0.039	0.936	0.978	9.57	11	0.579
	Restricted	161.981	113	1.433	0.924	0.895	0.037	0.932	0.978			
H5b. CA→FP	Unrestricted	152.421	102	1.494	0.928	0.890	0.039	0.936	0.978	20.276	11	0.042 *
	Restricted	172.697	113	1.528	0.917	0.886	0.041	0.928	0.974			
H5c. SCC→FP	Unrestricted	152.421	102	1.494	0.928	0.890	0.039	0.936	0.978	20.464	11	0.039 *
	Restricted	172.885	113	1.530	0.917	0.886	0.041	0.928	0.974			

Note: * $p < 0.05$.

To conduct a more in-depth analysis of the moderation effect of GS, we present in Table 14 the differences in the standardized path coefficients of SCC→CA, CA→FP, and SCC→FP between samples with and without GS. We categorized the sample into two groups: enterprises with GS (With GS) and enterprises without GS (Without GS). We constructed structural equation models to explore the differences in the influence paths among variables SCC, CA, and FP.

Table 14. Moderation effect of GS.

SCC→FP	Type	Bootstrapping		
		Bias-Corrected Confidence Interval		*p*
		Lower-Bound	Upper-Bound	
Total effect	With GS	0.537	0.794	0.001
	Without GS	0.843	1.275	0.001
direct effect	With GS	−0.128	0.570	0.180
	Without GS	0.243	1.351	0.006
indirect effect	With GS	0.177	0.794	0.004
	Without GS	−0.503	0.553	0.643
Mediation effect of CA on the relationship of SCC and FP	With GS	Complete mediation		
	Without GS	no mediation effect		

The results, as shown in Table 12, indicate that enterprises with GS have significant impact relationships between SCC and CA, as well as CA and FP; however, the path coefficient between SCC and FP is not statistically significant. On the other hand, enterprises without GS show a significant impact relationship between SCC and CA, and between SCC and FP, but the path coefficient between CA and FP is not significant. Moreover, we employed the bootstrap method to analyze the mediation effect of CA in both types of enterprises. The results, presented in Table 7, reveal that for enterprises with GS, the total effect and indirect effect of the SCC→FP path are significant, while the direct effect is not. This indicates that CA plays a complete mediation role. Conversely, for enterprises without GS, the total effect and direct effect of the SCC→FP path are significant. Still, the indirect effect is not significant, indicating that CA does not mediate in this case.

The results, illustrated in Figure 6, show exciting findings regarding the associations between SCC→CA, CA→FP, and SCC→FP, both with and without GS. Surprisingly, the path coefficient of unsubsidized SCC→CA (Path subsidy = 0.884) is slightly higher than that with subsidies (Path subsidy = 0.686), contrary to previous research. However, considering the research context of this article, it holds practical significance. CAs are naturally facilitated during the co-creation of value with supply chain partners. Consequently, GS may have minimal additional impact. Instead, the trust and cooperative attitudes among supply chain members play a more significant role in ensuring the stability of the collaborative alliance. Enterprises without GS may encounter market competition disadvantages due to funding constraints. As a result, SCC becomes their avenue for hope and a potential "game-changer." They invest more effort and resources in the collaborative process, thus amplifying the positive output effect of this collaboration to establish advantages.

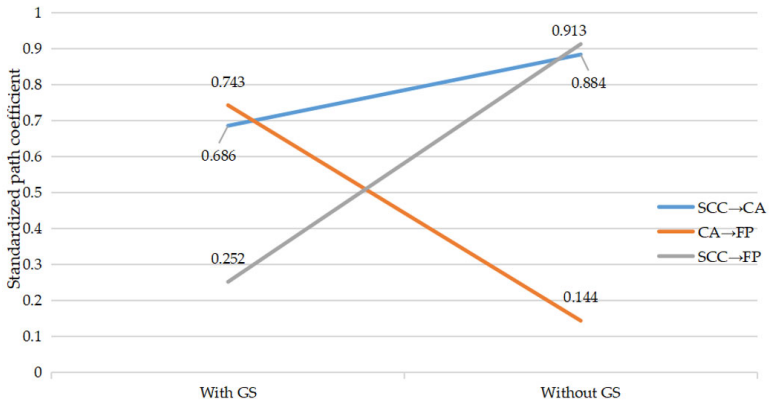

Figure 6. Standardized path coefficient of SCC→CA, CA→FP, SCC→FP.

Regarding the association of CA→FP, the path with GS (Path subsidy = 0.743) is significant, while the path without GS (Path subsidy = 0.144) is not. This suggests that GS effectively assists companies in transforming collaborative advantages into corporate performance. While co-creating value with partners can establish unmatched CAs, companies may struggle to promptly capitalize on these advantages due to technological and cash flow constraints. GS alleviates the financing pressure of the collaborative alliance, enhances enterprise collaboration enthusiasm, and facilitates the transformation of CAs into tangible performance improvements.

For the association of SCC→FP, the path with GS (Path subsidy = 0.252) is insignificant, whereas the path without GS (Path subsidy = 0.913) is significant, deviating somewhat from previous research but bearing practical implications. Enterprises inevitably incur losses in terms of time, resources, and costs during collaborative activities. Consequently, they tend to collaborate with stronger partners, allowing them to access better technology and resources while bearing fewer costs. Even if the collaborative outcomes fall short of expectations, GS can mitigate losses and reduce the fault tolerance rate for collaborative failures. Enterprises heavily invest in collaborative alliances without government support, hoping for a turnaround. In this context, the quality of SCC outcomes exerts a more pronounced influence on enterprise performance.

4.3. Sensitivity Analysis

To further enhance the robustness of the results, we chose to utilize the stepwise regression analysis method. This approach involves gradually removing variables to assess each subdimension's contribution to the model. As depicted in Table 15, concerning the association between SCC and CA, the regression results indicate an R2 value of 0.450, explaining 45.0% of the variance in the dependent variable. The F-statistic value is 64.830, indicating statistical significance in our regression model. The standardized coefficients for IA, GC, and CM stand at 0.354, 0.200, and 0.165, respectively. These values denote a significant influence of each variable on FP, albeit with decreasing effects. The *p*-value for the dimension IS is 0.443, indicating no significant impact. Turning to the relationship between CA and FP, the regression results yield an R2 of 0.435, accounting for 43.5% of the variance in the dependent variable. The F-statistic value is 60.941, confirming the statistical significance of our regression model. The standardized coefficients for PE, QL, and IN are 0.251, 0.212, and 0.191, respectively, affirming their significant impact on firm performance with diminishing effects. The *p*-value for the dimension BS is 0.069, suggesting no significant impact. Lastly, regarding the relationship between SCC and FP, the regression result shows an R2 of 0.574, explaining 57.4% of the variance in the dependent variable. The F-statistic value is 106.473, affirming the statistical significance of our regression model. The standardized coefficients for IA, IS, CM, and GC are 0.330, 0.221, 0.183, and 0.143, respectively, indicating their significant influence on FP. Stepwise regression analysis revealed that the most influential factor contributing to CA and FP within SSC is Incentive Alignment (IA).

To assess the robustness of our results, we incorporated insights from previous research and implemented a 5% winsorize treatment on our sample data [74]. This treatment was intended to minimize the impact of outliers on our findings. Following this, we employed Amos software version 21.0 to reexamine our initial assumptions using the winsorized data. The subsequent results consistently corroborated our earlier conclusions, assuring that robustness bias does not seem to undermine the validity of our findings.

Table 15. Sensitivity analysis results.

Structural Path	Dimension	Standardized Coefficient	*p*	R^2	F	Sig
SCC→CA	IS	0.049	0.443	0.450	64.830	***
	GC	0.200	**			
	IA	0.354	***			
	CM	0.165	**			
	PE	0.251	***			
CA→FP	BS	0.115	0.069	0.435	60.941	***
	QL	0.212	**			
	IN	0.191	**			
SCC→FP	IS	0.221	***	0.574	106.473	***
	GC	0.143	*			
	IA	0.330	***			
	CM	0.183	**			

Note: * $p < 0.05$, ** $p < 0.01$, *** $p < 0.001$.

5. Discussion and Implications

5.1. Theoretical Contribution

The study contributes to the field of SCC, providing valuable insights for researchers to understand how collaboration leads to competitive advantages and improved performance. This paper delves into examining relationships among SCC, CA, and FP. Furthermore, it extends its analysis by investigating the moderating impact of GS on these relationships, utilizing questionnaire data for comparison with previous research studies [75,76].

The results indicate that SCC effectively helps enterprises and partners establish CAs. By sharing information, technology, and resources, both parties can establish equal incentive mechanisms and collaborative decision-making processes, leading to improved and innovative products, enabling them to catch up with competitors. CA is crucial in enhancing FP, especially in a general market environment without government intervention. Previous studies neglected this intermediate variable and directly linked SCC to FP, but the value generated through collaboration and shared resources contributes to higher-quality products, customer satisfaction, and increased performance returns.

Furthermore, the study finds that GS positively moderates the effects of SCC and CA on FP. These subsidies stimulate cooperation enthusiasm, reduce financial pressures, and facilitate the translation of ideas into practice, leading to richer performance returns. However, GS does not directly assist in establishing CAs, which require the cooperative efforts of both parties and effective integration and utilization of technology and resources based on the resource-based theory.

5.2. Practical Implications

The theoretical findings from this study assist entrepreneurs in strengthening their cooperation with supply chain partners and guiding the development of SCC. A mutually beneficial landscape is cultivated by fostering the reciprocal exchange of information, technology, and resources [77,78]. This, in turn, promotes equitable incentive structures and collaborative decision-making processes, ultimately empowering both parties to refine and innovate their products. As a result, they can robustly compete against industry rivals while fostering improved profitability.

Furthermore, the study highlights the positive moderating influence of GS on the interplay between SCC, CA, and FP. These subsidies act as powerful catalysts, igniting cooperative zeal, alleviating financial constraints, and facilitating the transition from conceptual ideas to tangible implementations. However, it is essential to clarify that while GS effectively bolsters the collaborative landscape, it does not singlehandedly engineer the establishment of CAs. The study affirms that creating CAs depends on orchestrated joint efforts by both partners, guided by the effective integration and exploitation of technology and resources, as framed by the resource-based theory.

In summary, enterprises can apply the findings of this study by strategically orchestrating SCC initiatives, harnessing the inherent value of Collaborative Advantages (CAs), and judiciously leveraging GS. These actions can enhance collaborative dynamics, boost financial performance, and ultimately lead to sustainable competitive positioning and enduring growth in the complex and evolving business landscape.

6. Conclusions

This study highlights the significant role of SCC in shaping CA and FP. A parallel case study further underscores the importance of considering SCC as a fundamental component within green innovation strategies [79]. In the context of the sustainable environment, an increasing number of related case studies are emerging, providing valuable insights into the pivotal role of GS [80,81]. Indeed, the study sheds light on an important finding that GS has the potential to magnify the impact of SCC on FP through CA. This suggests that government support in the form of subsidies can act as a catalyst, further enhancing the positive outcomes of SCC and ultimately benefiting FP through the creation of a CA. As a result, the study highlights the strategic value of both SCC and GS in promoting overall business success.

To measure FP, we utilized financial performance as an indicator, and GS was used to gauge the level of support provided by the government. A conceptual model was then constructed to examine the relationships among these GS, SCC, CA and FP variables. The data collection process involves administering a questionnaire, followed by rigorous reliability and validity testing of the scale using EFA and CFA. Next, a structural equation model was constructed, and hypothesis relationships were verified. As a result, the paper recommended that enterprises should actively pursue collaborative relationships with supply chain partners and seek GS to enhance FP.

Policymakers can enhance the benefits of SCC through a comprehensive approach. They should facilitate cross-sector collaboration, forging connections between diverse industries to stimulate innovation and address global challenges [82]. Sustainability should be a top priority, with incentives and support for eco-friendly collaborations and promoting sustainable practices in supply chains [83,84]. Policymakers can promote collaborative networks where businesses exchange knowledge and best practices, incentivize sustainability through tax breaks and grants, offer training programs to build effective partnerships, and develop online platforms for streamlined access to support program information. Investing in training initiatives to bolster partnership-building skills and strategically allocate resources for innovative supply chain practices can boost competitiveness. Encouraging diverse supplier relationships and fostering public–private partnerships are vital for supply chain resilience.

Recognizing exemplary collaborations through awards can motivate excellence and nurture an innovative culture within supply chains. Moreover, fostering long-term planning for collaborations can amplify their impact on overall business success and economic growth. However, future studies should also consider the potential limitations of political factors, such as differing regulatory environments, trade policies, and geopolitical tensions, which could impact the feasibility and success of cross-sector collaboration and sustainability initiatives [85].

In summary, our study underscores the strategic importance of both Supply Chain Collaboration (SCC) as an internal resource and Government Subsidies (GS) as an external resource in driving overall business success. SCC enhances a firm's competitive edge, and when combined with GS, it positively impacts Firm Performance (FP). Motivated by Transaction Cost Economics and Social Exchange Theory, firms engage in collaborative supply chain practices to reduce transaction costs and gain benefits like knowledge sharing and risk mitigation. Dynamic Capabilities Theory highlights how SCC and GS serve as critical dynamic capabilities, enabling firms to adapt and thrive in a dynamic business environment. By effectively utilizing both internal and external resources, firms can navigate challenges and seize opportunities, ultimately propelling their long-term success.

While acknowledging the limitations posed by our research sample size and scope, this study highlights the pivotal role of government subsidies in establishing collaborative advantages and thus enhancing firm performance through supply chain collaboration. These findings gain heightened significance within a dynamically evolving business landscape characterized by trends such as digitalization and data sharing, predictive analytics, sustainability collaboration, resilience and risk management, e-commerce integration, circular economy initiatives, ethical and social responsibility, robotic process automation, supply chain visibility platforms, regulatory compliance, and the diversification of partnerships. To address these limitations and build upon our insights, future research should consider more extensive and diverse samples, delve deeper into the specific mechanisms underlying these collaborations, and explore innovative strategies for leveraging these trends to foster resilient and sustainable supply chains [78,86,87].

7. Limitations

The study acknowledges limitations for future research: firstly, it highlights the need for a larger sample size to explore questionnaire data more thoroughly and suggests employing robust data collection methods like content analysis for greater precision [88]. Secondly, it suggests broadening the scope of respondents beyond grassroots managers and employees to enhance result clarity. Furthermore, the study recommends considering factors beyond government subsidies, like trust and external influences, to create a more comprehensive research model. Additionally, exploring relationships based on enterprise size and years of operation could offer more profound insights. In summary, the research underscores the importance of nurturing collaborative supply chain relationships and utilizing government support for improved firm performance and competitiveness, opening intriguing avenues for further exploration by both researchers and practitioners.

Author Contributions: Conceptualization, Z.L. and Y.Z.; formal analysis, C.J.; methodology, Y.Z. and Z.L.; writing—original draft, Z.L.; software, Z.L. and C.J.; writing—review and editing, Y.Z.; visualization, J.W.; supervision, Y.Z.; project administration, Z.L. and Y.Z.; funding acquisition, Z.L. and Y.Z. All authors have read and agreed to the published version of the manuscript.

Funding: Financial support for this research was provided by the National Social Science Foundation of China through grant number 21BGL052.

Institutional Review Board Statement: The study was conducted in accordance with the Declaration of Helsinki, and approved by the Institutional Review Board of Henan University of Technology (protocol code 20222007066001, date of 23 August 2022).

Informed Consent Statement: Not applicable.

Data Availability Statement: Data are contained within the article.

Acknowledgments: We would like to express our sincere gratitude to the anonymous reviewers for their valuable and constructive comments, which significantly improved the quality of this article.

Conflicts of Interest: The authors declare no conflict of interest.

References

1. Abbas, J.; Rehman, S.; Aldereai, O.; Al-Sulaiti, K.I.; Shah, S.A.R. Tourism management in financial crisis and industry 4.0 effects: Managers traits for technology adoption in reshaping, and reinventing human management systems. *Hum. Syst. Manag.* **2023**, *42*, 1–18. [CrossRef]
2. Meng, Q.; Yan, Z.; Abbas, J.; Shankar, A.; Subramanian, M. Human–Computer Interaction and Digital Literacy Promote Educational Learning in Pre-school Children: Mediating Role of Psychological Resilience for Kids' Mental Well-Being and School Readiness. *Int. J. Hum.–Comput. Interact.* **2023**, *39*, 1–15. [CrossRef]
3. Abbas, J.; Al-Sulaiti, K.; Lorente, D.B.; Shah, S.A.R.; Shahzad, U. Reset the Industry Redux through Corporate Social Responsibility. In *Economic Growth and Environmental Quality in a Post-Pandemic World*; Routledge: London, UK, 2023; pp. 177–201.
4. Al-Sulaiti, K.; Al-Khulaifi, A.; AI-Khatib, F. Banking services and customer's satisfaction in qatar: A statistical analysis. *Stud. Bus. Econ.* **2005**, *11*, 130–154. [CrossRef]

5. Wang, S.; Abbas, J.; Al-Sulati, K.I.; Shah, S.A.R. The Impact of Economic Corridor and Tourism on Local Community's Quality of Life under One Belt One Road Context. *Eval. Rev.* **2023**, *47*, 445–454. [CrossRef]
6. Wen, H.; Zhong, Q.; Lee, C.-C. Digitalization, competition strategy and corporate innovation: Evidence from Chinese manufacturing listed companies. *Int. Rev. Financ. Anal.* **2022**, *82*, 102166. [CrossRef]
7. Chesbrough, H.; Heaton, S.; Mei, L. Open innovation with Chinese characteristics: A dynamic capabilities perspective. *R D Manag.* **2021**, *51*, 247–259. [CrossRef]
8. Ireland, R.D.; Hitt, M.A.; Vaidyanath, D. Alliance management as a source of competitive advantage. *J. Manag.* **2002**, *28*, 413–446. [CrossRef]
9. Soosay, C.A.; Hyland, P. A decade of supply chain collaboration and directions for future research. *Supply Chain. Manag. Int. J.* **2015**, *20*, 613–630. [CrossRef]
10. Sudusinghe, J.I.; Seuring, S. Supply chain collaboration and sustainability performance in circular economy: A systematic literature review. *Int. J. Prod. Econ.* **2022**, *245*, 108402. [CrossRef]
11. Min, S.; Roath, A.S.; Daugherty, P.J.; Genchev, S.E.; Chen, H.; Arndt, A.D.; Glenn Richey, R. Supply chain collaboration: What's happening? *Int. J. Logist. Manag.* **2005**, *16*, 237–256. [CrossRef]
12. Bogers, M.; Chesbrough, H.; Heaton, S.; Teece, D.J. Strategic Management of Open Innovation: A Dynamic Capabilities Perspective. *Calif. Manag. Rev.* **2019**, *62*, 77–94. [CrossRef]
13. Teece, D.J. Hand in Glove: Open Innovation and the Dynamic Capabilities Framework. *Strateg. Manag. Rev.* **2020**, *1*, 233–253. [CrossRef]
14. Al-Sulaiti, K.I.; Fontenot, R.J. Country of origin [COO] influence on foreign vs. domestic products: Consumers' perception and selection of airlines in the Arab Gulf Region. *Glob. Bus. Res.-Acad. Glob. Bus. Adv.* **2004**, *1*, 260–277.
15. Liu, Y.; Zhao, X.; Mao, F. The synergy degree measurement and transformation path of China's traditional manufacturing industry enabled by digital economy. *Math. Biosci. Eng.* **2022**, *19*, 5738–5753. [CrossRef] [PubMed]
16. Sambasivan, M.; Siew-Phaik, L.; Mohamed, Z.A.; Leong, Y.C. Factors influencing strategic alliance outcomes in a manufacturing supply chain: Role of alliance motives, interdependence, asset specificity and relational capital. *Int. J. Prod. Econ.* **2013**, *141*, 339–351. [CrossRef]
17. Ramanathan, U. Performance of supply chain collaboration–A simulation study. *Expert Syst. Appl.* **2014**, *41*, 210–220. [CrossRef]
18. Vereecke, A.; Muylle, S. Performance improvement through supply chain collaboration in Europe. *Int. J. Oper. Prod. Manag.* **2006**, *26*, 1176–1198. [CrossRef]
19. Ramanathan, U.; Gunasekaran, A.; Subramanian, N. Supply chain collaboration performance metrics: A conceptual framework. *Benchmarking Int. J.* **2011**, *18*, 856–872. [CrossRef]
20. Long, C.; Zhang, X. Patterns of China's industrialization: Concentration, specialization, and clustering. *China Econ. Rev.* **2012**, *23*, 593–612. [CrossRef]
21. Li, F.; Liu, W.; Bi, K. Exploring and visualizing spatial-temporal evolution of patent collaboration networks: A case of China's intelligent manufacturing equipment industry. *Technol. Soc.* **2021**, *64*, 101483. [CrossRef]
22. Lu, F. China–US trade disputes in 2018: An overview. *China World Econ.* **2018**, *26*, 83–103. [CrossRef]
23. Chen, X.; Tongurai, J. Informational linkage and price discovery between China's futures and spot markets: Evidence from the US–China trade dispute. *Glob. Financ. J.* **2023**, *55*, 100750. [CrossRef]
24. Zhang, G.; Yang, Y.; Yang, G. Smart supply chain management in Industry 4.0: The review, research agenda and strategies in North America. *Ann. Oper. Res.* **2022**, *322*, 1075–1117. [CrossRef] [PubMed]
25. Li, L. China's manufacturing locus in 2025 With a comparison of Made-in-China 2025 and Industry 4.0. *Technol. Forecast. Soc. Change* **2018**, *135*, 66–74. [CrossRef]
26. Byrne, B.M. Structural Equation Modeling With AMOS, EQS, and LISREL: Comparative Approaches to Testing for the Factorial Validity of a Measuring Instrument. *Int. J. Test.* **2001**, *1*, 55–86. [CrossRef]
27. Zhang, X.; Husnain, M.; Yang, H.; Ullah, S.; Abbas, J.; Zhang, R. Corporate Business Strategy and Tax Avoidance Culture: Moderating Role of Gender Diversity in an Emerging Economy. *Front. Psychol.* **2022**, *13*, 827553. [CrossRef]
28. Jobst, L.J.; Bader, M.; Moshagen, M. A tutorial on assessing statistical power and determining sample size for structural equation models. *Psychol. Methods* **2023**, *28*, 207–221. [CrossRef]
29. Thakkar, J.J. *Structural Equation Modelling Application for Research and Practice (with AMOS and R)*, 1st ed.; Springer: Singapore, 2020.
30. Majali, T.E.; Alkaraki, M.; Asad, M.; Aladwan, N.; Aledeinat, M. Green Transformational Leadership, Green Entrepreneurial Orientation and Performance of SMEs: The Mediating Role of Green Product Innovation. *J. Open Innov. Technol. Mark. Complex.* **2022**, *8*, 191. [CrossRef]
31. Raweewan, M.; Ferrell, W.G., Jr. Information sharing in supply chain collaboration. *Comput. Ind. Eng.* **2018**, *126*, 269–281. [CrossRef]
32. Ramanathan, U.; Gunasekaran, A. Supply chain collaboration: Impact of success in long-term partnerships. *Int. J. Prod. Econ.* **2014**, *147*, 252–259. [CrossRef]
33. Chen, J.; Pun, H.; Zhang, Q. Eliminate demand information disadvantage in a supplier encroachment supply chain with information acquisition. *Eur. J. Oper. Res.* **2023**, *305*, 659–673. [CrossRef]

34. Reim, W.; Andersson, E.; Eckerwall, K. Enabling collaboration on digital platforms: A study of digital twins. *Int. J. Prod. Res.* **2022**, *61*, 3926–3942. [CrossRef]
35. Liao, Y.; Li, Y. Complementarity effect of supply chain competencies on innovation capability. *Bus. Process Manag. J.* **2019**, *25*, 1251–1272. [CrossRef]
36. Simatupang, T.M.; Sridharan, R. Complementarities in supply chain collaboration. *Ind. Eng. Manag. Syst.* **2018**, *17*, 30–42. [CrossRef]
37. Dyer, J.H.; Singh, H. The relational view: Cooperative strategy and sources of interorganizational competitive advantage. *Acad. Manag. Rev.* **1998**, *23*, 660–679. [CrossRef]
38. Jap, S.D. Perspectives on joint competitive advantages in buyer–supplier relationships. *Int. J. Res. Mark.* **2001**, *18*, 19–35. [CrossRef]
39. Malhotra, A.; Majchrzak, A.; Carman, R.; Lott, V. Radical innovation without collocation: A case study at Boeing-Rocketdyne. *MIS Q.* **2001**, *25*, 229–249. [CrossRef]
40. Vangen, S.; Huxham, C. Enacting leadership for collaborative advantage: Dilemmas of ideology and pragmatism in the activities of partnership managers. *Br. J. Manag.* **2003**, *14*, S61–S76. [CrossRef]
41. Duffy, R.; Fearne, A. The impact of supply chain partnerships on supplier performance. *Int. J. Logist. Manag.* **2004**, *15*, 57–72. [CrossRef]
42. Bagchi, P.K.; Chun Ha, B.; Skjoett-Larsen, T.; Boege Soerensen, L. Supply chain integration: A European survey. *Int. J. Logist. Manag.* **2005**, *16*, 275–294. [CrossRef]
43. Holweg, M.; Disney, S.; Holmström, J.; Småros, J. Supply chain collaboration: Making sense of the strategy continuum. *Eur. Manag. J.* **2005**, *23*, 170–181. [CrossRef]
44. Tanriverdi, H. Performance effects of information technology synergies in multibusiness firms. *MIS Q.* **2006**, *30*, 57–77. [CrossRef]
45. Fynes, B.; Voss, C.; De Búrca, S. The impact of supply chain relationship quality on quality performance. *Int. J. Prod. Econ.* **2005**, *96*, 339–354. [CrossRef]
46. Kaufman, A.; Wood, C.H.; Theyel, G. Collaboration and technology linkages: A strategic supplier typology. *Strateg. Manag. J.* **2000**, *21*, 649–663. [CrossRef]
47. Neely, A. The performance measurement revolution: Why now and what next? *Int. J. Oper. Prod. Manag.* **1999**, *19*, 205–228. [CrossRef]
48. De Almeida, M.M.K.; Marins, F.A.S.; Salgado, A.M.P.; Santos, F.C.A.; Da Silva, S.L. Mitigation of the bullwhip effect considering trust and collaboration in supply chain management: A literature review. *Int. J. Adv. Manuf. Technol.* **2015**, *77*, 495–513. [CrossRef]
49. Al-Doori, J.A. The impact of supply chain collaboration on performance in automotive industry: Empirical evidence. *J. Ind. Eng. Manag.* **2019**, *12*, 241–253. [CrossRef]
50. Ma, K.; Thomassey, S.; Zeng, X. Development of a central order processing system for optimizing demand-driven textile supply chains: A real case based simulation study. *Ann. Oper. Res.* **2020**, *291*, 627–656. [CrossRef]
51. Panahifar, F.; Byrne, P.J.; Salam, M.A.; Heavey, C. Supply chain collaboration and firm's performance: The critical role of information sharing and trust. *J. Enterp. Inf. Manag.* **2018**, *31*, 358–379. [CrossRef]
52. Pradabwong, J.; Braziotis, C.; Tannock, J.D.; Pawar, K.S. Business process management and supply chain collaboration: Effects on performance and competitiveness. *Supply Chain. Manag. Int. J.* **2017**, *22*, 107–121. [CrossRef]
53. Cao, M.; Zhang, Q. Supply chain collaboration: Impact on collaborative advantage and firm performance. *J. Oper. Manag.* **2011**, *29*, 163–180. [CrossRef]
54. Asad, M.; Asif, M.U.; Bakar, L.J.A.; Altaf, N. Entrepreneurial Orientation, Big Data Analytics, and SMEs Performance under the Effects of Environmental Turbulence. In Proceedings of the 2021 International Conference on Data Analytics for Business and Industry (ICDABI), Sakheer, Bahrain, 25–26 October 2021; pp. 144–148.
55. Micah, A.E.; Bhangdia, K.; Cogswell, I.E.; Lasher, D.; Lidral-Porter, B.; Maddison, E.R.; Nguyen, T.N.N.; Patel, N.; Pedroza, P.; Solorio, J.; et al. Global investments in pandemic preparedness and COVID-19: Development assistance and domestic spending on health between 1990 and 2026. *Lancet Glob. Health* **2023**, *11*, e385–e413. [CrossRef] [PubMed]
56. Shah, S.A.R.; Zhang, Q.; Abbas, J.; Tang, H.; Al-Sulaiti, K.I. Waste management, quality of life and natural resources utilization matter for renewable electricity generation: The main and moderate role of environmental policy. *Util. Policy* **2023**, *82*, 101584. [CrossRef]
57. Kang, K.; Wang, M.; Luan, X. Decision-making and coordination with government subsidies and fairness concerns in the poverty alleviation supply chain. *Comput. Ind. Eng.* **2021**, *152*, 107058. [CrossRef]
58. Wang, J.; Hu, Y.; Qu, W.; Ma, L. Research on emergency supply chain collaboration based on tripartite evolutionary game. *Sustainability* **2022**, *14*, 11893. [CrossRef]
59. Yu, X.; Li, C.; Shi, Y.; Yu, M. Pharmaceutical supply chain in China: Current issues and implications for health system reform. *Health Policy* **2010**, *97*, 8–15. [CrossRef]
60. Xu, J.; Wang, X.; Liu, F. Government subsidies, R&D investment and innovation performance: Analysis from pharmaceutical sector in China. *Technol. Anal. Strateg. Manag.* **2021**, *33*, 535–553. [CrossRef]
61. Al-Sulaiti, K.I.; Abaalzamat, K.H.; Khawaldah, H.; Alzboun, N. Evaluation of Katara Cultural Village Events And Services: A Visitors' Perspective. *Event Manag.* **2021**, *25*, 653–664. [CrossRef]

62. Schmidt, C.A.; Cromwell, E.A.; Hill, E.; Donkers, K.M.; Schipp, M.F.; Johnson, K.B.; Pigott, D.M.; Hay, S.I. The prevalence of onchocerciasis in Africa and Yemen, 2000–2018: A geospatial analysis. *BMC Med.* **2022**, *20*, 293. [CrossRef]
63. Xu, R.; Shen, Y.; Liu, M.; Li, L.; Xia, X.; Luo, K. Can government subsidies improve innovation performance? Evidence from Chinese listed companies. *Econ. Model.* **2023**, *120*, 106151. [CrossRef]
64. Cao, M.; Zhang, Q. Supply chain collaborative advantage: A firm's perspective. *Int. J. Prod. Econ.* **2010**, *128*, 358–367. [CrossRef]
65. Baah, C.; Acquah, I.S.K.; Ofori, D. Exploring the influence of supply chain collaboration on supply chain visibility, stakeholder trust, environmental and financial performances: A partial least square approach. *Benchmarking Int. J.* **2022**, *29*, 172–193. [CrossRef]
66. Huang, Y. Government subsidies and corporate disclosure. *J. Account. Econ.* **2022**, *74*, 101480. [CrossRef]
67. Mitra, S.; Webster, S. Competition in remanufacturing and the effects of government subsidies. *Int. J. Prod. Econ.* **2008**, *111*, 287–298. [CrossRef]
68. Anderson, J.C.; Gerbing, D.W. Structural equation modeling in practice: A review and recommended two-step approach. *Psychol. Bull.* **1988**, *103*, 411–423. [CrossRef]
69. Shabbir, M.S.; Bait Ali Sulaiman, M.A.; Hasan Al-Kumaim, N.; Mahmood, A.; Abbas, M. Green Marketing Approaches and Their Impact on Consumer Behavior towards the Environment—A Study from the UAE. *Sustainability* **2020**, *12*, 8977. [CrossRef]
70. Bonett, D.G.; Wright, T.A. Cronbach's alpha reliability: Interval estimation, hypothesis testing, and sample size planning. *J. Organ. Behav.* **2015**, *36*, 3–15. [CrossRef]
71. Vaske, J.J.; Beaman, J.; Sponarski, C.C. Rethinking Internal Consistency in Cronbach's Alpha. *Leis. Sci.* **2016**, *39*, 163–173. [CrossRef]
72. Zahid, H.; Ali, S.; Danish, M.; Sulaiman, M.A.B.A. Factors Affecting Consumers Intentions to Purchase Dairy Products in Pakistan: A Cognitive Affective-Attitude Approach. *J. Int. Food Agribus. Mark.* **2022**, *34*, 1–26. [CrossRef]
73. Fornell, C.; Larcker, D.F. Evaluating structural equation models with unobservable variables and measurement error. *J. Mark. Res.* **1981**, *18*, 39–50. [CrossRef]
74. Erceg-Hurn, D.M.; Mirosevich, V.M. Modern robust statistical methods: An easy way to maximize the accuracy and power of your research. *Am. Psychol.* **2008**, *63*, 591–601. [CrossRef] [PubMed]
75. Ma, H.-L.; Wang, Z.X.; Chan, F.T.S. How important are supply chain collaborative factors in supply chain finance? A view of financial service providers in China. *Int. J. Prod. Econ.* **2020**, *219*, 341–346. [CrossRef]
76. Duong, L.N.K.; Chong, J. Supply chain collaboration in the presence of disruptions: A literature review. *Int. J. Prod. Res.* **2020**, *58*, 3488–3507. [CrossRef]
77. Baah, C.; Opoku Agyeman, D.; Acquah, I.S.K.; Agyabeng-Mensah, Y.; Afum, E.; Issau, K.; Ofori, D.; Faibil, D. Effect of information sharing in supply chains: Understanding the roles of supply chain visibility, agility, collaboration on supply chain performance. *Benchmarking Int. J.* **2022**, *29*, 434–455. [CrossRef]
78. Nayal, K.; Raut, R.D.; Yadav, V.S.; Priyadarshinee, P.; Narkhede, B.E. The impact of sustainable development strategy on sustainable supply chain firm performance in the digital transformation era. *Bus. Strategy Environ.* **2022**, *31*, 845–859. [CrossRef]
79. Yang, Z.; Lin, Y. The effects of supply chain collaboration on green innovation performance:An interpretive structural modeling analysis. *Sustain. Prod. Consum.* **2020**, *23*, 1–10. [CrossRef]
80. Kılıç, U.; Kekezoğlu, B. A review of solar photovoltaic incentives and Policy: Selected countries and Turkey. *Ain Shams Eng. J.* **2022**, *13*, 101669. [CrossRef]
81. Wenqi, D.; Khurshid, A.; Rauf, A.; Calin, A.C. Government subsidies' influence on corporate social responsibility of private firms in a competitive environment. *J. Innov. Knowl.* **2022**, *7*, 100189. [CrossRef]
82. Luthra, S.; Sharma, M.; Kumar, A.; Joshi, S.; Collins, E.; Mangla, S. Overcoming barriers to cross-sector collaboration in circular supply chain management: A multi-method approach. *Transp. Res. Part E Logist. Transp. Rev.* **2022**, *157*, 102582. [CrossRef]
83. Mishra, R.; Singh, R.K.; Rana, N.P. Developing environmental collaboration among supply chain partners for sustainable consumption & production: Insights from an auto sector supply chain. *J. Clean. Prod.* **2022**, *338*, 130619. [CrossRef]
84. De Lima, F.A.; Seuring, S. A Delphi study examining risk and uncertainty management in circular supply chains. *Int. J. Prod. Econ.* **2023**, *258*, 108810. [CrossRef]
85. Fernández-Miguel, A.; Riccardi, M.P.; Veglio, V.; García-Muiña, F.E.; Fernández del Hoyo, A.P.; Settembre-Blundo, D. Disruption in Resource-Intensive Supply Chains: Reshoring and Nearshoring as Strategies to Enable Them to Become More Resilient and Sustainable. *Sustainability* **2022**, *14*, 10909. [CrossRef]
86. Fu, Q.; Abdul Rahman, A.A.; Jiang, H.; Abbas, J.; Comite, U. Sustainable Supply Chain and Business Performance: The Impact of Strategy, Network Design, Information Systems, and Organizational Structure. *Sustainability* **2022**, *14*, 1080. [CrossRef]
87. Chauhan, C.; Kaur, P.; Arrawatia, R.; Ractham, P.; Dhir, A. Supply chain collaboration and sustainable development goals (SDGs). Teamwork makes achieving SDGs dream work. *J. Bus. Res.* **2022**, *147*, 290–307. [CrossRef]
88. Abaalzamat, K.H.; Al-Sulaiti, K.I.; Alzboun, N.M.; Khawaldah, H.A. The Role of Katara Cultural Village in Enhancing and Marketing the Image of Qatar: Evidence From TripAdvisor. *SAGE Open* **2021**, *11*, 1–9. [CrossRef]

Disclaimer/Publisher's Note: The statements, opinions and data contained in all publications are solely those of the individual author(s) and contributor(s) and not of MDPI and/or the editor(s). MDPI and/or the editor(s) disclaim responsibility for any injury to people or property resulting from any ideas, methods, instructions or products referred to in the content.