sustainability

MDPI

Review

Impact of Fixed/Variable Speed Hydro, Wind, and Photovoltaic on Sub-Synchronous Torsional Oscillation—A Review

Vijay Mohale [1,*] and Thanga Raj Chelliah [2]

[1] Power Electronics and Hydro-Electric Machines Laboratory, Indian Institute of Technology Roorkee, Roorkee 247667, India
[2] Hydro Simulation Laboratory WRDM Dept., Indian Institute of Technology Roorkee, Roorkee 247667, India
* Correspondence: vp_mohale@wr.iitr.ac.in

Abstract: Series compensation is a cost-efficient way to enhance the system reliability and the power transfer capabilities of long transmission lines. As a result of series compensation, the sub-synchronous oscillation (SSO) causes a severe risk of torsional interactions (TI). Therefore, SSO becomes a serious risk factor in grid-integrated renewable energy systems. Numerous researchers have evaluated SSO instances in several types of asynchronous generators in power systems. In this paper, the categorization and the overview of the SSO phenomena have been vital for the different mechanisms, sophisticated systems, analytical techniques, and multiple reviews that have been propagated. This study provides SSO analysis for various types of renewable energy power plants. Finally, while dealing with conventional and new power systems, this study summarizes recent SSO-damping and alleviation techniques for practical perception and future perspectives.

Keywords: asynchronous generator; converters; renewable energy sources; series compensation; sub-synchronous oscillations

check for updates

Citation: Mohale, V.; Chelliah, T.R. Impact of Fixed/Variable Speed Hydro, Wind, and Photovoltaic on Sub-Synchronous Torsional Oscillation—A Review. *Sustainability* **2023**, *15*, 113. https://doi.org/10.3390/su15010113

Academic Editor: Shuhua Fang

Received: 16 November 2022
Revised: 9 December 2022
Accepted: 15 December 2022
Published: 21 December 2022

Copyright: © 2022 by the authors. Licensee MDPI, Basel, Switzerland. This article is an open access article distributed under the terms and conditions of the Creative Commons Attribution (CC BY) license (https://creativecommons.org/licenses/by/4.0/).

1. Introduction

Growth in the industrial sector promises an abrupt rise in future energy demand. To meet this energy demand, renewable energy resources (RER) are the most promising technology, due to their clean, reliable, and emission-free nature. The vast deployment of RER (above 20%) into the existing power system network requires short- and long-term energy storage capacities to maintain grid stability.

The reduction in fossil fuels shifts its energy resources to renewable sources [1]. Hence, power electronic devices play a crucial role in this kind of power system. While power electronic technology has several advantages over power supply control, it also has disadvantages, such as low inertia, and it is vulnerable to grid hindrances, which give stability issues to the power system. Additionally, one of the most concerning issues here is multi-frequency oscillation (MFO), which covers multiple frequency segments, including wind turbines' sub-synchronous oscillation (SSO), and shafting torsional oscillation (STO) [2]. Here, SSO occurs between the generator and the external network that contains series-compensated transmission lines or high-voltage DC. One of the most common formations of SSO is a constant oscillation of generator torque, and it is undamped [3]. Furthermore, SSO is divided into three forms, which are sub-synchronous control interaction (SSCI), sub-synchronous resonance (SSR), and finally sub-synchronous torsional interaction (SSTI). Additionally, SSO is seen as a phenomenon in which two or more power systems, such as HVDC controllers, generator turbines, power electronic controllers, and series capacitors, change at the same time [4]. The major reasons for SSO might be induction generator effect (IGE), torsional interactions (TI), and torque amplification (TA). Moreover, the series compensation network is usually connected to wind systems to improve the power transfer feature of an existing AC transmission network. However, when torsional interactions

are considered, the series compensation resonance has a frequency greater than 47 Hz. However, the resonance frequency of a series compensation network cannot be above 47 Hz. In addition, the SSO produced by the torsional interaction in WTG is hard to consider [5]. Therefore, it is urgent to identify and monitor the SSO in its mitigated operation and design [6,7]. As per the IEEE Task force, real word SSO events are stated in Table 1.

The contributions and objectives of this paper are as follows:

1. This paper provides a comprehensive review on sub-synchronous oscillation (SSO) in wind, hydro (fixed and variable speed), and solar power plants;
2. The SSO occurrence and analysis method are explained in detail;
3. Summarizes the comparative analysis for impacts of series compensation on SSO;
4. Furthermore, state-of-the-art SSO reduction methods are discussed with their benefits and drawbacks.

Table 1. Real World SSO Events.

Year	Country/City	Frequency Components	Machines	Transmission Line
2017	China	37 Hz	Type 3 Wind Power Plant (WPP)	220 kV
2017	California	7 Hz	Solar Farm	-
2019	Australia	7 Hz	Variable Speed	-
2018	Toronto	5 Hz	Type-4 WPP	230 kV
2020	Australia	19 Hz	Variable Speed	-
2021	USA	22 Hz	Solar Farm	138 kV

In the analysis, research publications from 1975 to 2021 were searched for and used. This work incorporates primarily scientific published literature; non-science articles are not examined. The literature search was based on each component and considered relevant facts, and then found the relevant articles and summarized them individually.

Figure 1 shows the number of research publications that have been published and selected for analysis. The articles were evaluated and analyzed from 1975 to 2021. Here, 1975 to 1985 published papers were taken to provide details about the history of sub-synchronous oscillation.



Figure 1. Year-wise selection.

Figure 2 shows that the graphical chart is based on searching literature from online databases, including Google Scholar, Science Direct, IEEE Xplore, Springer, ResearchGate, Wiley, MDPI, and etc. For this research, 190 papers were reviewed.

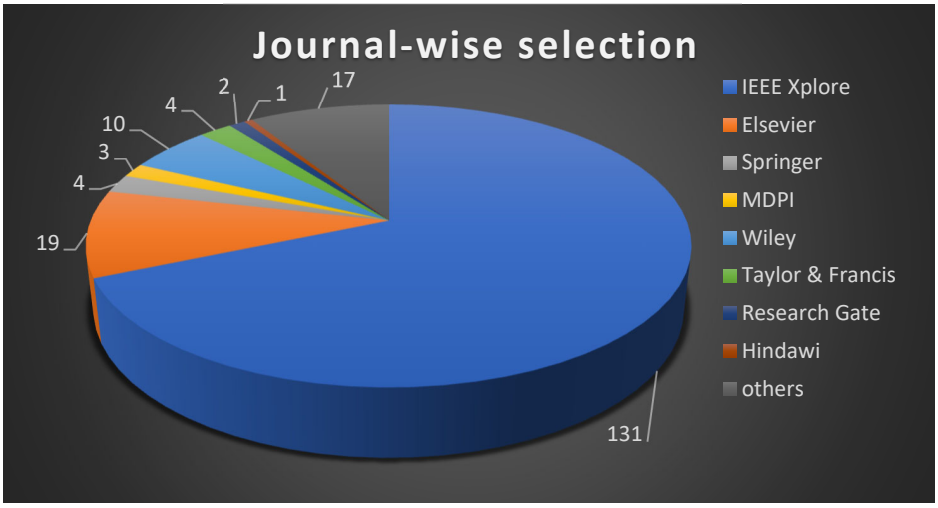

Figure 2. Journal-wise selection.

Since this paper primarily focuses on the impact of fixed/variable speed hydro, wind, and photovoltaic on sub-synchronous torsional oscillation, it is essential to have the following insights: classification of sub-synchronous oscillations (Section 1), effects of SSO in various renewable energy systems (Section 2), a detailed state-of-the-art study on variable speed generation (Section 3), numerous SSO events that have occurred around the world (Section 4), the detailed analysis and damping methods of SSO (Section 5 and 6, respectively), comparative study for impact of series compensation over SSO (Section 7), development in Pumped Storage Power Plant (PSPP) (Section 8), the open challenges of SSO mitigation methods and future scope of research work (Section 9), and finally the conclusion in (Section 10).

2. Classification of Sub-Synchronous Oscillation

As per the IEEE Power System Dynamic Working Group definitions, SSO can be divided into SSR and device-dependent. The SSR, on the other hand, is divided into three categories: induction generator effect, torsional interaction, and torque amplification. This categorization is inadequate for increasingly complicated and growing SSO concerns in a power system with huge WTGs, since it was originally developed for sub-synchronous stability difficulties connected to traditional turbo generators [8,9]. Figure 3 depicts the classification of sub-synchronous oscillations.

2.1. Effects of SSO in Different Renewable Energy Systems

2.1.1. SSO in Wind System

Figure 4 shows SSO in different power systems. With the immense development of wind systems, numerous wind turbines have been integrated with power electronic devices that cause degradation in the stability of system frequency. Meanwhile, a virtual synchronous generator creates inertia and damping. As a result, an adaptive SSO damping control approach is developed [10]. Initially, a small-signal model, as well as a model of state space for the permanent magnet synchronous generator (PMSG), are constructed. Here, the damping controller for the SSO is established by utilizing the linear matrix inequality based on a hybrid H2/H∞ control approach to resolve the state feedback matrix of each vertex. Similarly, the probability distribution function (PDF) and small-signal model of the direct-drive PMSG are analyzed to predict the possibility of SSO through the least-squares method polynomial fitting [11]. On the other hand, quantitative stability analysis (QSA) and impedance network modelling approaches were employed to analyze the SSO in the wind power system [12]. The occurrence of SSO in various generators with its mitigation method has been summarized in Table 2.

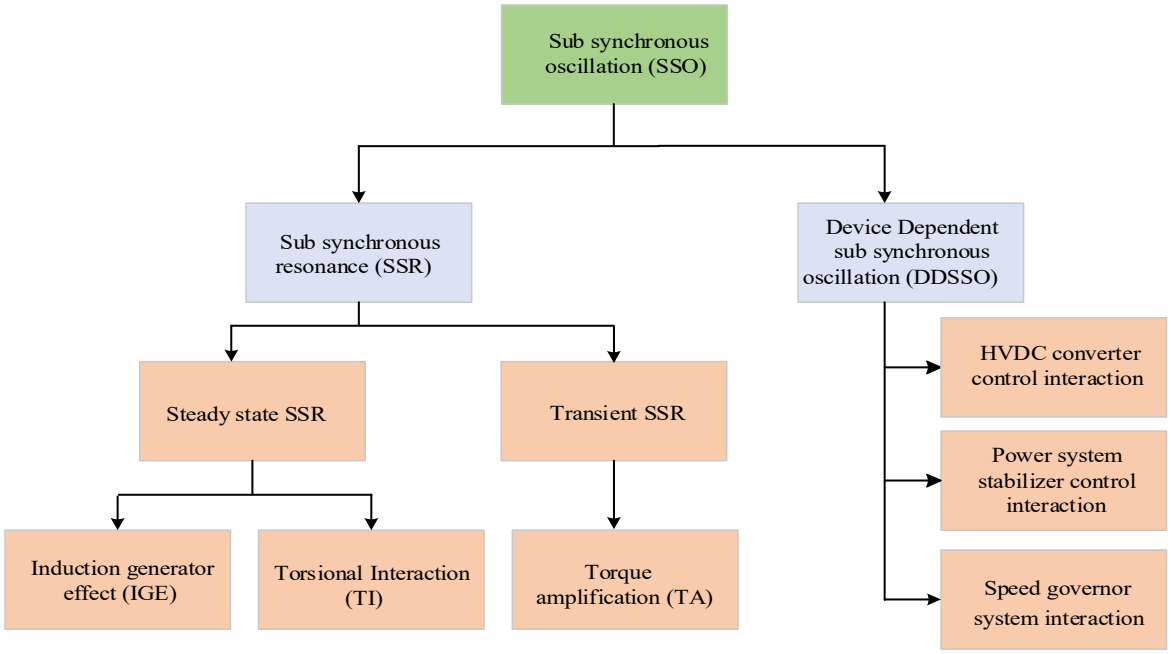

Figure 3. Classification of sub-synchronous oscillation.

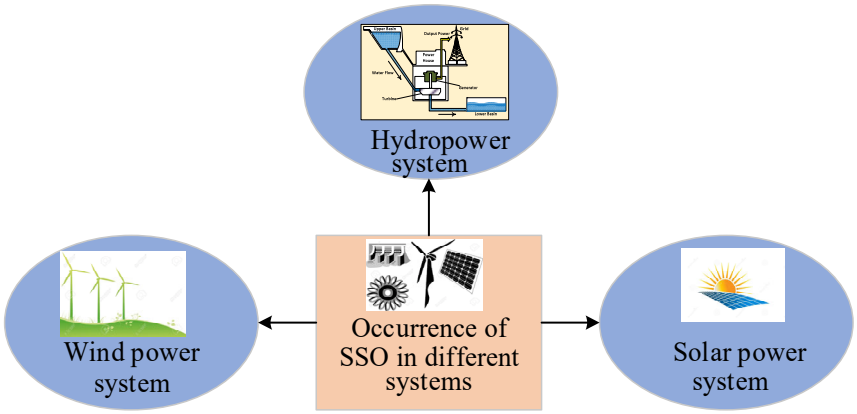

Figure 4. SSO in different power systems.

Table 2. Occurrence of SSO in various generators used in wind farms.

Author	Year	Type of Generator	Mitigation Method
Jun Deng et al. [10]	2020	Permanent magnet synchronous generator (PMSG) and virtual synchronous generator	Hybrid H2/H∞ control method
Shun Tao et al. [11]	2019	Direct-drive permanent magnet synchronous generator (D-PMSG)	SSO probability assessment method with the least-squares method of polynomial fitting
Huakun Liu et al. [12]	2018	Doubly fed induction generator (DFIG)	Stability analysis
Meng Wu et al. [6]	2015	DFIG	DFIG converter controller dynamics
Xinshou Tian et al. [13]	2019	Static Var generator and DFIG	Optimized control parameter
Bingbing Shao et al. [14]	2020	D-PMSG	Back-to-back converter model and system small-signal model

Table 2. *Cont.*

Author	Year	Type of Generator	Mitigation Method
Wenjuan Du et al. [15]	2020	D-PMSG	Open-loop modal proximity and NESMOR analysis
Tong Wang et al. [16]	2020	DFIG	Mixed H2/H∞ control with regional pole placemen
Yanhui Xu et al. [17]	2019	PMSG	Generalized Nyquist criterion
Y. Han et al. [18]	2022	PMSG	Eigenvalue analysis, based on the small-signal state-space model
Yanhui Xu et al. [19]	2018	PMSG	Small-signal analysis method
Xiaorong Xie et al. [20]	2019	PMSG	MW-level HPE and supplementary sub-synchronous damping control
D. H. R. Suriyaarachchi et al. [21]	2012	Type 3 wind turbine-generators	Frequency scan and small-signal analysis
Gangui Yan et al. [22]	2021	D-PMSG	Impedance model
Li Yunhong et al. [23]	2015	DFIG	Time-domain simulation and eigenvalue analysis
Wenjuan Du et al. [24]	2019	DFIG and PMSG	Positive net damping analysis, impedance model-based analysis, and open-loop modal resonance analysis
Babak Badrzadeh et al. [25]	2012	Type 3 turbines	Time-domain PSCAD/EMTDC simulation case studies
Rajeev Kumar et al. [26]	2021	Type-2 WPP	Whale optimization algorithm
Hossein Ali Mohammadpour et al. [27]	2015	Fixed speed wind turbine generator systems	Thyristor-controlled series capacitor and gate-controlled series capacitor
Yuzhi Wang et al. [28]	2020	PMSG	Eigenvalue analysis

2.1.2. SSO in Solar System

The photovoltaic system (PV) is connected to the grid via an extensive transmission line. Even if the PV system is affected by the SSO, the AC system's strength can deteriorate. So, modified IEEE first-benchmark time-domain simulations [29] are used to study sub-synchronous torsional interactions in a PV system. Here, the PV generator is connected to the same bus as the synchronous generator. Likewise, sequence impedance model analysis is performed on the PV system to analyze the impacts of SSO [30].

Similarly, a damping controller is employed based on the Wide Area Measurement System (WAMS), which is integrated with the primary control loop of a PV system to mitigate the SSR [31]. Furthermore, teaching–learning-based optimization (TLBO) algorithm is utilized to control the optimization issues. The occurrence of SSO in solar systems is shown in Table 3.

Table 3. Occurrence of SSO in various machines used in solar systems.

Author	Year	Type of Machine	Method
Rasel Mahmud et al. [29]	2020	Synchronous generator	Aggregated PV method
Shuqiang Zhao et al. [30]	2019	-	Impedance-based analysis method
M. Khayyatzadeh et al. [31]	2017	PV generator	Conventional damping controller based on WAMS and TLBO algorithm
Lin Yang et al. [32]	2017	Synchronous generator	System small-signal model, eigenvalue analysis and participation factor
Ming Yi et al. [33]	2020	-	Small-signal model
Rajiv K et al. [34]	2017	Synchronous generator	STATCOM

2.1.3. SSO in Fixed Speed Hydro System

To mitigate the sub-synchronous resonance in hydropower systems, a time-domain simulation model is constructed to analyze the small-signal and transient torsional mode stability [35]. Here, the presented approach is formulated as per the first IEEE benchmark model. Similarly, the sub-synchronous torsional interaction (SSTI) in hydro-TG units connected HVDC systems is investigated by varying the inertia ratio of the generator and turbine [36]. The occurrence of SSO in hydro systems is shown in Table 4.

Table 4. Occurrence of SSO in various generator used in Hydro plants.

Author	Year	Type of Generator	Method
Johan Bladh et al. [35]	2013	Hydropower generator	Time-domain simulations
Yin Chin Choo et al. [36]	2008	Hydro-turbine-generator (TG) unit	Sub-synchronous damping controller
Yin Chin Choo et al. [37]	2013	Hydro-TG units	Sensitivity analysis

3. SSO in Variable Speed Generators

The motion-induction amplification (MIA) in the doubly fed induction generators (DFIGs) is mitigated through a motion-induction compensation (MIC) control scheme [38]. This scheme allows the type-III DFIG to function as a type-IV generator in dynamics. Likewise, the impact of SSO on the DFIG-connected wind farms is analyzed using a time-domain analysis scheme [39]. In the same way, a multi-machine equivalent aggregation-based equivalent model is set up to look at the new types of SSO problems [40]. Here, small-signal analysis and refined frequency scanning were utilized to analyze the features of SSO. The comparison of the various methods used in variable speed generators is tabulated in Table 5.

Table 5. Occurrence of SSO in variable speed generators.

Author	Year	Type of Generator	Method
Yunjie Gu et al. [38]	2019	Doubly Fed Induction Generators (DFIG)	Motion-induction compensation
Chao Gao et al. [39]	2017	DFIG	Time-domain analysis
Liang Yuan et al. [40]	2020	DFIG	Small-signal analysis
Fan Yang et al. [41]	2017	DFIG	System state matrix and eigenvalue analysis
Yanhui Xu et al. [42]	2019	DFIG	Active disturbance rejection control
Andres E. Leon et al. [43]	2014	DFIG	Damping control
Sherif Omar Faried et al. [44]	2012	DFIG	Supplemental control and time-domain simulation analysis
Ulas Karaagac et al. [45]	2014	DFIG	Supplemental control
Jing Li et al. [46]	2016	DFIG	EVA Method
Bin Zhao et al. [47]	2015	DFIG	Auxiliary damping control strategy
X.Y. Bian et al. [48]	2018	DFIG	Power system stabilizer and probabilistic sensitivity indices
Javad Taherahmad et al. [49]	2017	DFIG	Adaptive control and supplementary control loop
M. Ghafouri et al. [50]	2017	DFIG	Linear-quadratic regulator
Junjie Ma et al. [51]	2019	DFIG	Impedance model
Wenjuan Du et al. [52]	2017	DFIG	-
F. Bizzarri et al. [53]	2018	Induction machines	Stability analysis
Liang Wang et al. [54]	2015	Induction generator	Sub-synchronous damper

Table 5. *Cont.*

Author	Year	Type of Generator	Method
Penghan Li et al. [55]	2021	DFIG	Fractional order sliding mode controller
Xi Wu et al. [56]	2018	DFIG	Sub-synchronous damping controller
Liang Wang et al. [57]	2017	DFIG	Direct stator-power controller
Wenjuan Du et al. [58]	2017	Variable-speed wind generators (VSWGs)	Open-loop modal analysis
Yanhui Xu et al. [59]	2019	DFIG	STATCOM

4. Major Events of SSO in Worldwide

Numerous SSO events have occurred in many countries, as shown in Table 6, containing various events of sub-synchronous oscillation worldwide and their findings.

Table 6. Occurrence of sub-synchronous oscillation worldwide.

Author	Year	Occurrence Year	Occurred Region	Country	Findings
D.N. Walker et al. [60]	1975	1970	Mohave generating station	USA	A sub-synchronous-based resonance test was executed. At different loads, simulations were run to look at the mode shapes, natural torsional frequencies, and damping for each torsional mode.
R.G. Farmer et al. [61]	1977	1975	Arizona–Nevada–Southern California EHV transmission system (Navajo project)	USA	Filters were being utilized for the natural modes. On the other hand, a frequency scanning program was implemented for torsional interaction analysis.
Xiaorong Xie et al. [62]	2011	2011	Shangdu power plant	China	To mitigate the SSR, supplementary excitation damping control and torsional stress relay were utilized.
John Adams et al. [63]	2012	2009	ERCOT system	USA	The screening approach utilized the electromagnetic modelling level analysis for the SSR.
M. Bahrman et al. [64]	1980	1977	Square butte	US	A transfer function was utilized to reduce the TI between the generator and the turbine.
D.C. Lee et al. [65]	1985	1985	Ontario hydro unit	Ontario, Canada	Valve linearization circuits and the filtering of shaft torsional components in the speed signal were utilized.
Liang Wang et al. [66]	2015	2012	Wind farm	North China	Eigenvalue analysis and the time-domain simulation with the equal circuit were employed to examine the consequences of the SSR features.
Dewu Shu et al. [67]	2017	-	China southern grid	South China	EMT simulations and IM-based method were implemented.
Y.-H. Wan [68]	2013	2011	Oklahoma Gas and Electric Company	US	Spectrum-based analysis method was executed.
Meng Wu et al. [69]	2014	2013	Jibei power grid	China	Eigenvalue adjustment-based sensitivity analysis and parameter tuning are carried out.

Table 6. *Cont.*

Author	Year	Occurrence Year	Occurred Region	Country	Findings
Xiangning Xiao et al. [70]	2016	-	Hulunbuir power plant	China	To reduce the FOSSO (frequently over-threshold SSO), an SSO dynamic suppressor was implemented.
Doan Duc Tung et al. [71]	2019	2015	Vietnamese Vungang thermal plant	Vietnam	To reduce the SSR, FACTS devices were considered.
Huakun Liu et al. [72]	2017	2015	Xinjiang Uygur Autonomous Region	China	Time-domain simulation, small-signal Eigen analysis, and impedance of model analysis were accomplished.
Xiaorong Xie et al. [73]	2017	2012	Power station in Hebei	China	IM-based feature analysis was considered.

5. SSO Analysis Methods

The occurrence of sub-synchronous oscillations can be analyzed using eigenvalues, complex torque coefficients, the frequency scanning method, impedance network modelling, open-loop modal analysis, and unit interaction factor analysis. Figure 5 shows the analysis methods of SSO.

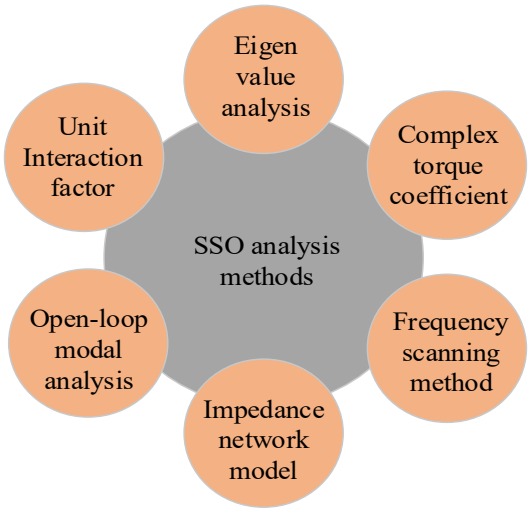

Figure 5. Analysis methods of SSO.

5.1. Eigenvalue Analysis

The linearized equations are formulated for each device in the system to analyze the effects of the SSR in generation systems and power electronic devices [74]. Likewise, by utilizing the eigenvalue analysis approach, the SSO of the HVDC system is analyzed [75]. Moreover, a small-signal linearized model is formulated to examine the SSO characteristics with and without involving the SSDC. Similarly, by conducting eigenvalue analysis, transfer function, electromagnetic transient simulation, and the impact of SSO in the D-PMSG-integrated wind system are analyzed [76]. On the other hand, the coefficient of torsional mechanical damping is taken by performing eigenvalue analysis on parallel-linked turbine generators to analyze the SSO among turbine generators and grid [77]. Additionally, characteristics of anti-phase mode and in-phase mode are taken.

The state matrix A is created by linearizing the DFIM mathematical model. The system is analyzed by extracting its eigenvalues from the state matrix as follows:

$$|A - \lambda I| = 0 \quad (1)$$

Each oscillatory mode is represented by a complex eigenvalue. The nth oscillatory is shown by λ_n, where $\lambda_n = \sigma_n \pm j\omega_n$. The nth mode's damping ratio is calculated by

$$\zeta_n = \frac{-\sigma_n}{\sqrt{\sigma_n^2 + \omega_n^2}} \quad (2)$$

where the ζ_n is damping coefficients, σ_n is amplitude, and ω_n is SSO frequency components.

5.2. Complex Torque Coefficient Method

Using the complex torque coefficient and perturbation analysis, a multi-input and a multi-output linear model is built to study the SSO in multi-machine power systems [78].

5.3. Frequency Scanning Method

This method determines the SSO frequency using the frequency vs. impedance graph. The SSR in power systems is analyzed by discovering the damping level of the system through the frequency scanning approach [79].

5.4. Impedance Network Model

The following shown in Figure 6 is the impedance model of doubly-fed induction machine (DFIM) connected to grid for SSO Study.

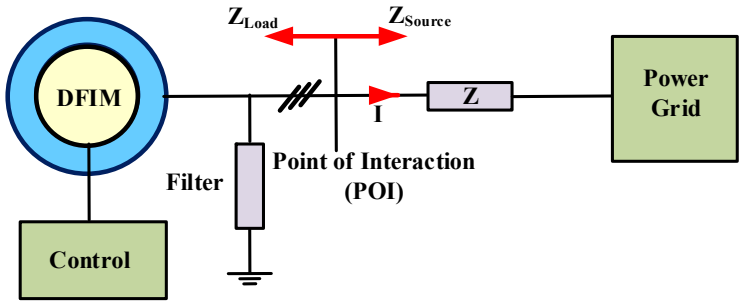

Figure 6. Impedance network model for SSO Study.

The sequence-domain frequency-coupled impedance model (FCIM) looks at the SSO that can happen between weak AC grids and direct-drive wind turbines [80]. Initially, a fast identification approach for the FCIM is developed to measure the FCIM's impedance-frequency curves. Similarly, based on the domain different impedance model, approaches were presented, such as sequence-domain impedance, polar coordinates impedance, and dq-domain impedance for maintaining the reliability of the voltage-sourced converters (VSC)-integrated grid by analyzing the SSO [81].

5.5. Open-Loop Modal Analysis

The SSO in grid-interlinked wind turbine generators is examined by employing the open-loop modal analysis for single-input, single-output and multi-input, and multi-output closed-loop models [82].

5.6. Unit Interaction Factor

The unit interaction factor (UIF) analysis approach is utilized to alleviate the SSO in the huge turbine-generated integrated thermal generation unit by measuring the operating condition [83]. The comparison based on control parameter and analysis methods is tabulated in Table 7.

Table 7. Comparison for SSO analysis approaches.

Author	Year	Analysis Method	Findings
Dong-Joon Kim et al. [74]	2007	Eigenvalue analysis (EVA)	State matrix of multi-machine power systems was constructed to analyze the SSR.
Dan Zhang et al. [75]	2012	EVA	HVDC system's linearized model was formulated to analyze the SSO with and without the use of SSDC.
Gao Feng et al. [76]	2016	EVA	D-PMSG wind system's electromagnetic transient model was formulated for examining the SSO.
Peng Zhang et al. [77]	2014	EVA	Coefficient of torsional mechanical damping for the parallel-coupled generator was obtained to analyze the SSO.
Biyue Huang et al. [84]	2019	EVA	SSO in between D-PMSG and grid was analyzed.
Chengbing He et al. [85]	2019	EVA	SSR in 70% series-compensated system was analyzed.
Sujit Purushothaman et al. [86]	2010	EVA	Linearized model for shaft system was constructed to obtain the occurrence of SSR.
Kun Xu et al. [78]	2011	Complex torque coefficient (CTC)	SSO in multiple generator system was analyzed by constructing equivalent model of the system.
Shiwu Xiao et al. [87]	2013	CTC	SSO influencing parameters of the Suizhong system was analyzed.
Benfeng Gao et al. [88]	2014	CTC	Electrical damping characteristics was analyzed.
Wei Li et al. [89]	2017	CTC	AC/DC grid sub-synchronous damping characteristics were examined.
Ahmadreza Tabesh et al. [90]	2005	CTC and frequency response approach	Torsional interaction among turbine generator units was examined.
Hanhua Zhang et al. [91]	2019	CTC	HVDC caused SSO was analyzed by constructing the mathematical computation model.
Xinyao Zhu et al. [92]	2014	CTC	In frequency domain, the contact between terminal current and voltage was analyzed for SSR analysis.
Yijun Wang et al. [93]	2019	CTC	Series-compensated DFIG incorporated transmission system's small-signal model was constructed to analyze the SSO.
Nicklas Johansson et al. [79]	2010	Frequency scanning approach (FSA)	Damping level of the system was obtained.
Malsha et al. [94]	2015	FSA	By the radiality factor, the torsional interaction was analyzed.
Wei Ren et al. [95]	2015	FSA	Sub-synchronous control interaction was analyzed.
John Adams et al. [96]	2012	FSA	Sub-synchronous control interaction (SSCI) was analyzed.
Yunzhi Cheng et al. [97]	2019	Series capacitor-based FSA	Generator effect (IGE) was analyzed.
M. Sahni et al. [98]	2012	FSA based on the current injection approach	SSTI and SSCI were examined.
Hwanhee Cho et al. [99]	2018	FSA-based time series analysis and nonlinear dynamic originated approaches	SSO in wind system were analyzed.
Tuomas Rauhala et al. [100]	2015	FSA and CTC	Estimated the sub-synchronous torsional frequencies.
Tuomas Rauhala et al. [101]	2010	FSA and LCC converter	Sub-synchronous damping oscillation were analyzed at different frequencies.

Table 7. *Cont.*

Author	Year	Analysis Method	Findings
Wei Liu et al. [80]	2019	Frequency-coupled impedance model (FCIM)	Sub-synchronous oscillation was analyzed between weak AC grids and direct-drive wind turbines.
Liang Yuan et al. [81]	2019	Sequence-domain impedance, polar coordinates impedance, and dq-domain impedance	Analyzed the SSO.
Saijun Yuan et al. [102]	2019	Harmonic linearization concept-based impedance network model (INM)	Sub-synchronous oscillation of grid-integrated D-PMSG was examined.
Dengke Qiao et al. [103]	2019	INM	SSO in offshore wind system-integrated VSC-HVDC was analyzed and electromagnetic transient model of the system was constructed.
Huakun Liu et al. [104]	2017	INM	SSR in wind farm was analyzed.
Ram Nath et al. [105]	2012	Time-domain simulation and frequency-domain impedance scanning	SSCI in DFIG-integrated wind system was analyzed.
Xu Zhang et al. [106]	2019	INM	Sub-synchronous damping calculator (SSDC) and the subharmonic voltage source converter (SVSC) were developed to analyze the SSO.
Shun Tao et al. [11]	2019	INM	SSO in D-PMSG-integrated wind system was analyzed.
Wenjuan Du et al. [82]	2019	Open-loop modal analysis	SSO in grid interlinked wind turbine generators was examined.
Wenjuan Du et al. [107]	2019	Open-loop sub system with respect to the near strong open-loop modal resonance (NSOMR).	SSO in grid interlinked PMSG system was analyzed.
Wenjuan Du et al. [108]	2018	Open-loop modal coupling approach	Analyzed the frequency drift of sub-synchronous oscillation in DFIG-integrated wind system.
Wenjuan Du et al. [109]	2017	Open-loop modal analysis	Sub-synchronous interactions in AC grid connected multi-terminal DC (MTDC) network was analyzed.
Wenjuan Du et al. [110]	2018	Open-loop modal analysis	Phase-locked loop-caused sub-synchronous interactions (SSIs) in grid coupled PMSG was examined.
Z. Li et al. [111]	2010	Unit interaction factor (UIF) analysis approach	SSO in seven node hybrid AC-DC system with distinct working modes was analyzed.
Yang Yu et al. [83]	2012	UIF approach	Alleviated Sub-synchronous oscillation in the huge turbine-generated integrated thermal generation unit is analyzed.
Jibo Sun et al. [112]	2011	UIF analysis approach	Damping characteristics of sub-synchronous damping Control (SSDC) compensation were analyzed.

6. SSO Mitigation Approaches

The SSO can be mitigated by different techniques such as filtering techniques, controllers, converters, and FACTS devices. Mitigation methods for SSO are shown in Figure 7.

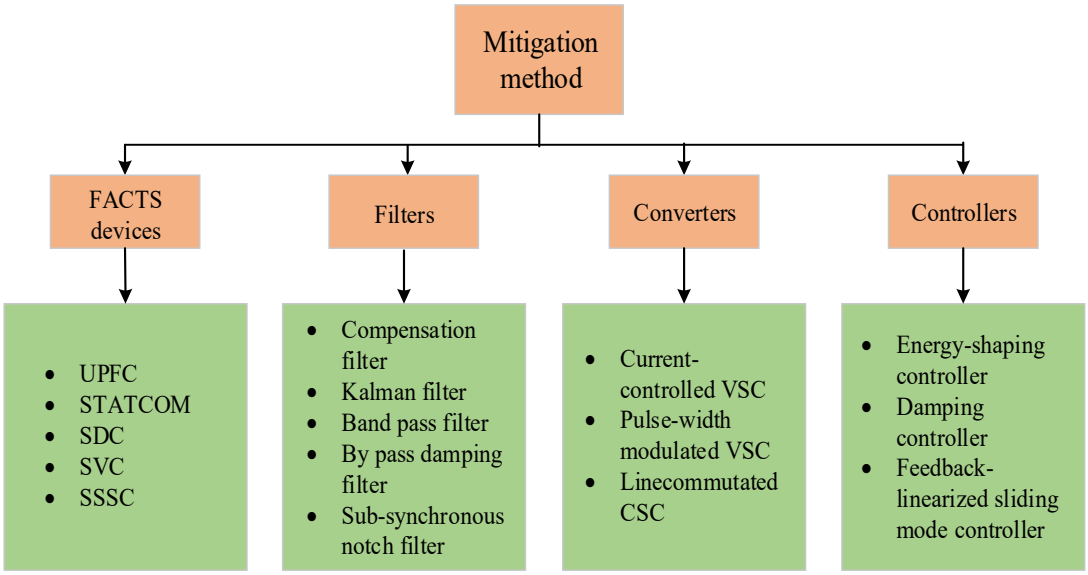

Figure 7. Mitigation methods for SSO.

6.1. Unified Power Flow Controller (UPFC)

The SSR on the turbine generator shaft is mitigated through the UPFC based on fractional-order PI (FOPI) [113]. Likewise, the SSR in the series-compensated system is reduced by incorporating the UPFC with the SSDC [114]. Here, the UPFC control method includes the dq-decoupling control. Similarly, UPFC is utilized to mitigate the SSR in a self-excited induction generator (SEIG) incorporated wind system [115]. Likewise, UPFC is utilized to reduce the SSR and enhance the transient stability during a wind power plant's three-phase short circuit fault [116].

6.2. Static Synchronous Compensator (STATCOM)

The SSR in a series-compensated induction-generator (IG)-involved wind system is diminished by employing the STATCOM with a voltage controller [117]. The eigenvalue analysis approach is utilized to analyze the impact of SSR in IG through STATCOM. Similarly, a weighted predictive control algorithm based on model-free adaptive control is incorporated with the STATCOM to alleviate the SSO [118]. Additionally, by utilizing the enhanced MFAC approach, the tracking error convergence and reliability of the closed-loop system are analyzed. Likewise, STATCOM is utilized to lessen the SSO in multi-machine systems [119–121].

6.3. Supplementary Damping Controller (SDC)

The thyristor-controlled series capacitor-caused SSO is alleviated by employing the SDC [122]. Furthermore, the particle swarm optimization (PSO) algorithm is utilized for the phase compensation process. Likewise, in [123] supplementary damping controller (SDC) is presented based on the active disturbance rejection control to mitigate the forced oscillation in the high-voltage direct current (HVDC) system integrated with a voltage source converter.

6.4. Static Var Compensator (SVC)

The SSO in the power system in China is mitigated by introducing an SVC [124]. Furthermore, a system model is constructed based on the real-time digital simulator. Likewise, series capacitor compensation caused by SSO is mitigated by the damping-controller SVC based on the generalized phase compensation approach [125]. Initially, eigenvalue analysis was conducted on a multi-machine system. Similarly, the SSO induced by the fixed series compensation is diminished by employing the SVC [126]. The impacts of

SVC were also analyzed, such as transient stability of the ac system, transformer overload, and relay failure. On the other hand, to reduce SSR, remote signals obtained from the phasor measurement units (PMU) were utilized [127–129].

6.5. Static Synchronous Series Compensator (SSSC)

The SSO in a series-compensated power system is mitigated by employing the SSSC with the fuzzy logic controller and SSDC [130]. Furthermore, the Chaotic optimization algorithm technique is utilized for SSDC parameter tuning. Likewise, an SSDC-integrated SSSC is utilized in a series-compensated system to diminish the SSR [131]. Here, a chaotic optimization algorithm is used for SSDC parameter tuning. Similarly, hybrid series compensators were used to mitigate the SSO in DFIG-integrated wind systems such as SSSC and fixed capacitor.

6.6. Filtering Approaches

The SSO in a DFIG-integrated wind system is mitigated by employing the motion-induction amplification-based compensation filter and optimal quadratic approach-based proportional-integral (PI) controller [132]. Likewise, an adaptive extended Kalman filtering approach is presented to reduce the SSO in the series-compensated wind farm by recognizing the time-varying sub-synchronous component [133–137].

6.7. Converter Control Approaches

Figure 8 illustrates the DFIG-based wind farm integrated with the series-compensated network [138]. Controlling the active and reactive power are possible using a rotor side converter in Figure 9 and a grid-side converter in Figure 10, resp.

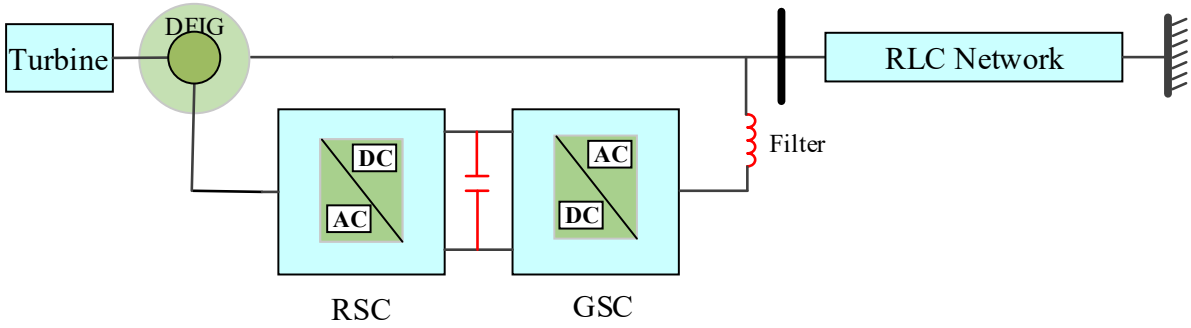

Figure 8. DFIG system linked with series-compensated network.

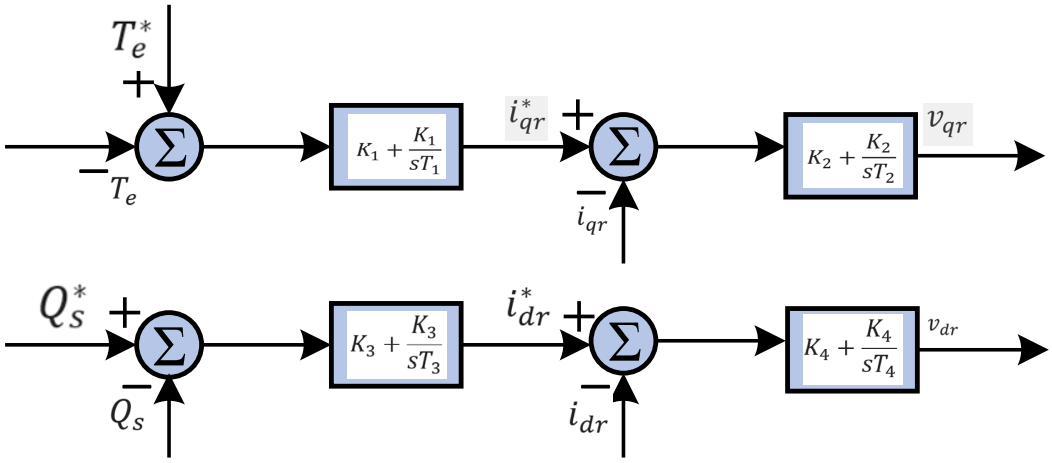

Figure 9. Rotor side converter (* is for reference values).

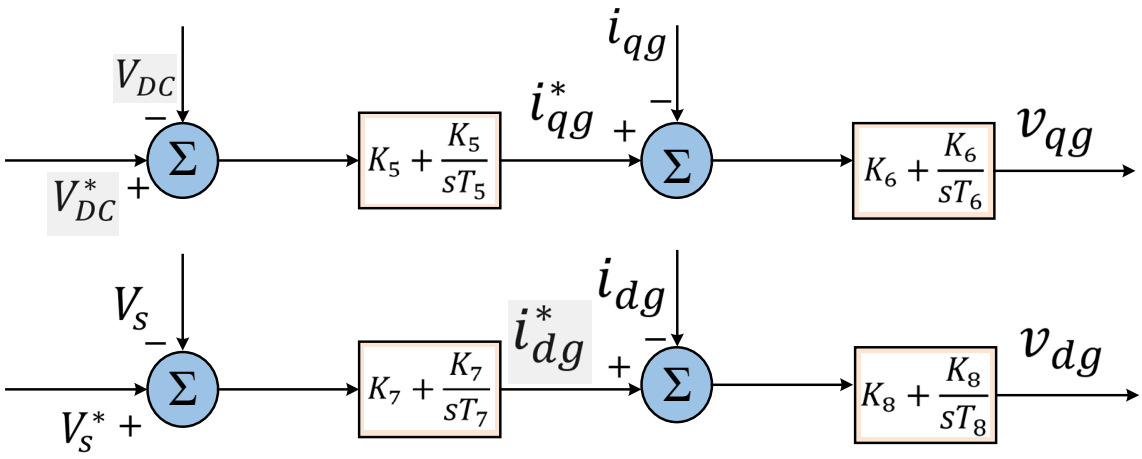

Figure 10. Grid side converter (* is for reference values).

Table 8 summarizes the comparative analysis of converters discussed in this paper.

Table 8. Comparative analysis of converters.

Author	Year	Type of Converter	Position of Converter
Lennart Harnefors et al. [139]	2007	Current-controlled voltage-source converter (VSC)	Grid side
Khaled Alawasa et al. [140]	2013	Pulse-width-modulated (PWM) VSCs	Grid side
Aikang Chen et al. [141]	2018	AC-DC and DC-AC converter	Rotor and grid side
Tianshu Bi et al. [142]	2017	DC-AC converter	Grid side
P. Fischer de Toledo et al. [143]	2010	line-commutated current source converters	Rotor side
Jian Zuo et al. [144]	2017	AC-DC and DC-AC converter	Rotor and grid side
Lin Zhu et al. [145]	2020	AC-DC converter	Rotor side

6.8. Controllers

The energy-shaping controller (ESC) is developed to reduce the sub-synchronous control interaction (SSCI) in DFIG-integrated wind system [146]. Initially, a Hamiltonian model is formulated to examine the system, and the SSR in a series-compensated system is alleviated by employing the conventional damping controller based on Particle Swarm Optimization (PSO) and Fuzzy Logic-Based Damping Controller [147]. Additionally, the stability of the system is analyzed by time-domain simulations, FFT analysis, and a performance index. Similarly, a Feedback-Linearized Sliding Mode Controller (FLSMC) is developed to mitigate the sub-synchronous control interaction (SSCI) in a DFIG-contained wind system [148]. Furthermore, electromagnetic transient simulation and eigenvalue analysis were carried out to evaluate the FLSMC.

7. SSO in Series-Compensated System

A single-line diagram of power system with series-compensated system is shown in Figure 11.

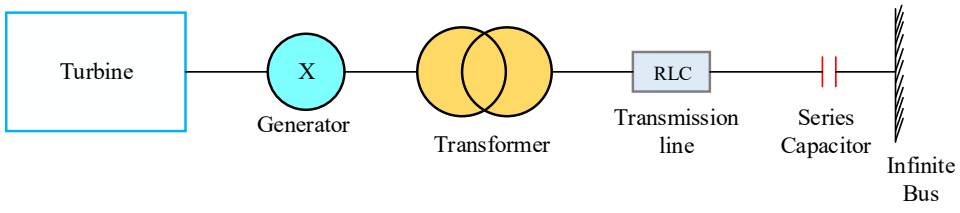

Figure 11. Series-compensated system.

In the IEEE first benchmark system in torsional modes, the SSR is analyzed with the impact of FACTS-based AC power control-loop damping in both constant-angle and power modes [149]. Similarly, by utilizing bifurcation theory, SSR with the IEEE second benchmark method is determined [150–153].

Furthermore, damping SSO is examined using EMTDC through time-domain implementation on the IEEE first benchmark model [154]. Initially, a DFIG-based wind farm is analyzed, producing unstable SSR with negative resistance at slip frequency. So, to overcome this a PMSG-based wind farm is utilized to enhance SSR with oscillation frequency [155]. However, to alleviate SSR-based DFIG wind farms, SSRDC and power system oscillation is enhanced with system reliability [156]. By analyzing eigenvalues, SSR is estimated with series-compensated lines-based SCSEIG in IEEE first benchmark with LLLG fault at remote-compensated lines [157]. Likewise, in a real-world DFIG, RSDC performance through CHIL controller is implemented to restrain SSCI [158]. The Argentinian power systems have been introduced to improve the generation levels in substantial offshore and onshore reinforcements, as well as that of Scotland, which potentially lead to SSR [159]. Additionally, to implement a controller in real time HVDC test rig is utilized. To allow a secure integration and stability system for DFIG-based wind farms to transmit series compensation, SSI is analyzed [160–162].

Impacts of Series Compensation

EHAVC transmission line uses series compensation to improve power transfer capability and improve bus voltages. Table 9 summarizes the comparative analysis for impacts of series compensation on SSO.

Table 9. Comparative analysis for impacts of series compensation.

Author	Year	Transmission Line	Series Compensation Level	Power Plant	Impacts
North American electronic reliability corporation (NERC) [163]	2011	345 kV 80 miles long	50%	Type 3 wind farm (485 MW)	Voltage and significant current waveform distortion.
Muhammad Taha Ali et al. [164]	2019	Transmission line connected with 7.5 KW, 311 V system	35% to 90% for 2.5 s	DFIG-based power system	The SUB mode's damping proportion is reduced and becomes negative when the compensation level is increased.
K. Narendra et al. [165]	2011	54-mile-long 345 kV line	60% (240 MVAR series capacitor)	150-MW type 3 wind farm	Sub-harmonic oscillations were investigated, with the higher usage of wind generators which fed EHV and HV utility networks with series-compensated lines along with the nearer vicinity
Carlos E. Ugalde-Loo et al. [166]	2013	500 kV operating at 60 Hz	20, 50, 80%	Wind farm (892.4 MVA generator)	SSR might be raised due to the interaction between the natural modes of oscillation of turbo generators and network natural frequency when the series compensation is not carefully executed
Mohammad Reza Alizadeh Pahlavani et al. [167]	2011	500 kV compensated transmission line	Reactance of fixed capacitor for three cases such as 0.318, 0.236, and 0.152 (p.u.)	892.4 MVA synchronous generator	The dynamic results showed that GCSC devices operated in the open-loop control method which damped the SSR.
Akshaya Moharana et al. [117]	2014	892.4 MVA	50–60%	500-MW double-cage IG-based wind farm	The STATCOM had prevented a larger overshoot in the shaft torque, and it also stabilized the generator speed, electromagnetic torque, and PCC voltage.
Chao Gao et al. [39]	2017	500kV line	1.97%	DFIG wind farm (3000 MVA)	The SSO is mitigated by increasing the wind pace, only when the series compensation degree is increased.

Table 9. *Cont.*

Author	Year	Transmission Line	Series Compensation Level	Power Plant	Impacts
Akshaya Moharana et al. [168]	2012	-	55%	700 MW type 1 wind farm	No SSR transactions were observed when the wind farm was associated with the LCC HVDC transmission system and the series compensation line. There were no discovered relationships between the current regulator and the rectifier station.
Akshaya Moharana et al. [169]	2014	400 MW transmission line	50 to 90%	700 MW IG-based (type 1) wind farm	No interaction between a rectifier station current regulator and torsional system is found.
Garth D. Irwin et al. [170]	2011	345 kV line	50%	DFIG (type 3) wind farm	-
Yang Wu et al. [171]	2018	220 kV and 500 kV transmission line	25%	220 MVA wind farm	The resonance frequency from the original system of 4.9 Hz is diminished to 4.3 Hz and 4.8 Hz and the resonant frequency is reduced.
Tang Yi et al. [172]	2011		Series-compensated capacitor is 12.35 μF	500 MW wind power system	Only when the power reaches a certain degree, will the series compensation level have a role on SSR.
C. Zhu et al. [173]	2012	Infinite bus (constant voltage source)	10 to 90%	2 MW DFIG system	System unstable due to high series compensations.
Huakun Liu et al. [174]	2016	500 KV	40%	1.5 MW DFIG-based wind farm	The frequency and damping of SSR are exactly calculated through the circuit parameters.

8. Development in Pumped Storage Power Plant (PSPP)

Single pump turbine as well as DFIG-involved long penstock PSPP's dynamic response is analyzed [175]. The output power of the system is maintained through a rotor-side frequency converter. Furthermore, by using the isochronous PI governor, the unit running speed is also controlled by the system's dynamic response. Similarly, an extended Fourier amplitude sensitivity text approach is utilized to compute the parameters' interactions in a pumped storage system (PSS)-integrated hybrid power system [176]. Likewise, the operating stability of hydropower generating systems is directed to exhibit the features for the issues that emerge in ultra-low frequency oscillations [177]. Here, the theoretical stability is directed based on the Routh–Hurwitz criterion and the stability margin region. On the other hand, a framework for optimal scheduling of hydrothermal systems with multiple hydro reservoirs is introduced [178]. This framework is ideally fit for medium- and long-term hydrothermal generating scheduling and captures complex system limitations through fine time resolution. Similarly, in a day-ahead electricity market, a bidding strategy is devised for managing multi-unit PSPP [179]. Here, an Evolutionary Tristate Particle Swarm Optimization (ETPSO) is utilized, in which the tristate coding approach and mutation operation were utilized for a faster convergence process [180]. This model is established based on detailed gate valve modelling and a shared-penstock function.

Similarly, an approach and software were developed to calculate the parameter of the PSPPs [181]. Here, the energy characteristics of PSPPs and electro-chemical Accumulator Batteries (ABs) is examined. As a result, PSPPs are equal to electrochemical Accumulator Batteries in terms of economic qualities. Likewise, the prospect of optimizing the penetration of wind energy into a pumped storage multi-reservoir system is investigated [182]. Here, the optimization is carried out based on the Genetic Algorithm (GA) code. Furthermore, the possibilities of reservoir storage, wind condition, flow, and the curves of equipment parameters are examined based on power generating problems of hydroelectric power plants-wind power plants (HPP-WPP) and PSPP-WPP [183–188].

Recent Advancement in Pumped Storage Power Plant (PSPP)

A Schematic diagram of a variable speed hydro generating unit fed to high-voltage lines is shown in Figure 12. The 765 kV EHV lines are connected to a DFIM for variable speed pumped storage plant prone to sub-synchronous resonance oscillation (SSRO). The HTSG's running temperature distribution of 250 MW with a basic electromagnetic of 870/300-28 is investigated [189] using a three-dimensional commercial Finite Element Analysis (FEA)-based software package at MagNet 7.5 under various phases operating interlude of overloads. In Tehri PSPP (India), the 250 MW DFIM pump turbine's regenerative braking and smooth starting performance with sensor faults and power converter is designated. The following are the distinguishing characteristics of variable speed pumped storage power plants [190]:

1. Renewable and sustainable;
2. Total control of real and reactive powers;
3. Improved energy efficiency;
4. Limited power converter;
5. Control of active and reactive power flow is decoupled;
6. Reliable grid connection.

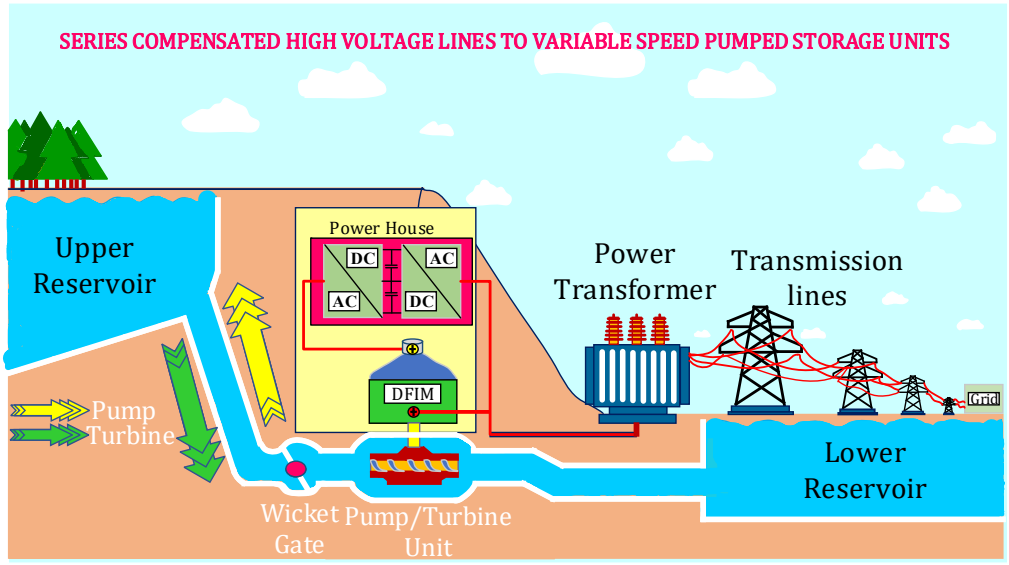

Figure 12. Variable speed hydro generating unit fed to high-voltage lines.

9. Challenges and Future Scopes

Various SSO analysis and alleviation approaches were reviewed in this paper. Based on the research we looked at in the previous sections, it is clear that the current methods for SSO analysis and minimization face several practical, economical, commercial, and environmental problems. Typically, eigenvalue analysis, complex torque coefficient analysis, a frequency scanning approach, an impedance network model (EMT), open-loop modal analysis, and unit interaction factor analysis are used to investigate SSO. Moreover, series compensation plays a significant role in the occurrence of SSO. In addition, series and parallel compensation components, DFIG controllers, and auxiliary controllers have combined to construct an ideal controller that effectively reduces SSO.

9.1. Challenges in SSO Mitigation

1. The SSR phenomena might affect any WPP coupled with the series-compensated transmission line.

2. The main demerit of the time-domain analysis is the huge computational overhead. As a result, time-domain evaluations are not utilized for grid compatibility and system impact assessments of huge power systems.
3. The frequency scanning approach is unsuitable for analyzing the SSCI and SSTI because this approach does not include the controller's dynamic characteristics. Additionally, the effectiveness of this approach is very low.
4. When the series compensation level of the system becomes greater than 50%, there is a possibility for SSO occurrence, which leads to an increase in fault current.
5. The slip power determines the size of the power converter. As a result, the slip power increases with increasing speed adjustment range relative to synchronous speed, increasing the size of the needed converter.
6. Eigenvalue analysis approach is not suitable for complex nonlinear systems.
7. Because of their huge generator-to-turbine inertia ratio and viscous damping torque, hydro systems are typically not susceptible to SSR and have a reduced vulnerability for torsional mode instability. As a result, prior research has yet to focus on the SSR analysis of hydropower facilities, even though the modern hydro system includes the DFIM with PEC for variable speed operation, which influences SSR.
8. The impact of series compensation on DC link stabilization in terms of long-term and short-term stability needs to be identified with a proper damping controller.

9.2. Future Work

1. The damping features of the power system, along with the traditional turbine generator and other kinds of wind farms, are to be scrutinized, including SSCI, IGE, and TI. As a result, an appropriate damping controller needs to be designed.
2. The comparison of DFIG converter controllers and FACTS devices is to mitigate the SSR, which needs to be researched in the form of cost, efficiency, and rating of converters.
3. To satisfy the grid code demands, the design and investigation of robust DFIG converter controllers with SSR damping control and self-tuning need to be inspected.
4. The solidarity of GSC control and RSC of DFIG control has to be inspected.
5. The open challenge for a practical and effective SSCI mitigation strategy is the simultaneous monitoring of fundamental and sub-synchronous frequency components.
6. Compared to the FSC, using GCSC and TCSC series compensation in the DFIG wind farms is more flexible. These solutions based on FACTS are observed to be more expensive comparatively. So, it is possible to dampen the SSR by using DFIG grid-side converter controllers if the FSC is utilized in the transmission network.
7. By adopting a new auxiliary control in DFIM, the neighboring synchronous generator's SSR difficulties and torsional oscillation would be prevented. The hydropower unit's torsional mode durability margins must be examined to accomplish this.

10. Conclusions

In this paper, a literature review of the recent analysis and damping methods for SSO in renewable energy systems is done. The authors have attempted to include most of the advances in the SSO, considering the extremely large number of papers that are published in this area each year. Power electronics devices are widely utilized in power systems due to the increasing power demands. Because of this, SSO failure is seen as a major problem in power systems around the world. At present, several studies have discussed the SSO in terms of every sort of power system and the corresponding method analysis. From those reported in the previous years, the features and the mechanism of SSO in the latest practical incidents have been identified differently. The three major classifications of the SSR phenomenon are SSCI, SSTI, and SSR. The SSTI occurred at the control unit in the components of the HVDC system and wind farm, which is considered an emerging oscillation type that has been studied recently. The most commonly utilized methods of SSO/SSI are eigenvalue analysis, frequency scanning analysis, impedance-based Nyquist

stability analysis, and time-domain simulation analysis. The small-signal model could be analyzed easily, and is useful in the SSDC design. On the other hand, the solving of the non-linear features of the power electronics needs to be considered. Hence, in future perspectives, the major challenges are as below:

1. An investigation of SSR features with different FACTS devices in the multi-area system, which includes multi-machine as it might need variants of a FACTS device along with multiple converters with common DC link capacitors such as GUPFC, UPFC, and IPFC;
2. Design a suitable SSDC for mitigating IGE and TI in power systems with wind power generation and turbine generators;
3. Employing the appropriate and effective converter for a series-compensated transmission line system;
4. Identification of the induction generator effect for variable speed pumped storage fed to an extra high-voltage series-compensated transmission line is a major concern;
5. Converter controllers from DFIM were used to optimize the steady-state voltage profile, which was found to be a good way to reduce SSO.

Author Contributions: All authors have made substantial contributions to the work reported in the manuscript (e.g., review paper collection, writing and editing assistance, general support). All authors have read and agreed to the published version of the manuscript.

Funding: This research received no external funding.

Institutional Review Board Statement: Not applicable.

Informed Consent Statement: Not applicable.

Data Availability Statement: Not applicable.

Acknowledgments: THDC Indian Limited is gratefully acknowledged.

Conflicts of Interest: The authors declare no conflict of interest.

Abbreviations

3L-NPC	Three-level diode clamped converter
ADRC	Active disturbance rejection control
BDF	Bypass damping filter
BTB	Back to back power converter
CHIL	Controller hardware in the loop
COA	Chaotic optimization algorithm technique
DFIM	Doubly fed induction machine
DPC	Direct stator-power controller
D-PMSG	Direct-drive permanent magnet synchronous generator
DPWM	Discontinuous pulse width modulation
DSC	Directed rotor-speed controller
EMT	Electromagnetic transient simulation
EMTP-RV	Electromagnetic transient RV program
ESC	Energy-shaping controller
FACTS	Flexible AC transmission system
FCIM	Frequency-coupled impedance model
FEA	Finite element analysis
FFT	Fast furrier transform
FLBDC	Fuzzy logic-based damping controller
FLC	Fuzzy logic controller
FLSMC	Feedback-linearized sliding mode controller
FOSSO	Frequently over-threshold sub-synchronous oscillation
GSC	Grid-side converter
GWO	Grey wolf optimizer algorithm
HFR	High-frequency resonance

HPE	Hydrogen production equipment
HPP-WPP	Hydroelectric power plants-wind power plants
HTSG	Hydro turbine synchronous generator
HVDC	High-voltage direct current
IEEE FBM	IEEE first benchmark model
IGE	Induction generator effect
INM	Impedance network modelling
LCC	Line-commutated current source converters
LOE	Loss-of-excitation
LQR	Linear-quadratic regulator
LSM	Least-squares method
MFAC	Model-free adaptive control
MFO	Multi-frequency oscillation
MIA	Motion-induction amplification
MIC	Motion-induction compensation
NSGA-III	Non-dominated sorting genetic algorithm
NSOMR	Near strong open-loop modal resonance
PDF	Probability distribution function
PLL	Phase-locked loop
PSO	Particle swarm optimization
PSPP-WPP	Pumped-storage power plants-wind power plants
PV	Photovoltaic system
QSA	Quantitative stability analysis
RSC	Rotor-side converter
RSDC	Rotor side damping controller
SCSEIG	Single cage self-excited induction generators
SEDC	Supplementary excitation damping controller
SHPP	Small hydro power plant
SNFs	Sub-synchronous notch filters
SPSG	Salient pole synchronous generator
SPWM	Sinusoidal pulse width modulation
SSDC	Supplementary sub-synchronous damping control
SSI	Sub-synchronous interaction
SSO	Sub-synchronous oscillation
SSODS	Sub-synchronous oscillation dynamic suppressor
SSR	Sub-synchronous resonance
STO	Shafting torsional oscillation
SVC	Static var compensator
TA	Torque amplification
TCSC	Thyristor-controlled series capacitor
TI	Torsional interactions
TLBO	Teaching–learning-based optimization
T-PSH	Ternary-pumped storage hydropower
UIF	Unit interaction factor
VSWGs	Variable-speed wind generators
WAMS	Wide area measurement system
WOA	Whale optimization algorithm

References

1. Shair, J.; Xie, X.; Wang, L.; Liu, W.; He, J.; Liu, H. Overview of emerging subsynchronous oscillations in practical wind power systems. *Renew. Sustain. Energy Rev.* **2019**, *99*, 159–168. [CrossRef]
2. Chi, Y.; Tang, B.; Hu, J.; Tian, X.; Tang, H.; Li, Y.; Sun, S.; Shi, L.; Shuai, L. Overview of mechanism and mitigation measures on multi-frequency oscillation caused by large-scale integration of wind power. *CSEE J. Power Energy Syst.* **2019**, *5*, 433–443.
3. Zhang, J.; Xiao, X.; Zhang, P.; Luo, C.; Wu, Y.; Lu, J.; Ren, L. Suppressing intermittent subsynchronous oscillation via subsynchronous modulation of reactive current. *IEEE Trans. Power Deliv.* **2015**, *30*, 2321–2330. [CrossRef]
4. Fateh, D.; Birjandi, A.A.M.; Guerrero, J.M. Safe Sub Synchronous Oscillations Response for Large DFIG-Based Wind Farms. *IEEE Access* **2020**, *8*, 169822–169834. [CrossRef]

5. Lv, J.; Dong, P.; Shi, G.; Cai, X.; Rao, H.; Chen, J. Subsynchronous oscillation of large DFIG-based wind farms integration through MMC-based HVDC. In Proceedings of the 2014 International Conference on Power System Technology, Chengdu, China, 20–22 October 2014; pp. 2401–2408.
6. Wu, M.; Xie, L.; Cheng, L.; Sun, R. A study on the impact of wind farm spatial distribution on power system sub-synchronous oscillations. *IEEE Trans. Power Syst.* **2015**, *31*, 2154–2162. [CrossRef]
7. Chen, L.; Zhao, W.; Wang, F.; Wang, Q.; Huang, S. An interharmonic phasor and frequency estimator for subsynchronous oscillation identification and monitoring. *IEEE Trans. Instrum. Meas.* **2018**, *68*, 1714–1723. [CrossRef]
8. Wang, L.; Xie, X.; Liu, H.; Zhan, Y.; He, J.; Wang, C. Review of emerging SSR/SSO issues and their classifications. *J. Eng.* **2017**, *2017*, 1666–1670. [CrossRef]
9. Chen, C.; Du, W.; Wang, H.; Littler, T. Sub-synchronous oscillations in power systems caused by grid-connected wind farms—A survey of mechanism studies. *CSEE J. Power Energy Syst.* **2018**, *4*, 495–503. [CrossRef]
10. Deng, J.; Wang, J.; Li, S.; Zhang, H.; Peng, S.; Wang, T. Adaptive damping design of PMSG integrated power system with virtual synchronous generator control. *Energies* **2020**, *13*, 2037. [CrossRef]
11. Tao, S.; Zhao, L.; Liao, K.; Liu, Y. Probability assessment of characteristics of sub-synchronous oscillation in D-PMSG-based wind power generation system. *IEEE Access* **2019**, *7*, 133159–133169. [CrossRef]
12. Liu, H.; Xie, X. Impedance network modeling and quantitative stability analysis of sub-/super-synchronous oscillations for large-scale wind power systems. *IEEE Access* **2018**, *6*, 34431–34438. [CrossRef]
13. Tian, X.; Chi, Y.; Li, Y.; Tang, H.; Liu, C.; Su, Y. Sub-synchronous oscillation coordinated damping optimization control of DFIG and SVG and self-optimization parameter tuning method. *CSEE J. Power Energy Syst.* **2019**, *7*, 1.
14. Shao, B.; Zhao, S.; Yang, Y.; Gao, B.; Blaabjerg, F. Sub-synchronous oscillation characteristics and analysis of direct-drive wind farms with VSC-HVDC systems. *IEEE Trans. Sustain. Energy* **2020**, *12*, 1127–1140. [CrossRef]
15. Du, W.; Wang, Y.; Wang, H. Torsional subsynchronous oscillations caused by grid-connected wind farms in a complex multi-machine power system under the condition of near strong modal resonance. *Electr. Power Syst. Res.* **2020**, *179*, 106085. [CrossRef]
16. Wang, T.; Yang, J.; Padhee, M.; Bi, J.; Pal, A.; Wang, Z. Robust, coordinated control of SSO in wind-integrated power system. *IET Renew. Power Gener.* **2020**, *14*, 1031–1043. [CrossRef]
17. Xu, Y.; Gu, Z.; Sun, K. Characterization of subsynchronous oscillation with wind farms using describing function and generalized Nyquist criterion. *IEEE Trans. Power Syst.* **2019**, *35*, 2783–2793. [CrossRef]
18. Han, Y.; Sun, H.; Huang, B.; Qin, S.; Mu, Q.; Yu, Y. Discrete-Time State-Space Construction Method for SSO Analysis of Renewable Power Generation Integrated AC/DC Hybrid System. *IEEE Trans. Power Syst.* **2022**, *37*, 2322–2334. [CrossRef]
19. Xu, Y.; Cao, Y. Sub-synchronous oscillation in PMSGs based wind farms caused by amplification effect of GSC controller and PLL to harmonics. *IET Renew. Power Gener.* **2018**, *12*, 844–850. [CrossRef]
20. Xie, X.; Wang, S.; Liu, H.; Zhao, Q. Hydrogen production equipment-based supplementary damping control to mitigate subsynchronous oscillation in wind power systems. *IET Renew. Power Gener.* **2019**, *13*, 2715–2722. [CrossRef]
21. Suriyaarachchi, D.H.R.; Annakkage, U.D.; Karawita, C.; Jacobson, D.A. A procedure to study sub-synchronous interactions in wind integrated power systems. *IEEE Trans. Power Syst.* **2012**, *28*, 377–384. [CrossRef]
22. Yan, G.; Hu, W.; Jia, Q.; Liu, K.; Wang, J. Analysis of Subsynchronous Oscillation of Direct Drive PMSG Based Wind Farm Under Low Operating Condition. *J. Electr. Eng. Technol.* **2021**, *16*, 1–13. [CrossRef]
23. Yunhong, L.; Hui, L.; Yu, L.; Xiaorong, X.; Shaoyu, L. Case study and mechanism analysis of sub-synchronous oscillation in wind power plants. In Proceedings of the 2015 IEEE Power & Energy Society General Meeting, Denver, CO, USA, 26–30 July 2015; pp. 1–5.
24. Du, W.; Ren, B.; Wang, H.; Wang, Y. Comparison of methods to examine sub-synchronous oscillations caused by grid-connected wind turbine generators. *IEEE Trans. Power Syst.* **2019**, *34*, 4931–4943. [CrossRef]
25. Badrzadeh, B.; Saylors, S. Susceptibility of wind turbines to sub-synchronous control and torsional interaction. In Proceedings of the PES T&D, Orlando, FL, USA, 7–10 May 2012; pp. 1–8.
26. Kumar, R.; Singh, R.; Ashfaq, H.; Singh, S.K.; Badoni, M. Power system stability enhancement by damping and control of Sub-synchronous torsional oscillations using Whale optimization algorithm-based Type-2 wind turbines. *ISA Trans.* **2021**, *108*, 240–256. [CrossRef] [PubMed]
27. Mohammadpour, H.A.; Islam, M.M.; Santi, E.; Shin, Y.J. SSR damping in fixed-speed wind farms using series FACTS controllers. *IEEE Trans. Power Deliv.* **2015**, *31*, 76–86. [CrossRef]
28. Wang, Y.; Wang, L.; Jiang, Q. Mitigation SSOs in PMSG-based Wind Farms with Synchronous Condenser. In Proceedings of the 2020 IEEE Power & Energy Society General Meeting (PESGM), Montreal, QC, Canada, 2–6 August 2020; pp. 1–5.
29. Mahmud, R.; Hoke, A.; White, J. Impact of Aggregated PV on Subsynchronous Torsional Interaction. In Proceedings of the 2020 47th IEEE Photovoltaic Specialists Conference (PVSC), Calgary, AB, Canada, 15 June 2020–21 August 2020; pp. 342–347.
30. Zhao, S.; Li, R.; Gao, B.; Wang, N.; Zhang, X. Subsynchronous oscillation of PV plants integrated to weak AC networks. *IET Renew. Power Gener.* **2019**, *13*, 409–417. [CrossRef]
31. Khayyatzadeh, M.; Kazemzadeh, R. Sub-synchronous resonance damping using high penetration PV plant. *Mech. Syst. Signal Process.* **2017**, *84*, 431–444. [CrossRef]

32. Yang, L.; Yu, Z.; Xu, T.; He, J.; Wang, C.; Pang, C. Eigenvalue analysis of subsynchronous oscillation in grid-connected PV power stations. In Proceedings of the 2017 China International Electrical and Energy Conference (CIEEC), Beijing, China, 25–27 October 2017; pp. 285–290.
33. Yi, M.; Huang, Y.; Zhu, D. Research on Subsynchronous Oscillation of Photovoltaic and Battery Storage Systems Integrated to Weak Grid. In Proceedings of the 2020 4th International Conference on HVDC (HVDC), Xi'an, China, 6–9 November 2020; pp. 282–286.
34. Varma, R.K.; Salehi, R. SSR mitigation with a new control of PV solar farm as STATCOM (PV-STATCOM). *IEEE Trans. Sustain. Energy* **2017**, *8*, 1473–1483. [CrossRef]
35. Bladh, J.; Sundqvist, P.; Lundin, U. Torsional stability of hydropower units under influence of subsynchronous oscillations. *IEEE Trans. Power Syst.* **2013**, *28*, 3826–3833. [CrossRef]
36. Choo, Y.C.; Agalgaonkar, A.P.; Muttaqi, K.M.; Perera, S.; Negnevitsky, M. Subsynchronous torsional behaviour of a hydraulic turbine-generator unit connected to a HVDC system. In Proceedings of the 2008 Australasian Universities Power Engineering Conference, Sydney, Australia, 14–17 December 2008; pp. 1–6.
37. Choo, Y.C.; Agalgaonkar, A.P.; Muttaqi, K.M.; Perera, S.; Negnevitsky, M. Analysis of subsynchronous torsional interaction of HVDC system integrated hydro units with small generator-to-turbine inertia ratios. *IEEE Trans. Power Syst.* **2013**, *29*, 1064–1076. [CrossRef]
38. Gu, Y.; Liu, J.; Green, T.C.; Li, W.; He, X. Motion-induction compensation to mitigate sub-synchronous oscillation in wind farms. *IEEE Trans. Sustain. Energy* **2019**, *11*, 1247–1256. [CrossRef]
39. Gao, C.; Liu, H.; Jiang, H.; Li, Y.; Tang, X. Research on the sub-synchronous oscillation in wind power connected to series compensated power system and its influencing factors. *CES Trans. Electr. Mach. Syst.* **2017**, *1*, 334–340. [CrossRef]
40. Yuan, L.; Meng, K.; Huang, J.; Dong, Z.Y. Investigating subsynchronous oscillations caused by interactions between PMSG-based wind farms and weak AC systems. *Int. J. Electr. Power Energy Syst.* **2020**, *115*, 105477. [CrossRef]
41. Yang, F.; Shi, L.; Ni, Y.; Yao, L. Sub-synchronous oscillation analysis of transmission system with multiple wind farms. In Proceedings of the 2017 IEEE Power & Energy Society General Meeting, Chicago, IL, USA, 16–20 July 2017; pp. 1–5.
42. Xu, Y.; Zhao, S. Mitigation of subsynchronous resonance in series-compensated DFIG wind farm using active disturbance rejection control. *IEEE Access* **2019**, *7*, 68812–68822. [CrossRef]
43. Leon, A.E.; Solsona, J.A. Sub-synchronous interaction damping control for DFIG wind turbines. *IEEE Trans. Power Syst.* **2014**, *30*, 419–428. [CrossRef]
44. Faried, S.O.; Unal, I.; Rai, D.; Mahseredjian, J. Utilizing DFIG-based wind farms for damping subsynchronous resonance in nearby turbine-generators. *IEEE Trans. Power Syst.* **2012**, *28*, 452–459. [CrossRef]
45. Karaagac, U.; Faried, S.O.; Mahseredjian, J.; Edris, A.A. Coordinated control of wind energy conversion systems for mitigating subsynchronous interaction in DFIG-based wind farms. *IEEE Trans. Smart Grid* **2014**, *5*, 2440–2449. [CrossRef]
46. Li, J.; Zhang, X.P. Impact of increased wind power generation on subsynchronous resonance of turbine-generator units. *J. Mod. Power Syst. Clean Energy* **2016**, *4*, 219–228. [CrossRef]
47. Bin, Z.; Hui, L.; Mingyu, W.; Yaojun, C.; Shengquan, L.; Dong, Y.; Chao, Y.; Yaogang, H.; Zhe, C.; Senior Member, I.E.E.E. An active power control strategy for a DFIG-based wind farm to depress the subsynchronous resonance of a power system. *Int. J. Electr. Power Energy Syst.* **2015**, *69*, 327–334. [CrossRef]
48. Bian, X.; Ding, Y.; Jia, Q.; Shi, L.; Zhang, X.P.; Lo, K.L. Mitigation of sub-synchronous control interaction of a power system with DFIG-based wind farm under multi-operating points. *IET Gener. Transm. Distrib.* **2018**, *12*, 5834–5842. [CrossRef]
49. Taherahmadi, J.; Jafarian, M.; Asefi, M.N. Using adaptive control in DFIG-based wind turbines to improve the subsynchronous oscillations of nearby synchronous generators. *IET Renew. Power Gener.* **2017**, *11*, 362–369. [CrossRef]
50. Ghafouri, M.; Karaagac, U.; Karimi, H.; Jensen, S.; Mahseredjian, J.; Faried, S.O. An LQR controller for damping of subsynchronous interaction in DFIG-based wind farms. *IEEE Trans. Power Syst.* **2017**, *32*, 4934–4942. [CrossRef]
51. Ma, J.; Liu, F.; Jiang, L.; Wu, M.; Li, Y.; Wang, W. Multi-DFIG aggregated model based SSR analysis considering wind spatial distribution. *IET Renew. Power Gener.* **2019**, *13*, 549–554. [CrossRef]
52. Du, W.; Chen, C.; Wang, H. Subsynchronous interactions induced by DFIGs in power systems without series compensated lines. *IEEE Trans. Sustain. Energy* **2017**, *9*, 1275–1284. [CrossRef]
53. Bizzarri, F.; Brambilla, A.; Milano, F. Simplified model to study the induction generator effect of the subsynchronous resonance phenomenon. *IEEE Trans. Energy Convers.* **2018**, *33*, 889–892. [CrossRef]
54. Wang, L.; Xie, X.; Jiang, Q.; Liu, X. Centralised solution for subsynchronous control interaction of doubly fed induction generators using voltage-sourced converter. *IET Gener. Transm. Distrib.* **2015**, *9*, 2751–2759. [CrossRef]
55. Li, P.; Wang, J.; Xiong, L.; Ma, M.; Khan, M.W.; Huang, S. Robust finite-time controller for damping of subsynchronous resonance in doubly fed induction generator wind farm. *J. Vib. Control* **2021**, *27*, 129–139. [CrossRef]
56. Wu, X.; Ning, W.; Yin, T.; Yang, X.; Tang, Z. Robust design method for the SSDC of a DFIG based on the practical small-signal stability region considering multiple uncertainties. *IEEE Access* **2018**, *6*, 16696–16703. [CrossRef]
57. Wang, L.; Peng, J.; You, Y.; Ma, H. SSCI performance of DFIG with direct controller. *IET Gener. Transm. Distrib.* **2017**, *11*, 2697–2702. [CrossRef]
58. Du, W.; Chen, X.; Wang, H. A method of open-loop modal analysis to examine the SSOs in a multi-machine power system with multiple variable-speed wind generators. *IEEE Trans. Power Syst.* **2017**, *33*, 4297–4307. [CrossRef]

59. Xu, Y.; Zhao, S.; Cao, Y.; Sun, K. Understanding subsynchronous oscillations in DFIG-based wind farms without series compensation. *IEEE Access* **2019**, *7*, 107201–107210. [CrossRef]
60. Walker, D.N.; Bowler, C.E.J.; Jackson, R.L.; Hodges, D.A. Results of subsynchronous resonance test at Mohave. *IEEE Trans. Power Appar. Syst.* **1975**, *94*, 1878–1889. [CrossRef]
61. Farmer, R.G.; Schwalb, A.L.; Katz, E. Navajo project report on subsynchronous resonance analysis and solutions. *IEEE Trans. Power Appar. Syst.* **1977**, *96*, 1226–1232. [CrossRef]
62. Xie, X.; Guo, X.; Han, Y. Mitigation of multimodal SSR using SEDC in the Shangdu series-compensated power system. *IEEE Trans. Power Syst.* **2010**, *26*, 384–391. [CrossRef]
63. Adams, J.; Carter, C.; Huang, S.H. ERCOT experience with sub-synchronous control interaction and proposed remediation. In Proceedings of the PES T&D 2012, Orlando, FL, USA, 7–10 May 2012; pp. 1–5.
64. Bahrman, M.; Larsen, E.V.; Piwko, R.J.; Patel, H.S. Experience with HVDC-turbine-generator torsional interaction at Square Butte. *IEEE Trans. Power Appar. Syst.* **1980**, *3*, 966–975. [CrossRef]
65. Lee, D.C.; Beaulieu, R.E.; Rogers, G.J. Effects of governor characteristics on turbo-generator shaft torsionals. *IEEE Trans. Power Appar. Syst.* **1985**, *6*, 1254–1261. [CrossRef]
66. Wang, L.; Xie, X.; Jiang, Q.; Liu, H.; Li, Y.; Liu, H. Investigation of SSR in practical DFIG-based wind farms connected to a series-compensated power system. *IEEE Trans. Power Syst.* **2014**, *30*, 2772–2779. [CrossRef]
67. Shu, D.; Xie, X.; Rao, H.; Gao, X.; Jiang, Q.; Huang, Y. Sub-and super-synchronous interactions between STATCOMs and weak AC/DC transmissions with series compensations. *IEEE Trans. Power Electron.* **2017**, *33*, 7424–7437. [CrossRef]
68. Wan, Y.H. *Synchronized Phasor Data for Analyzing Wind Power Plant Dynamic Behavior and Model Validation (No. NREL/TP-5500-57342)*; National Renewable Energy Lab. (NREL): Golden, CO, USA, 2013.
69. Wu, M.; Sun, R.; Cheng, L.; Xie, L. *Parameter Sensitivity Analysis for Sub-Synchronous Oscillations in Wind-Integrated Power Systems*; Texas A&M University: College Station, TX, USA, 2010.
70. Xiao, X.; Luo, C.; Zhang, J.; Yang, W.; Wu, Y. Analysis of frequently over-threshold subsynchronous oscillation and its suppression by subsynchronous oscillation dynamic suppressor. *IET Gener. Transm. Distrib.* **2016**, *10*, 2127–2137. [CrossRef]
71. Duc Tung, D.; Van Dai, L.; Le Quyen, C. Subsynchronous resonance and FACTS-novel control strategy for its mitigation. *J. Eng.* **2019**, *2019*, 1–14. [CrossRef]
72. Liu, H.; Xie, X.; He, J.; Xu, T.; Yu, Z.; Wang, C.; Zhang, C. Subsynchronous interaction between direct-drive PMSG based wind farms and weak AC networks. *IEEE Trans. Power Syst.* **2017**, *32*, 4708–4720. [CrossRef]
73. Xie, X.; Zhang, X.; Liu, H.; Liu, H.; Li, Y.; Zhang, C. Characteristic analysis of subsynchronous resonance in practical wind farms connected to series-compensated transmissions. *IEEE Trans. Energy Convers.* **2017**, *32*, 1117–1126. [CrossRef]
74. Kim, D.J.; Moon, Y.H.; Nam, H.K. SSR small-signal stability analysis program of power systems and its application to IEEE benchmark systems. In Proceedings of the 2007 IEEE Lausanne Power Tech, Lausanne, Switzerland, 1–5 July 2007; pp. 161–166.
75. Zhang, D.; Xiao, X.N.; Yang, L.; Gao, B.F. Research on SSO caused by HVDC based on eigenvalue analysis. In *Advanced Materials Research*; Trans Tech Publications Ltd.: Stafa-Zuerich, Switzerland, 2012; Volume 383, pp. 4792–4798.
76. Feng, G.; Qifei, H.; Zhiguo, H.; Baohui, Z. The research of sub synchronous oscillation in PMSG wind farm. In Proceedings of the 2016 IEEE PES Asia-Pacific Power and Energy Engineering Conference (APPEEC), Xi'an, China, 25–28 October 2016; pp. 1883–1887.
77. Zhang, P.; Bi, T.; Xiao, S.; Xue, A. An online measurement approach of generators' torsional mechanical damping coefficients for subsynchronous oscillation analysis. *IEEE Trans. Power Syst.* **2014**, *30*, 585–592. [CrossRef]
78. Xu, K.; Zhao, C.; Zhang, J.; Guo, C. The application of complex torque coefficient method in multi-generator system. In *Electrical Power Systems and Computers*; Springer: Berlin/Heidelberg, Germany, 2011; pp. 299–306.
79. Johansson, N.; Ängquist, L.; Nee, H.P. A comparison of different frequency scanning methods for study of subsynchronous resonance. *IEEE Trans. Power Syst.* **2010**, *26*, 356–363. [CrossRef]
80. Liu, W.; Xie, X.; Shair, J.; Liu, H.; He, J. Frequency-coupled impedance model-based sub-synchronous interaction analysis for direct-drive wind turbines connected to a weak AC grid. *IET Renew. Power Gener.* **2019**, *13*, 2966–2976. [CrossRef]
81. Yuan, L.; Meng, K.; Huang, J.; Sun, Y.; Dong, Z.Y. Stability analysis of grid-connected VSC based on impedance modelling. In Proceedings of the 8th Renewable Power Generation Conference (RPG 2019), Shanghai, China, 24–25 October 2019; pp. 1–6.
82. Du, W.; Wang, Y.; Wang, H.F.; Fu, Q. Open-loop modal analysis to identify the SSO instability risk caused by grid-connected wind farms. *Int. J. Electr. Power Energy Syst.* **2019**, *107*, 352–362. [CrossRef]
83. Yu, Y.; Wei, Q.; Xiao-bin, Z.; Jing, D.; Xi-tian, W. Evaluation of subsynchronous oscillation of Xiluodu right station-Guangdong double line ±500kV DC transmission project. In Proceedings of the 2012 IEEE International Conference on Power System Technology (POWERCON), Auckland, New Zealand, 30 October 2012–2 November 2012; pp. 1–4.
84. Huang, B.; Sun, H.; Liu, Y.; Wang, L.; Chen, Y. Study on subsynchronous oscillation in D-PMSGs-based wind farm integrated to power system. *IET Renew. Power Gener.* **2019**, *13*, 16–26. [CrossRef]
85. He, C.; Sun, D.; Song, L.; Ma, L. Analysis of subsynchronous resonance characteristics and influence factors in a series compensated transmission system. *Energies* **2019**, *12*, 3282. [CrossRef]
86. Purushothaman, S.; De Leon, F. Eliminating subsynchronous oscillations with an induction machine damping unit (IMDU). *IEEE Trans. Power Syst.* **2010**, *26*, 225–232. [CrossRef]

87. Xiao, S.W.; Shu, L.L. Damping Analysis of Subsynchronous Oscillation Caused by HVDC. In *Advanced Materials Research*; Trans Tech Publications Ltd.: Stafa-Zuerich, Switzerland, 2013; Volume 732, pp. 1065–1068.
88. Gao, B.F.; Liu, J.; Zhao, S.Q.; Xu, K. Analysis on Sub-Synchronous Damping Characteristic of VSC-HVDC. In *Advanced Materials Research*; Trans Tech Publications Ltd.: Stafa-Zuerich, Switzerland, 2014; Volume 860, pp. 2062–2067.
89. Li, W.; Xiao, X.; Tao, S. Design and engineering practice of HVDC SSDC for suppressing sub-synchronous oscillations. In Proceedings of the 2017 IEEE Power & Energy Society General Meeting, Chicago, IL, USA, 16–20 July 2017; pp. 1–5.
90. Tabesh, A.; Iravani, R. On the application of the complex torque coefficients method to the analysis of torsional dynamics. *IEEE Trans. Energy Convers.* **2005**, *20*, 268–275. [CrossRef]
91. Zhang, H.; Li, J.; Wen, J.; Zhang, S.; Tian, B. The Complex Torque Coefficient Applied in Subsynchronous Oscillation Caused by HVDC. *IOP Conf. Ser.Mater. Sci. Eng.* **2019**, *533*, 012004. [CrossRef]
92. Zhu, X.; Sun, H.; Wen, J.; Cheng, S. Improved complex torque coefficient method using CPCM for multi-machine system SSR analysis. *IEEE Trans. Power Syst.* **2014**, *29*, 2060–2068. [CrossRef]
93. Wang, Y.; Du, W.; Chen, C.; Zhen, Z.; Wang, H. Investigation on sub-synchronous oscillations in DFIG-based transmission system based on improved complex torque coefficients method. *J. Eng.* **2019**, *2019*, 2244–2249. [CrossRef]
94. Annakkage, M.S.; Karawita, C.; Annakkage, U.D. Frequency scan-based screening method for device dependent sub-synchronous oscillations. *IEEE Trans. Power Syst.* **2015**, *31*, 1872–1878. [CrossRef]
95. Ren, W.; Larsen, E. A refined frequency scan approach to sub-synchronous control interaction (SSCI) study of wind farms. *IEEE Trans. Power Syst.* **2015**, *31*, 3904–3912. [CrossRef]
96. Adams, J.; Pappu, V.A.; Dixit, A. ERCOT experience screening for sub-synchronous control interaction in the vicinity of series capacitor banks. In Proceedings of the 2012 IEEE Power and Energy Society General Meeting, San Diego, CA, USA, 22–26 July 2012; pp. 1–5.
97. Cheng, Y.; Huang, S.H.; Rose, J. A series capacitor-based frequency scan method for SSR studies. *IEEE Trans. Power Deliv.* **2019**, *34*, 2135–2144. [CrossRef]
98. Sahni, M.; Muthumuni, D.; Badrzadeh, B.; Gole, A.; Kulkarni, A. Advanced screening techniques for sub-synchronous interaction in wind farms. In Proceedings of the PES T&D 2012, Orlando, FL, USA, 7–10 May 2012; pp. 1–9.
99. Cho, H.; Oh, S.; Nam, S.; Lee, B. Non-linear dynamics based sub-synchronous resonance index by using power system measurement data. *IET Gener. Transm. Distrib.* **2018**, *12*, 4026–4033. [CrossRef]
100. Rauhala, T.; Gole, A.M.; Järventausta, P. Detection of subsynchronous torsional oscillation frequencies using phasor measurement. *IEEE Trans. Power Deliv.* **2015**, *31*, 11–19. [CrossRef]
101. Rauhala, T.; Järventausta, P. On feasibility of SSDC to improve the effect of HVDC on subsynchronous damping on several lower range torsional oscillation modes. In Proceedings of the IEEE PES General Meeting, Minneapolis, MN, USA, 25–29 July 2010; pp. 1–8.
102. Yuan, S.; Hao, Z.; Ma, H.; Shu, J. Impedance Modeling of D-PMSG Considering Currents Frequency Coupling. In Proceedings of the 2019 IEEE 8th International Conference on Advanced Power System Automation and Protection (APAP), Xi'an, China, 21–24 October 2019; pp. 1494–1497.
103. Qiao, D.; Wang, Z.; Sun, Y.; Zhong, Y.; Zhang, J.; Xu, C.; Zhu, K.; Xue, A. Analysis of Subsynchronous Oscillation in the System Interconnected with Offshore Wind farm by VSC-HVDC Based on Impedance Method. In Proceedings of the 2019 9th International Conference on Power and Energy Systems (ICPES), Perth, Australia, 10–12 December 2019; pp. 1–5.
104. Liu, H.; Xie, X.; Gao, X.; Liu, H.; Li, Y. Stability analysis of SSR in multiple wind farms connected to series-compensated systems using impedance network model. *IEEE Trans. Power Syst.* **2017**, *33*, 3118–3128. [CrossRef]
105. Nath, R.; Grande-Moran, C. Study of sub-synchronous control interaction due to the interconnection of wind farms to a series compensated transmission system. In Proceedings of the PES T&D 2012, Orlando, FL, USA, 7–10 May 2012; pp. 1–6.
106. Zhang, X.; Xie, X.; Liu, H.; Li, Y. Robust subsynchronous damping control to stabilise SSR in series-compensated wind power systems. *IET Gener. Transm. Distrib.* **2019**, *13*, 337–344. [CrossRef]
107. Du, W.; Chen, X.; Fu, Q.; Wang, H.; Littler, T. Sub-synchronous Oscillations Caused by Grid-connected PMSGs under the Condition of Near Strong Open-Loop Modal Resonance. *Electr. Power Compon. Syst.* **2019**, *47*, 1731–1743. [CrossRef]
108. Du, W.; Wang, Y.; Wang, H.F. Frequency drift of sub-synchronous oscillations caused by the DFIG wind farms when the wind speed varies. *Int. J. Electr. Power Energy Syst.* **2018**, *103*, 317–325. [CrossRef]
109. Du, W.; Fu, Q.; Wang, H. Method of open-loop modal analysis for examining the subsynchronous interactions introduced by VSC control in an MTDC/AC system. *IEEE Trans. Power Deliv.* **2017**, *33*, 840–850. [CrossRef]
110. Du, W.; Wang, X.; Wang, H. Sub-synchronous interactions caused by the PLL in the grid-connected PMSG for the wind power generation. *Int. J. Electr. Power Energy Syst.* **2018**, *98*, 331–341. [CrossRef]
111. Li, Z.; Wan, Q.L.; Zhang, X.P.; Wang, B.B.; Zhou, K.L. Study on the SSO caused by HVDC link in hybrid AC-DC power systems. In Proceedings of the 9th IET International Conference on AC and DC Power Transmission (ACDC 2010), London, UK, 19–21 October 2010.
112. Sun, J.; Wang, X.; Xv, Y.; Sun, H. Analysis of characteristics of damping compensated by subsynchronous damping control in HVDC system. In Proceedings of the 2011 4th International Conference on Electric Utility Deregulation and Restructuring and Power Technologies (DRPT), Weihai, China, 6–9 July 2011; pp. 428–432.

113. Raju, D.K.; Umre, B.S.; Junghare, A.S.; Babu, B.C. Mitigation of subsynchronous resonance with fractional-order PI based UPFC controller. *Mech. Syst. Signal Process.* **2017**, *85*, 698–715. [CrossRef]
114. Zhu, X.; Jin, M.; Kong, X.; Zhao, J.; Liu, J.; Zhou, Q. Subsynchronous resonance and its mitigation for power system with unified power flow controller. *J. Mod. Power Syst. Clean Energy* **2018**, *6*, 181–189. [CrossRef]
115. Golshannavaz, S.; Aminifar, F.; Nazarpour, D. Application of UPFC to enhancing oscillatory response of series-compensated wind farm integrations. *IEEE Trans. Smart Grid* **2014**, *5*, 1961–1968. [CrossRef]
116. Alharbi, Y.M.; Siada, A.A.; Abdou, A.F. Application of UPFC on stabilizing torsional oscillations and improving transient stability. In Proceedings of the 2013 Australasian Universities Power Engineering Conference (AUPEC), Hobart, Australia, 29 September–3 October 2013; pp. 1–4.
117. Moharana, A.; Varma, R.K.; Seethapathy, R. SSR alleviation by STATCOM in induction-generator-based wind farm connected to series compensated line. *IEEE Trans. Sustain. Energy* **2014**, *5*, 947–957. [CrossRef]
118. Wang, S.; Lu, S.; Xiao, H.; Xu, Z.; Cui, X.; Wu, X. SSO suppression method and effectiveness of STATCOM in an identical multi-machine system. *J. Eng.* **2017**, *2017*, 1483–1487. [CrossRef]
119. Yang, F.; Xiao, X.; Zhang, J. Mechanism analysis and simulation for STATCOM damping subsynchronous oscillation. In Proceedings of the 2011 International Conference on Electrical and Control Engineering, Yichang, China, 16–18 September 2011; pp. 3978–3981.
120. Gotmare, G.V.; Virulkar, V.B. Remote signal STATCOM controller for mitigation of sub-synchronous resonance in series compensated type 3 wind farm. In Proceedings of the 2017 International Conference on Energy, Communication, Data Analytics and Soft Computing (ICECDS), Chennai, India, 1–2 August 2017; pp. 1989–1995.
121. Xi, W.; Ping, J.; Bolin, C.; Huachuan, X. Mitigation of sub-synchronous oscillation caused by TCSC using supplementary excitation damping controller. In Proceedings of the 2011 International Conference on Electrical Machines and Systems, Beijing, China, 20–23 August 2011; pp. 1–5.
122. Xu, Y.; Bai, W.; Zhao, S.; Zhang, J.; Zhao, Y. Mitigation of forced oscillations using VSC-HVDC supplementary damping control. *Electr. Power Syst. Res.* **2020**, *184*, 106333. [CrossRef]
123. Guo, C.L.; Xu, J.T.; Zhao, Y.; Xiao, X.N. A research on suppression of SSO based on the real time digital simulation. In *Advanced Materials Research*; Trans Tech Publications Ltd.: Stafa-Zuerich, Switzerland, 2013; Volume 732, pp. 1415–1419.
124. Zang, D.; Zhao, X.; Gao, S.; Liu, Y.; Zou, Z.; Wu, X. Suppression of Multi-machine Subsynchronous Oscillation Based on Generalized Phase Compensation Method. In Proceedings of the 2019 IEEE Power & Energy Society General Meeting (PESGM), Atlanta, GA, USA, 4–8 August 2019; pp. 1–6.
125. Gao, B.; Xiao, X.; Zhao, C.; Zhao, Y. Using SVC for SSO Damping and Its Side-effects on the AC System. In Proceedings of the 2010 Asia-Pacific Power and Energy Engineering Conference, Chengdu, China, 28–31 March 2010; pp. 1–4.
126. Varma, R.K.; Auddy, S. Mitigation of subsynchronous resonance by SVC using PMU-acquired remote generator speed. In Proceedings of the 2006 IEEE Power India Conference, New Delhi, India, 10–12 April 2006. p. 8.
127. Xi, G.; Guo, C.; Zhang, J.; Yang, L.; Xiao, X. Mitigation of subsynchronous oscillation in Hulun Buir power plant with SVC. In Proceedings of the International Conference on Sustainable Power Generation and Supply (SUPERGEN 2012), Hangzhou, China, 8–9 September 2012.
128. Xie, X.; Jiang, Q.; Han, Y. Damping multimodal subsynchronous resonance using a static var compensator controller optimized by genetic algorithm and simulated annealing. *Eur. Trans. Electr. Power* **2012**, *22*, 1191–1204. [CrossRef]
129. Nannam, H.; Reddy, P.L. Mitigation of Sub Synchronous Oscillations in Power System with Static Synchronous Series Compensator Using Fuzzy Logic Controller. *Int. J. Appl. Eng. Res.* **2014**, *9*, 5233–5248.
130. Farahani, M. Damping of subsynchronous oscillations in power system using static synchronous series compensator. *IET Gener. Transm. Distrib.* **2012**, *6*, 539–544. [CrossRef]
131. Leon, A.E.; Amodeo, S.; Mauricio, J.M. Enhanced Compensation Filter to Mitigate Subsynchronous Oscillations in Series-Compensated DFIG-Based Wind Farms. *IEEE Trans. Power Deliv.* **2021**, *36*, 3805–3814. [CrossRef]
132. Shair, J.; Xie, X.; Yuan, L.; Wang, Y.; Luo, Y. Monitoring of subsynchronous oscillation in a series-compensated wind power system using an adaptive extended Kalman filter. *IET Renew. Power Gener.* **2021**, *14*, 4193–4203. [CrossRef]
133. Venkateswarlu, S.; Janaki, M.; Thirumalaivasan, R. Analysis and mitigation of SSR in non-identical generators using multimodal BPF based SSDC. *ISA Trans.* **2022**, *120*, 247–257. [CrossRef]
134. Wang, S.; Xu, Z.; Wang, S. New findings on bypass damping filter in increasing subsynchronous resonance damping of series compensated system. *IET Gener. Transm. Distrib.* **2015**, *9*, 1718–1726. [CrossRef]
135. Liu, H.; Xie, X.; Li, Y.; Liu, H.; Hu, Y. Mitigation of SSR by embedding subsynchronous notch filters into DFIG converter controllers. *IET Gener. Transm. Distrib.* **2017**, *11*, 2888–2896. [CrossRef]
136. Rajaram, T.; Reddy, J.M.; Xu, Y. Kalman filter-based detection and mitigation of subsynchronous resonance with SSSC. *IEEE Trans. Power Syst.* **2016**, *32*, 1400–1409.
137. Huang, P.H.; El Moursi, M.S.; Xiao, W.; Kirtley, J.L. Subsynchronous resonance mitigation for series-compensated DFIG-based wind farm by using two-degree-of-freedom control strategy. *IEEE Trans. Power Syst.* **2014**, *30*, 1442–1454. [CrossRef]
138. Harnefors, L. Analysis of subsynchronous torsional interaction with power electronic converters. *IEEE Trans. Power Syst.* **2007**, *22*, 305–313. [CrossRef]

139. Alawasa, K.M.; Mohamed, Y.A.R.I.; Xu, W. Active mitigation of subsynchronous interactions between PWM voltage-source converters and power networks. *IEEE Trans. Power Electron.* **2013**, *29*, 121–134. [CrossRef]
140. Chen, A.; Xie, D.; Zhang, D.; Gu, C.; Wang, K. PI parameter tuning of converters for sub-synchronous interactions existing in grid-connected DFIG wind turbines. *IEEE Trans. Power Electron.* **2018**, *34*, 6345–6355. [CrossRef]
141. Bi, T.; Li, J.; Zhang, P.; Mitchell-Colgan, E.; Xiao, S. Study on response characteristics of grid-side converter controller of PMSG to sub-synchronous frequency component. *IET Renew. Power Gener.* **2017**, *11*, 966–972. [CrossRef]
142. De Toledo, P.F.; Angquist, L.; Nee, H.P. Frequency-domain modelling of sub-synchronous torsional interaction of synchronous machines and a high voltage direct current transmission link with line-commutated converters. *IET Gener. Transm. Distrib.* **2010**, *4*, 418–431. [CrossRef]
143. Zuo, J.; Li, Y.; Shi, D.; Duan, X. Simultaneous robust coordinated damping control of power system stabilizers (PSSs), static var compensator (SVC) and doubly-fed induction generator power oscillation dampers (DFIG PODs) in multimachine power systems. *Energies* **2017**, *10*, 565. [CrossRef]
144. Zhu, L.; Zhong, D.; Wang, B.; Lin, R.; Xu, M. Understanding Subsynchronous Oscillation in DFIG-Based Wind Farms with Rotor-Side Converter Control Based on the Equivalent RLC Model. *IEEE Access* **2020**, *8*, 65371–65382. [CrossRef]
145. Li, P.; Wang, J.; Xiong, L.; Huang, S.; Ma, M.; Wang, Z. Energy-Shaping Controller for DFIG-Based Wind Farm to Mitigate Subsynchronous Control Interaction. *IEEE Trans. Power Syst.* **2020**, *36*, 2975–2991. [CrossRef]
146. Khazaie, J.; Mokhtari, M.; Khalilyan, M.; Nazarpour, D. Sub-synchronous resonance damping using distributed static series compensator (DSSC) enhanced with fuzzy logic controller. *Int. J. Electr. Power Energy Syst.* **2012**, *43*, 80–89. [CrossRef]
147. Li, P.; Xiong, L.; Wu, F.; Ma, M.; Wang, J. Sliding mode controller based on feedback linearization for damping of sub-synchronous control interaction in DFIG-based wind power plants. *Int. J. Electr. Power Energy Syst.* **2019**, *107*, 239–250. [CrossRef]
148. Carpanen, R.P.; Rigby, B.S. A FACTS-based power flow controller model for the IEEE SSR first benchmark model. In Proceedings of the 2007 IEEE Power Engineering Society Conference and Exposition in Africa-Power Africa, Johannesburg, South Africa, 16–20 July 2007; pp. 1–8.
149. Kucukefe, Y.; Kaypmaz, A. Hopf bifurcations in the IEEE Second Benchmark Model for SSR studies. In Proceedings of the 16th Power Systems Computations Conference, Glasgow, Scotland, 14–18 July 2008; pp. 14–18.
150. Harb, A.M.; Omari, M.M. Bifurcation and chaos theory as applied to SSR of the IEEE second benchmark model (system# 2) with the presence of the damper windings. *Int. J. Model. Simul.* **2009**, *29*, 62–70.
151. Radaideh, S.M.; Widyan, M.S.; Al-Rahamneh, O.I. Controlling SSR of the IEEE Second Benchmark Model Using TCSC and SSSC: A Comparative study. *Int. J. Model. Simul.* **2011**, *31*, 218–226. [CrossRef]
152. Xie, H.; Li, B.; Heyman, C.; De Oliveira, M.M.; Monge, M. Subsynchronous resonance characteristics in presence of doubly-fed induction generator and series compensation and mitigation of subsynchronous resonance by proper control of series capacitor. *IET Renew. Power Gener.* **2014**, *8*, 411–421. [CrossRef]
153. Rai, D.; Faried, S.O.; Ramakrishna, G.; Edris, A. Hybrid series compensation scheme capable of damping subsynchronous resonance. *IET Gener. Transm. Distrib.* **2010**, *4*, 456–466. [CrossRef]
154. Boopathi, V.P.; Muzamil Ahamed, R.; Kumudini Devi, R.P.; Ramanujam, R. Analysis and mitigation of subsynchronous oscillations in a radially-connected wind farm. In Proceedings of the 2014 Power and Energy Systems: Towards Sustainable Energy, Bangalore, India, 13–15 March 2014.
155. Yao, J.; Wang, X.; Li, J.; Liu, R.; Zhang, H. Sub-synchronous resonance damping control for series-compensated DFIG-based wind farm with improved particle swarm optimization algorithm. *IEEE Trans. Energy Convers.* **2018**, *34*, 849–859. [CrossRef]
156. Moharana, A.; Varma, R.K. Subsynchronous resonance in single-cage self-excited-induction-generator-based wind farm connected to series-compensated lines. *IET Gener. Transm. Distrib.* **2011**, *5*, 1221–1232. [CrossRef]
157. Shair, J.; Xie, X.; Li, Y.; Terzija, V. Hardware-in-the-loop and field validation of a rotor-side subsynchronous damping controller for a series compensated DFIG system. *IEEE Trans. Power Deliv.* **2020**, *36*, 698–709. [CrossRef]
158. Livermore, L.; Ugalde-Loo, C.E.; Mu, Q.; Liang, J.; Ekanayake, J.B.; Jenkins, N. Damping of subsynchronous resonance using a voltage source converter-based high-voltage direct-current link in a series-compensated Great Britain transmission network. *IET Gener. Transm. Distrib.* **2014**, *8*, 542–551. [CrossRef]
159. Leon, A.E. Integration of DFIG-based wind farms into series-compensated transmission systems. *IEEE Trans. Sustain. Energy* **2015**, *7*, 451–460. [CrossRef]
160. Rai, D.; Faried, S.O.; Ramakrishna, G.; Edris, A.A. An SSSC-based hybrid series compensation scheme capable of damping subsynchronous resonance. *IEEE Trans. Power Deliv.* **2011**, *27*, 531–540. [CrossRef]
161. Sedighizadeh, M.; Esmaili, M.; Parvaneh, H. Coordinated optimization and control of SFCL and SMES for mitigation of SSR using HBB-BC algorithm in a fuzzy framework. *J. Energy Storage* **2018**, *18*, 498–508. [CrossRef]
162. Learned, L. *Sub-Synchronous Interaction between Series-Compensated Transmission Lines and Generation*; NERC: Atlanta, GA, USA, 2011.
163. Ali, M.T.; Zhou, D.; Song, Y.; Ghandhari, M.; Harnefors, L.; Blaabjerg, F. Analysis and Mitigation of SSCI in DFIG Systems with Experimental Validation. *IEEE Trans. Energy Convers.* **2019**, *35*, 714–723. [CrossRef]
164. Narendra, K.; Fedirchuk, D.; Midence, R.; Zhang, N.; Mulawarman, A.; Mysore, P.; Sood, V. New microprocessor-based relay to monitor and protect power systems against sub-harmonics. In Proceedings of the 2011 IEEE Electrical Power and Energy Conference, Winnipeg, MB, Canada, 3–5 October 2011; pp. 438–443.

165. Ugalde-Loo, C.E.; Ekanayake, J.B.; Jenkins, N. Subsynchronous resonance in a series-compensated Great Britain transmission network. *IET Gener. Transm. Distrib.* **2013**, *7*, 209–217. [CrossRef]
166. Pahlavani, M.R.A.; Mohammadpour, H.A. Damping of sub-synchronous resonance and low-frequency power oscillation in a series-compensated transmission line using gate-controlled series capacitor. *Electr. Power Syst. Res.* **2011**, *81*, 308–317. [CrossRef]
167. Moharana, A.; Varma, R.K.; Seethapathy, R. Modal analysis of Type-1 wind farm connected to series compensated transmission line and LCC HVDC transmission line. In Proceedings of the 2012 IEEE Electrical Power and Energy Conference, London, ON, Canada, 10–12 October 2012; pp. 202–209.
168. Moharana, A.; Varma, R.K.; Seethapathy, R. Modal analysis of induction generator-based wind farm connected to series-compensated transmission line and line commutated converter high-voltage DC transmission line. *Electr. Power Compon. Syst.* **2014**, *42*, 612–628. [CrossRef]
169. Irwin, G.D.; Jindal, A.K.; Isaacs, A.L. Sub-synchronous control interactions between type 3 wind turbines and series compensated AC transmission systems. In Proceedings of the 2011 IEEE Power and Energy Society General Meeting, Detroit, MI, USA, 24–28 July 2011; pp. 1–6.
170. Wu, Y.; Liao, K.; Xiao, X.; Luo, C. Impact of Shunt reactor to DFIG Connected to Series-Compensated Power System on Sub-synchronous Oscillation Characteristics. *MATEC Web Conf.* **2018**, *173*, 02030. [CrossRef]
171. Tang, Y.; Yu, R.Q. Impacts of large-scale wind power integration on subsynchronous resonance. In Proceedings of the 2011 Asia-Pacific Power and Energy Engineering Conference, Wuhan, China, 25–28 March 2011; pp. 1–4.
172. Zhu, C.; Hu, M.; Wu, Z. Parameters impact on the performance of a double-fed induction generator-based wind turbine for subsynchronous resonance control. *IET Renew. Power Gener.* **2012**, *6*, 92–98. [CrossRef]
173. Liu, H.; Xie, X.; Zhang, C.; Li, Y.; Liu, H.; Hu, Y. Quantitative SSR analysis of series-compensated DFIG-based wind farms using aggregated RLC circuit model. *IEEE Trans. Power Syst.* **2016**, *32*, 474–483. [CrossRef]
174. Sarasúa, J.I.; Pérez-Díaz, J.I.; Wilhelmi, J.R.; Sánchez-Fernández, J.Á. Dynamic response and governor tuning of a long penstock pumped-storage hydropower plant equipped with a pump-turbine and a doubly fed induction generator. *Energy Convers. Manag.* **2015**, *106*, 151–164. [CrossRef]
175. Xu, B.; Chen, D.; Venkateshkumar, M.; Xiao, Y.; Yue, Y.; Xing, Y.; Li, P. Modeling a pumped storage hydropower integrated to a hybrid power system with solar-wind power and its stability analysis. *Appl. Energy* **2019**, *248*, 446–462. [CrossRef]
176. Yang, W.; Yang, J.; Zeng, W.; Tang, R.; Hou, L.; Ma, A.; Zhao, Z.; Peng, Y. Experimental investigation of theoretical stability regions for ultra-low frequency oscillations of hydropower generating systems. *Energy* **2019**, *186*, 115816. [CrossRef]
177. Helseth, A.; Gjelsvik, A.; Mo, B.; Linnet, Ú. A model for optimal scheduling of hydrothermal systems including pumped-storage and wind power. *IET Gener. Transm. Distrib.* **2013**, *7*, 1426–1434. [CrossRef]
178. Kanakasabapathy, P.; Swarup, K.S. Evolutionary tristate PSO for strategic bidding of pumped-storage hydroelectric plant. *IEEE Trans. Syst. Man Cybern. Part C Appl. Rev.* **2010**, *40*, 460–471. [CrossRef]
179. Dong, Z.; Tan, J.; St-Hilaire, A.; Muljadi, E.; Corbus, D.; Nelms, R.; Jacobson, M. Modelling and simulation of ternary pumped storage hydropower for power system studies. *IET Gener. Transm. Distrib.* **2019**, *13*, 4382–4390. [CrossRef]
180. Mukhammadiev, M.M.; Dzhuraev, K.S.; Klychev, I.S. Capabilities of hydroelectric pumped-storage stand-alone power plants. *Appl. Sol. Energy* **2013**, *49*, 267–271. [CrossRef]
181. Bakanos, P.I.; Katsifarakis, K.L. Optimal operation scheduling of multipurpose pumped storage hydro power plant with high penetration of renewable energy resources. In Proceedings of the Protection and Restoration of the Environment XIV 2018, Thessaloniki, Greece, 3–6 July 2018; pp. 3–6.
182. Vasil'ev, Y.S.; Elistratov, V.V.; Kudryasheva, I.G. Use of the Flexibility Characteristics of Hydroelectric Power Plants and Pumped-Storage Power Plants in a Power System with Renewable Energy Sources. *Power Technol. Eng.* **2019**, *53*, 294–299. [CrossRef]
183. Li, B.; Duan, Z.; Wang, X.; Wu, J. Loss-of-excitation analysis and protection for pumped-storage machines during starting. *IET Renew. Power Gener.* **2016**, *10*, 71–78. [CrossRef]
184. Desingu, K.; Selvaraj, R.; Chelliah, T.R.; Khare, D.; Joshi, L.P. Thermal loading of multi-megawatt medium-voltage power converters serving to variable speed large pumped storage units. In Proceedings of the 2018 IEEE International Conference on Power Electronics, Drives and Energy Systems (PEDES), Chennai, India, 18–21 December 2018; pp. 1–6.
185. Singh, R.R.; Chelliah, T.R. Energy saving start-up strategy of pumped storage power plant equipped with doubly-fed asynchronous machine. In Proceedings of the 2016 IEEE 1st International Conference on Power Electronics, Intelligent Control and Energy Systems (ICPEICES), Delhi, India, 4–6 July 2016; pp. 1–6.
186. Zhang, H.; Chen, D.; Xu, B.; Patelli, E.; Tolo, S. Dynamic analysis of a pumped-storage hydropower plant with random power load. *Mech. Syst. Signal Process.* **2018**, *100*, 524–533. [CrossRef]
187. Desingu, K.; Selvaraj, R.; Chelliah, T.R.; Khare, D. Effective utilization of parallel-connected megawatt three-level back-to-back power converters in variable speed pumped storage units. *IEEE Trans. Ind. Appl.* **2019**, *55*, 6414–6426. [CrossRef]
188. Selvaraj, R.; Chelliah, T.R.; Khare, D. A novel switching strategy for DC link voltage balance in parallel connected three-level diode clamped back-to-back converter systems serving to variable speed pumped storage plant. In Proceedings of the 2017 IEEE Transportation Electrification Conference (ITEC-India), Pune, India, 13–15 December 2017; pp. 1–6.

189. Carunaiselvane, C.; Chelliah, T.R.; Khare, D. Temperature distribution of 250 MW hydro turbine synchronous generator at continuous overloading conditions. In Proceedings of the 2018 IEEE International Conference on Power Electronics, Drives and Energy Systems (PEDES), Chennai, India, 18–21 December 2018; pp. 1–6.
190. Mohale, V.; Chelliah, T.R. Sub Synchronous Oscillation in Asynchronous Generators Serving to Wind and Hydro Power Systems—A Review. In Proceedings of the 2021 IEEE Industry Applications Society Annual Meeting (IAS), Vancouver, BC, Canada, 10–14 October 2021; pp. 1–7. [CrossRef]

Disclaimer/Publisher's Note: The statements, opinions and data contained in all publications are solely those of the individual author(s) and contributor(s) and not of MDPI and/or the editor(s). MDPI and/or the editor(s) disclaim responsibility for any injury to people or property resulting from any ideas, methods, instructions or products referred to in the content.