Supporting Information

Design Optimization and Carbon Footprint Analysis of an Electrodeionization System with Flexible Load Regulation

Yuan Yuan [1,†], Fengting Qian [1,†], Jiaqi Lu [1,*], Dungang Gu [1], Yuhang Lou [1], Na Xue [1], Guanghui Li [1,*], Wenjie Liao [2] and Nan Zhang [3]

[1] Innovation Centre for Environment and Resources, School of Chemistry and Chemical Engineering, Shanghai University of Engineering Science, No.333 Longteng Road, Songjiang District, Shanghai 201620, China

[2] Institute of New Energy and Low-Carbon Technology, Sichuan University, Chuanda Road, Shuangliu County, Chengdu 610207, China

[3] Centre for Process Integration, Department of Chemical Engineering and Analytical Science, The University of Manchester, Manchester M13 9PL, UK; nan.zhang@manchester.ac.uk

* Correspondence: wilsherelu@foxmail.com (J.L.); ghli@sues.edu.cn (G.L.); Tel.: +86-21-67795965 (J.L. & G.L.)

† These authors contributed equally to this work.

Table of contents

Section S1. The principle of EDI
Section S2. Basic information of E-CELL MK 2 EDI module
Section S3. Modeling of EDI module
Section S4. Sensitivity analysis
Section S5. Inventory list data of 20 m^3/h EDI system composed of large modules
Section S6. Inventory list data of 20 m^3/h EDI system composed of small modules
Section S7. Inventory list data of 20 m^3/h, 15 m^3/h and 10 m^3/h EDI system composed of large and small modules
Section S8. Inventory list data 5 m^3/h EDI system composed of large and small modules
Section S9. Background data of EDI module raw materials and waste management.
Section S11. Life cycle assessment of the EDI systems

Reference

List of figures

Figure S1. Diagram of EDI principle

Figure S2. Finite element grid diagram of EDI dilute chamber

Figure S3. Sensitivity analysis of membrane area

List of tables

Table S1. Parameters of E-CELL MK 2 module

Table S2. Quality data of E-CELL MK 2 module

Table S3. Sensitivity analysis of boiler make-up water demand

Table S4. Sensitivity analysis of membrane area

Table S5. The quality data of a large flow module

Table S6. The number of modules and dilute chambers of EDI system

Table S7. The quality data of a module with 24 dilute chambers

Table S8. The quality data of a module with 21 dilute chambers

Table S9. The quality data of a module with 19 dilute chambers

Table S10. The quality data of a module with 17 dilute chambers

Table S11. The quality data of a module with 16 dilute chambers

Table S12. The quality data of a large flow module and a small flow module

Table S13. The quality data of a large flow module and a small flow module in 5 m^3/h system

Table S14. The background of EDI modules raw materials

Table S15. The background of EDI modules waste management

Table S16. Parameters of life cycle assessment on EDI system

Section S1. Principle of EDI

The principle of UPW preparation process by EDI is shown in Figure S1.

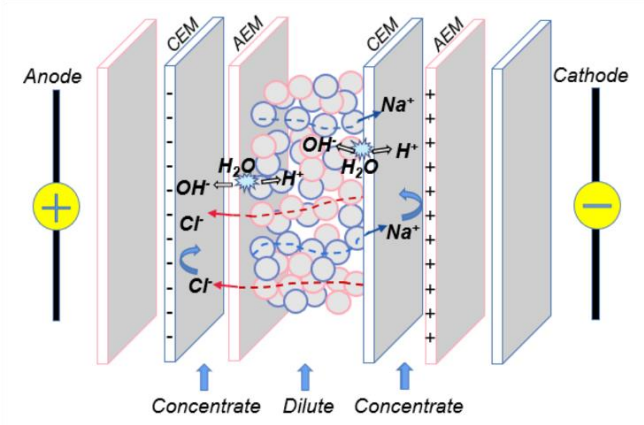

Figure S1. Diagram of EDI principle

Section S2. Basic information of E-CELL MK 2 EDI module

Optimization of the EDI system in this study is based on the E-CELL MK 2 EDI module on the market. The basic information of this module is shown in Table S1.

Table S1. Parameters of E-CELL MK 2 module

Parameters	
Operation weight	80 kg
Membrane area	507 cm^2
Membrane thickness	0.42 mm
Exchange membrane length (flow direction)	39 cm
Exchange membrane width	13 cm
Width of dilute chamber	0.8 cm
Number of dilute chamber	36
Number of concentrate chamber	37

The quality of ion exchange membranes, ion exchange resins and electrode of module could be estimated according to the module parameters, and deduced from the operation weight. The remaining quality is counted as the quality of the module shell and accessories (clamping plates, screws, etc.). The quality of each part of the module is shown in Table S2.

Table S2. Quality data of E-CELL MK 2 module

Materials	Weight/kg
Cation exchange membrane	2.38
Anion exchange membrane	2.88
Cation exchange resin	7.88

Anion exchange resin	9.2
Titanium coated ruthenium electrode	6.31
Stainless steel electrode	11.1
Shell and accessories of module	40.23

Section S3. Modeling of EDI module

The process model of UPW preparation by EDI was established according to the mass transfer mechanism. A finite element model was applied to represent the dilute chamber as M×N elements. The M direction is along the current direction, and the N direction is the flow direction. Each small element forms a mass conservation relationship with the ions between its surrounding cells.

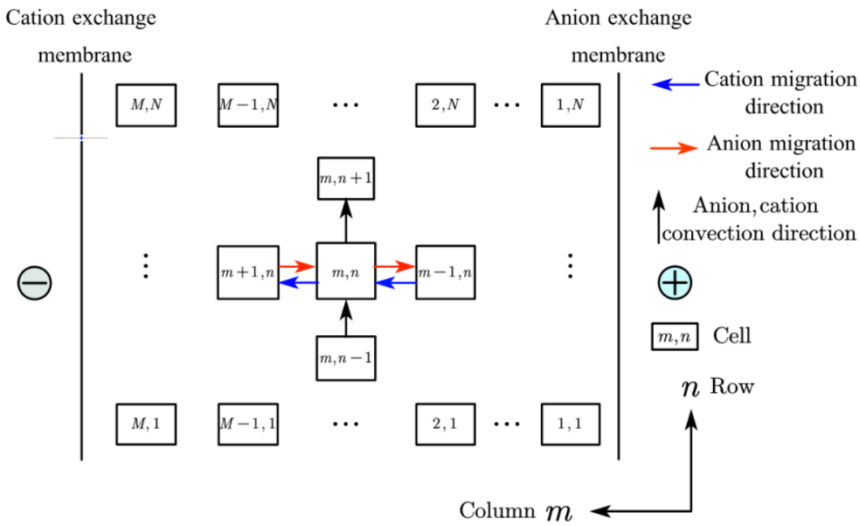

Figure S2. Finite element grid diagram of EDI dilute chamber

The conservation of mass among the elements in the process model of EDI follows Equations S(1) and S(2). And the detailed model of the EDI process is presented in our previously published paper (S1).

$$F_C C_i(i,m,n-1)+\frac{t_i(i,m-1,n)I_{\text{line}}(n)}{96485.3\times Z_i(i)}=F_C C_i(i,m,n)+\frac{t_i(i,m,n)I_{\text{line}}(n)}{96485.3\times Z_i(i)} \tag{1}$$

$$F_C C_j(j,m,n-1)+\frac{t_j(j,m-1,n)I_{\text{line}}(n)}{96485.3\times Zj(j)}=F_C C_j(j,m,n)+\frac{t_j(j,m,n)I_{\text{line}}(n)}{96485.3\times Z_j(j)} \tag{2}$$

Section S4. Sensitivity analysis of membrane areas

The sensitivity analysis of boiler make-up water demand and membrane area were carried out. And

the sensitivity of boiler make-up water demand is shown in Table S3.

Table S3. Sensitivity analysis of boiler make-up water demand

UPW Demand (m^3/h)	17	18	19	20	21	22
I(A)	1.711	1.712	1.745	1.793	1.866	1.944
A(cm^2)	600	600	600	600	600	600
w(cm)	0.6	0.6	0.6	0.6	0.6	0.6
d(cm)	14.6	14.6	14.6	14.6	14.6	14.6
L(cm)	41	41	41	41	41	41
Inflow (m^3/h)	3.4	3.6	3.8	4	4.2	4.4
N_d	38	38	38	38	38	38
N_c	39	39	39	39	39	39
Power consumption（kWh/MT UPW）	0.071	0.067	0.066	0.067	0.069	0.071
Annual cost（¥/y）	9382.4	9419.1	9680.7	10100.2	10641.9	11286.3

The sensitivity analysis results of membrane area are shown in Table S4 and Figure S2.

Table S4. Sensitivity analysis of membrane area

UPW Demand (m^3/h)	20	20	20	20	20
I (A)	1.943	1.866	1.793	1.739	1.686
A (cm^2)	560	580	600	620	640
Power consumption (kWh/MT UPW)	0.083	0.074	0.067	0.061	0.056
Annual cost (¥/y)	11587.6	10766.2	10100.2	9554.8	9104.0

The sensitivity analysis of membrane area shows that for the same boiler make-up water demand, the increase of membrane area can reduce the operating current, so as to reduce the power consumption of MT UPW produced and reduce the annual cost.

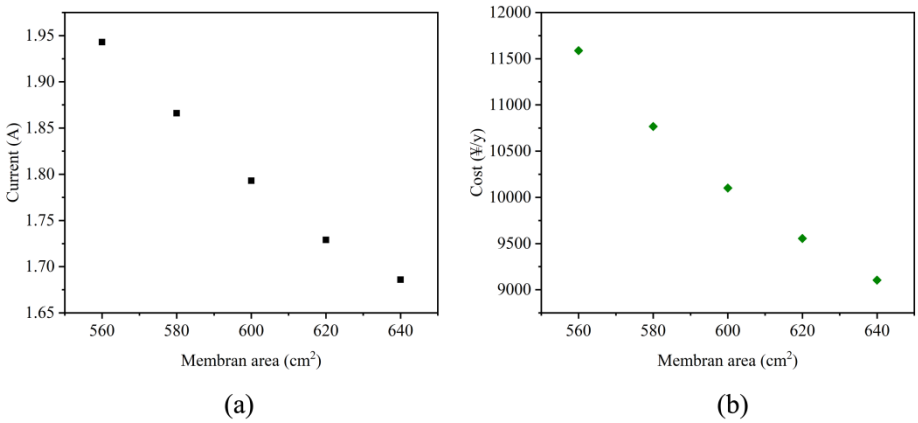

Figure S3. Sensitivity analysis of membrane area: (a) current; (b) cost

Section S5. Inventory list data of 20 m^3/h EDI system composed of large modules

After the optimization of the 20 m^3/h EDI system composed of 5 large flow modules, the membrane area of a module is 600 cm^2, the width of the dilute chamber is 0.6 cm, and the number of dilute chambers is 38. Therefore, the quality data of a large flow module is shown in Table S5.

Table S5. The quality data of a large flow module

Materials	Weight/kg
Cation exchange membrane	2.51
Anion exchange membrane	3.57
Cation exchange resin	6.24
Anion exchange resin	7.28
Titanium coated ruthenium electrode	6.31
Stainless steel electrode	11.1
Shell and accessories of module	42.99
Power consumption	10706.8 kWh

The calculation of shell and accessories is the same as S1.

Section S6. Inventory list data of 20 m^3/h EDI system composed of small modules

After the optimization of the 20 m^3/h EDI system composed of small flow modules, the membrane area of a module is 600 cm^2, the width of the dilute chamber is 0.6 cm. The numbers of small flow modules are 8-13, and the number of dilute chambers varies with the number of modules, as shown in Table S6.

Table S6. The number of modules and dilute chambers of EDI system

Number of modules	Number of dilute chambers
8	24
9	21
10	19
11	17
12	16
13	16

The quality data of small flow modules with different dilute chambers are shown in Table S7-S11.

Table S7. The quality data of a module with 24 dilute chambers

Materials	Weight/kg
Cation exchange membrane	1.58
Anion exchange membrane	2.26
Cation exchange resin	4.61
Anion exchange resin	3.94
Titanium coated ruthenium electrode	6.31
Stainless steel electrode	11.1
Shell and accessories of module	27.15
Power consumption	10798.6 kWh

Table S8. The quality data of a module with 21 dilute chambers

Materials	Weight/kg
Cation exchange membrane	1.39
Anion exchange membrane	1.97
Cation exchange resin	4.03
Anion exchange resin	3.44
Titanium coated ruthenium electrode	6.31
Stainless steel electrode	11.1
Shell and accessories of module	23.75
Power consumption	10829.1 kWh

Table S9. The quality data of a module with 19 dilute chambers

Materials	Weight/kg
Cation exchange membrane	1.25
Anion exchange membrane	1.79
Cation exchange resin	3.65
Anion exchange resin	3.12
Titanium coated ruthenium electrode	6.31
Stainless steel electrode	11.1
Power consumption	10859.7 kWh

Table S10. The quality data of a module with 17 dilute chambers

Materials	Weight/kg
Cation exchange membrane	1.12
Anion exchange membrane	1.60
Cation exchange resin	3.26
Anion exchange resin	2.79

Titanium coated ruthenium electrode	6.31
Stainless steel electrode	11.1
Shell and accessories of module	19.23
Power consumption	10890.3 kWh

Table S11. The quality data of a module with 16 dilute chambers

Materials	Weight/kg
Cation exchange membrane	1.06
Anion exchange membrane	1.50
Cation exchange resin	3.07
Anion exchange resin	2.62
Titanium coated ruthenium electrode	6.31
Stainless steel electrode	11.1
Shell and accessories of module	18.1
Power consumption	10907.1 kWh

Since the membrane area and the width of dilute chamber are the same, there is a proportional relationship between the quality of the module shell and accessories and the number of dilute chambers. The quality of shell and accessories of modules is converted from the quality of shell and accessories in Section S2 according to the proportion between the dilute chambers and the module quality.

Section S7. Inventory list data of 20 m^3/h, 15 m^3/h and 10 m^3/h EDI system composed of large and small flow modules

When the 20 m^3/h EDI system is composed of large and small flow modules , the optimal design for power consumption and cost is the combination of 4 large flow module with 42 dilute chambers and 1 small flow module with 24 dilute chambers. The optimal design of 15 m^3/h is the combination of 3 large modules and 1 small flow module. And the optimal design of 10 m^3/h system is the combination of 2 large flow modules with 42 dilute chamber and 1 small flow module. The large flow modules and small flow modules in these systems are same. The quality data of a large flow module with 42 dilute chamber and a small flow module with 24 dilute chambers are shown in Table S12.

Table S12. The quality data of a large flow module and a small flow module

Materials	Weight/kg

	Large flow module	Small flow module
Cation exchange membrane	2.77	1.58
Anion exchange membrane	3.95	2.26
Cation exchange resin	8.06	4.61
Anion exchange resin	6.89	3.94
Titanium coated ruthenium electrode	6.31	6.31
Stainless steel electrode	11.1	11.1
Shell and accessories of module	47.25	23.75
Power Consumption	10681.8 kWh (20 m^3/h) 7957.8 kWh (15 m^3/h) 5463.0 kWh (10 m^3/h)	

Section S8. Inventory list data of 5 m^3/h EDI system composed of large and small modules

When the flow rate of the EDI system drops to 5 m^3/h, the optimal design for power consumption is the combination of 1 large flow module with 34 dilute chambers and 1 small flow module with 16 dilute chambers. The quality data of a large flow module and a small flow module in the system is shown in Table S13.

Table S13. The quality data of a large flow module and a small flow module in 5 m^3/h system

Materials	Weight/kg	
	Large flow module	Small flow module
Cation exchange membrane	2.24	1.06
Anion exchange membrane	3.20	1.50
Cation exchange resin	6.53	3.07
Anion exchange resin	5.58	2.62
Titanium coated ruthenium electrode	6.31	6.31
Stainless steel electrode	11.1	11.1
Shell and accessories of module	38.46	18.1
Power Consumption	2673.4 kWh	

When the EDI system composed of large modules, the large modules with 42 dilute chambers are used. And the inventory list data is same as in the Table S11.

Section S9. Background data of EDI module raw materials and waste management.

Most of the background data on the raw material production and waste management of the EDI module were obtained from the Ecoinvent database, and the data that are unavailable in the database are converted or derived from literature. The background data sources are shown in Table S14 and Table

S15.

Table S14. The background data source of EDI modules raw material

Materials	Value kg CO_2-eq/kg	Data source
Cation exchange membrane	1.64	Conversion according to the content of cation exchange resin and adhesive
Anion exchange membrane	2.94	Conversion according to the content of anion exchange resin and adhesive
PE (adhesive)	2.24	Ecoinvent database
Cation exchange resin	2.75	Ecoinvent database
Anion exchange resin	3.35	Ecoinvent database
Titanium coated ruthenium electrode	13.58	Calculated according to literature (S2)
Stainless steel electrode	4.16	Ecoinvent database
Shell and accessories of module	4.16	Ecoinvent database
Electricity in operation	1.03	Ecoinvent database

Incineration and landfill are the main waste management method at present (S3). Assumed the metal part of waste EDI module is treated by landfill, and the remaining parts are disposed by incineration.

Table S15. The background data source of EDI modules waste management

Materials	Value kg CO_2-eq/kg	Data source
Cation exchange membrane	1.30	Conversion according to the content of cation exchange resin and adhesive
Anion exchange membrane	1.56	Conversion according to the content of anion exchange resin and adhesive
PE (adhesive)	3.02	Ecoinvent database
Cation exchange resin	0.99	Ecoinvent database
Anion exchange resin	1.36	Ecoinvent database
Titanium coated ruthenium electrode	0.065	Ecoinvent database
Stainless steel electrode	0.065	Ecoinvent database
Shell and accessories of module	0.065	Ecoinvent database

Section S10. Life cycle assessment of EDI systems

According to the above inventory data, different EDI systems can be subject to an LCA study. The parameters for LCA are shown in Table S14.

Table S16. Parameters of life cycle assessment on EDI system

Parameters	Description

M_i (kg)	Quality of EDI module raw materials in systems
C_i (kg CO_2-eq/kg)	Cradle-to-gate greenhouse gas (GHG) emissions of EDI module raw materials
P (kWh)	Power consumption during the EDI system operation
C_p (kg CO_2-eq/kWh)	Cradle-to-gate GHG emissions of electricity
W_i (kg CO_2-eq/kg)	GHG emission of waste EDI module materials treatment
F (t/h)	Flow rate of EDI systems
H (h)	Annual operation time of EDI systems
L (year)	The life span of EDI modules

The annual operation time of EDI system is usually 8000 hours, and the lifespan of EDI modules is 5 years. The carbon footprint (kg CO_2-eq/t ultrapure water) of EDI systems could be calculated though Equation S(3).

$$CF = \frac{M_i \times C_i \times N + M_i \times W_i \times N + P \times C_p}{F \times H \times L} \tag{3}$$

Reference

(S1) J.L. Fengting Qian, Dungang Gu, Guanghui Li, Modeling and optimization of electrodeionization process for the energy saving of ultrapure water production, Journal of cleaner production, (2022).

(S2) PHILIP N, J E M. Life cycle assessment of metals: a scientific synthesis [J]. PloS one, 2014, 9(7).

(S2) Havukainen, J. 1, Zhan, M. 2, Dong, J. 2, Liikanen, M. 1, Deviatkin, I. 1, Environmental impact assessment of municipal solid waste management incorporating mechanical treatment of waste and incineration in Hangzhou, China, Journal of Cleaner Production, (2000).