forests

MDPI

Article

Development of Measuring Device for Diameter at Breast Height of Trees

Shangyang Li [1,2], Luming Fang [1,2,*], Yuanjing Sun [1,2], Lei Xia [3] and Xiongwei Lou [1,2]

[1] Key Laboratory of Forestry Intelligent Monitoring and Information Technology Research of Zhejiang Province, Zhejiang A & F University, Hangzhou 311300, China
[2] College of Mathematics and Computer Science, Zhejiang A & F University, Hangzhou 311300, China
[3] Longquan City Forestry Bureau, Longquan 323700, China
* Correspondence: fluming@126.com; Tel.: +86-18968156768

Abstract: Diameter at breast height (DBH) is the main metric for standing tree growth measurements. Developing fast and efficient measurement devices for measuring DBH is of great values in forest resource surveys. In this paper, we propose a new tree diameter measurement instrument developed using self-reset displacement sensor, which is equipped with a Personal Computer (PC) terminal to enable the measurement, transmission, storage, and analysis of tree diameters in one. The measurements showed an overall bias of 1.44% and an accuracy of 97.35% compared to the caliper, a conventional diameter measuring instrument. The overall bias was −0.52% compared to the diameter tape, and the measurement accuracy was 98.43%. Compared to the conventional devices, the proposed device is small and easy to carry, the measurement efficiency is significantly improved, and the measurement data can be directly derived for analysis. Compared with related electronic measuring instruments, this proposed device has the advantages of small volume, easy operation, large measurement range, and wider applicability.

Keywords: DBH; displacement sensor; integrated measurement

check for updates

Citation: Li, S.; Fang, L.; Sun, Y.; Xia, L.; Lou, X. Development of Measuring Device for Diameter at Breast Height of Trees. *Forests* **2023**, *14*, 192. https://doi.org/10.3390/f14020192

Received: 27 November 2022
Revised: 8 January 2023
Accepted: 17 January 2023
Published: 18 January 2023

Copyright: © 2023 by the authors. Licensee MDPI, Basel, Switzerland. This article is an open access article distributed under the terms and conditions of the Creative Commons Attribution (CC BY) license (https://creativecommons.org/licenses/by/4.0/).

1. Introduction

Diameter at breast height (DBH) of trees is an important indicator of forest ecological investigation and forest resource research, and how to accurately and efficiently obtain it has always been the demand of relevant investigators and researchers [1,2]. Traditional tree DBH measurement generally use a wheel ruler, diameter tape and caliper, and other tools for measurement [3,4]. The high labor intensity, high labor cost, error-prone and inefficient manual reading and recording of data throughout the measurement process severely limit the efficiency and quality of the related survey work. Improving the efficiency and quality of DBH data collection has become an important topic of forest ecology and forest resource digital research [5–7].

Following the advances in electronic devices, in recent years, scholars from various countries have attempted to measure the DBH of trees in various ways, with different results [8–12]. Ye et al. and Beland et al. used terrestrial laser scanning (TLS) to do ground laser scanning and used different methods to estimate the DBH of trees [13–18]. Cheng et al. extracted the DBH value of trees through laser spot combined with machine vision [19]. Wu and Zhou et al. used mobile phone photos to calculate the DBH value of trees based on monocular vision depth [20,21]. Yu and Zhao et al. used the total station to measure tree parameters by combining internal and external work [22,23]. He and Jia et al. used unmanned aerial vehicle (UAV) remote sensing images to estimate the DBH parameters of trees [24], etc. However, all the aforementioned devices require expertise and methods to process the obtained data, which are difficult to generalize and apply due to poor practicality and generality, high cost of use, inconvenience of carrying them. The MD II type electronic diameter gauge [25], U.S. RD 1000 type rapidity tree gauge, and Swedish

electronic tape gauge are expensive, complicated to operate, and require professional training. It would be thus difficult to promote their uses widely. Sun et al. developed an electronic caliper based on a capacitive sensor and the traditional caliper [26]. Yuan et al. developed a new three-section tree DBH measurement device based on an angle sensor [27]. However, these devices failed to perform well in dense forests and humid environments and did not fundamentally address the short range and poor portability of traditional calipers.

In view of the above-mentioned issues of the existing devices, in order to achieve fast and accurate measurements of standing tree DBH, and to satisfy the requirements of convenient portability and strong applicability, a new standing tree DBH measurement device based on self-reset displacement sensors and simple computational methods has been developed in this study. The device is highly operationally efficient, adaptable, easy to carry, and can meet different DBH measurements for various tree species. It is equipped with PC software to enable the integration of tree measurement, uploading, and storage of DBH to meet the needs of forest ecology and forest resource inventories.

2. Device and System Design

2.1. Electromechanical Structure Design

The main idea of the device is to make it more convenient and comfortable for forestry personnel to measure DBH in the forest. The mechanical structure of the new tree DBH measurement apparatus is shown in Figure 1, and consists mainly of a self-reset displacement sensor, two contacts, and a host box. The console consists of two parts, with an OLED display, membrane buttons, switches, charging, and data exchange interfaces on the exterior. It comes with a printed circuit board (PCB) motherboard, self-reset displacement sensor, lithium battery, etc. The two external contacts are detachable and can be disassembled and adjusted in non-working conditions. The size of the entire device was compared to the day-to-day usage specifications of mobile phones, and the measurement personnel felt positively, noting that it was easy to carry.

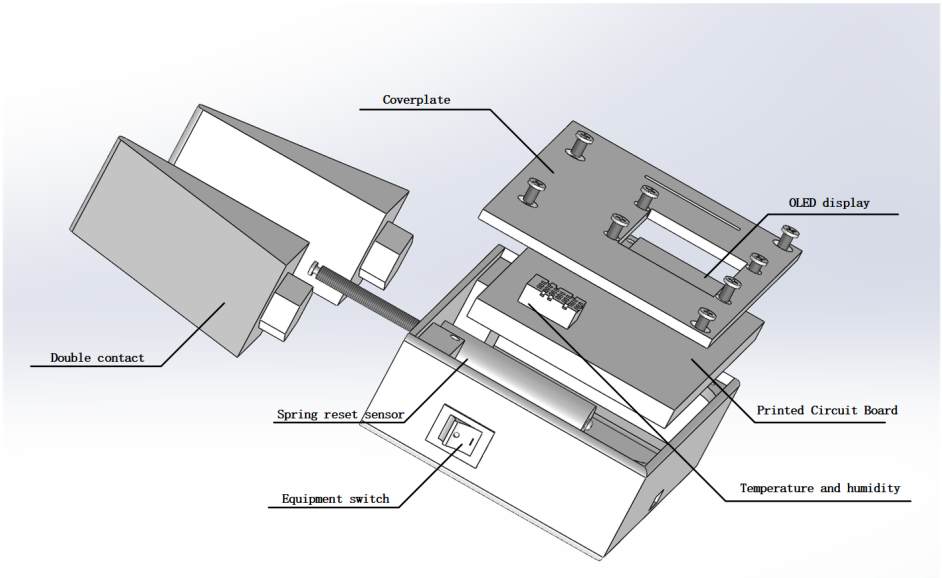

Figure 1. Mechanical structure diagram of the new standing wood DBH measuring instrument.

2.2. Circuit Design

Circuit design mainly starts from the complexity of the forest, taking into account the dark conditions of the forest and the variability of the environment. It must be ensured that the device has some waterproofing capability, but is also suitable for different temperature conditions, while additionally satisfying the collection of a large number of different tree measure factors. A schematic of the circuit structure of the device is shown in Figure 2,

which consists of the main control module, voltage transformer module, data input module, real-time interaction module, and other modules. The main control module is responsible for the overall control of the device and includes the processor STC15 series STC15W4K56S4 microcontroller. The memory comes with an SD card that can store data in real time to prevent data loss. Forestry investigators do not need to be distracted during measurements to record data, which can be recorded in real time and viewed whenever needed.

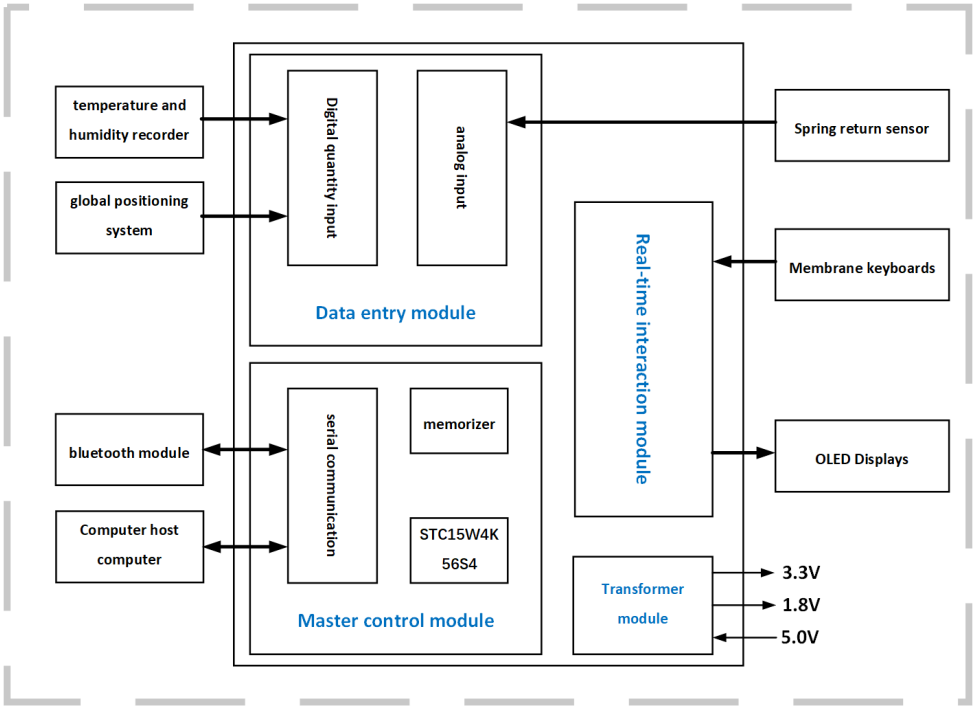

Figure 2. Frame diagram of the circuit structure.

When the survey is complete, the data can be uploaded directly to the computer by connecting the device to it. Forestry investigators no longer have to enter data manually to avoid making unnecessary errors. The serial communication module exchanges data with a PC via USB or enables data exchange with other electronic devices via Bluetooth. The data input module is mainly composed of different sensors, wherein the temperature and humidity sensor and positioning system are digital inputs that can be directly used, the input of the self-reset displacement sensor is analog, and we need to use the CS5513 chip to convert the analog model into a digital signal can be used. The voltage transformer module consists of a lithium battery, switch, charging port, and voltage transformer chip. It is used for power management of the input lithium battery, voltage fluctuation, and current protection of the circuit.

When conducting a survey in a dense forest, where darkness and poor light are inevitable, the device can see the data directly on the display without any worry. The real-time interaction module is to display all the detected data to the operator through the display, and we can select and use the functions displayed by pressing a key.

2.3. Software Design

The software exists for forestry personnel after a forest site survey, and the survey data can be clearly seen on a personal computer. The software of the lower computer device is designed in the C language of the Keil platform and consists mainly of four main functional plates: DBH measurements, temperature and humidity, GPS acquisition, key control, and master menu, which are used to implement various data and tree DBH readings. The host computer on the PC mainly implements communication functions and data storage and analysis. The software is developed and implemented in the software version 2022.2.4 of

Pycharm, based on version 3.8.10 of Python and version 5.15.4 of PyQt5, and the interface is shown in Figure 3. The data is connected to the computer via Bluetooth or serial port, and the data stored in the SD card is read to the computer via a pre-programmed code, enabling the integration of data measurement, storage, transmission, and analysis. The two are linked to each other, as shown in Figure 4, to enable the interaction of the whole data and the usage of the device [28].

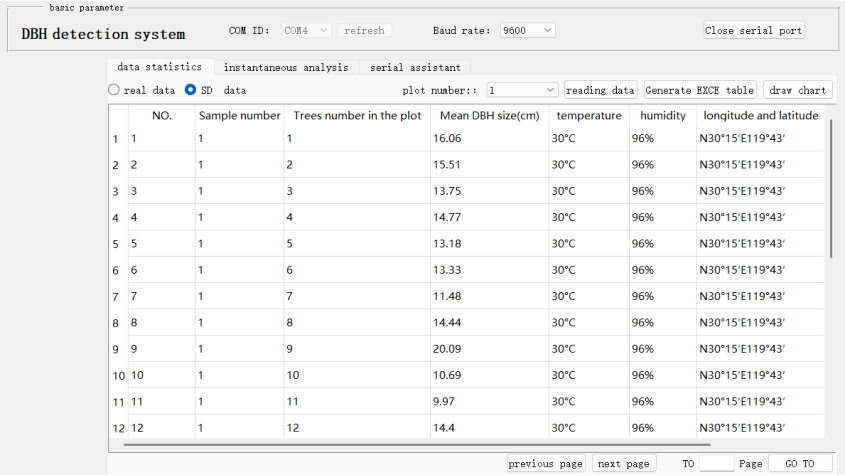

	NO.	Sample number	Trees number in the plot	Mean DBH size(cm)	temperature	humidity	longitude and latitude
1	1	1	1	16.06	30°C	96%	N30°15′E119°43′
2	2	1	2	15.51	30°C	96%	N30°15′E119°43′
3	3	1	3	13.75	30°C	96%	N30°15′E119°43′
4	4	1	4	14.77	30°C	96%	N30°15′E119°43′
5	5	1	5	13.18	30°C	96%	N30°15′E119°43′
6	6	1	6	13.33	30°C	96%	N30°15′E119°43′
7	7	1	7	11.48	30°C	96%	N30°15′E119°43′
8	8	1	8	14.44	30°C	96%	N30°15′E119°43′
9	9	1	9	20.09	30°C	96%	N30°15′E119°43′
10	10	1	10	10.69	30°C	96%	N30°15′E119°43′
11	11	1	11	9.97	30°C	96%	N30°15′E119°43′
12	12	1	12	14.4	30°C	96%	N30°15′E119°43′

Figure 3. Schematic diagram of the host computer interface.

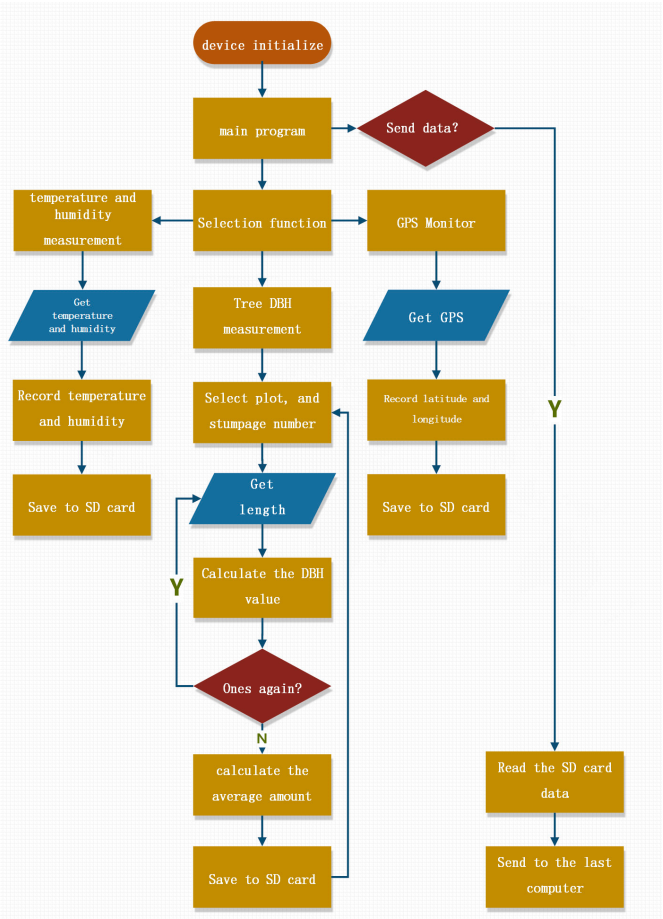

Figure 4. Software flow chart.

3. Design Principle

3.1. Principle of Displacement Measurement

Considering the complex environment of the forest, the sensor selection needs to be able to adapt to a variety of different environments. Self-reset displacement sensors, where the contact part can be displaced and the displacement can be automatically reset after the spring is installed, enable continuous and uninterrupted measurements. Its essence is the magnetic sensor [18,19], which can be divided into hinge series, pull rod series, and slider series according to the installation method. The sensor has high stability and accuracy. It can work normally at −30 °C~80 °C, has IP68 waterproof rating, and can adapt to daily life and various industrial production applications [29–31].

Figure 5 shows a schematic of the displacement length extraction. When the sensor is displaced, there is a positive linear correlation between the amount of displacement variation and the signal line output simulated signal variation. Through the CS5513 chip, the 20-bit conversion will sample the analog signal into the digital signal, which is finally sent to the microcontroller to extract the displacement length. According to the property that the output voltage and the displacement length in the self-reset displacement sensor are linearly dependent, the L_{now} is calculated in the following way as shown in Equation (1).

$$L_{now} = (L_{max} - L_{min}) \frac{V_{now}}{V_{max} - V_{min}} \quad (1)$$

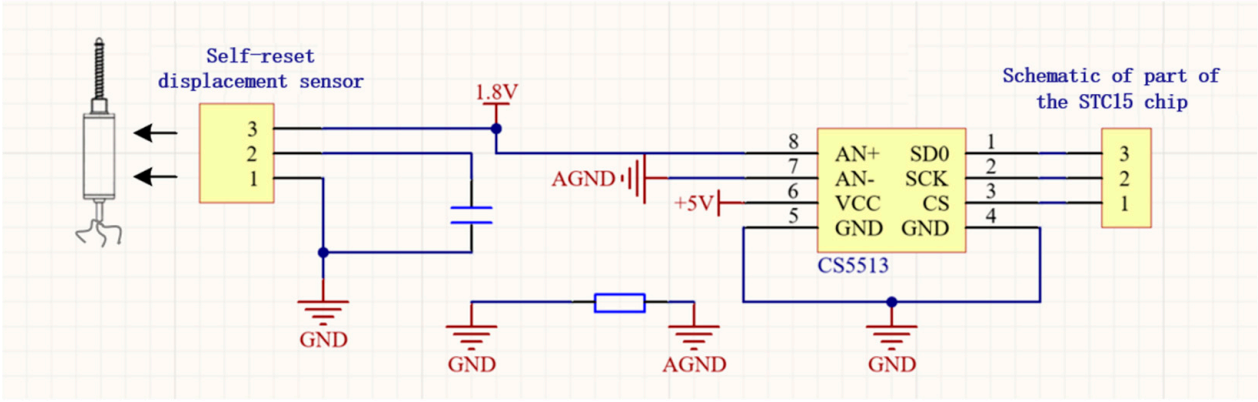

Figure 5. Displacement length extraction.

L_{now} is the desired displacement length; L_{max} is the displacement length; L_{min} is the minimum length of line segment displacement; V_{now} device real-time terminal voltage; V_{max} is the maximum voltage at both ends of the device common to the sensor; V_{min} is the minimum voltage at both ends of the device common to the sensor.

3.2. Calculation Method of DBH

When the device is used, the transverse section of the tree is approximately made into a circle to measure, the device is held in the hand vertically and laterally pushed to the tree to make the two contacts of the device fully touch the tree 1.3 m, as shown in Figure 6. In this case, the displacement sensor will be displaced, and L_{now} is the displacement length X calculated above. Let the distance between the plane in which the contacts are located and the position of the sensor be s_1. The radius r of the circle can be calculated using Equation (2) from the circular cutting law and the Pythagorean theorem.

$$(r - x)^2 + {s_1}^2 = r^2 \quad (2)$$

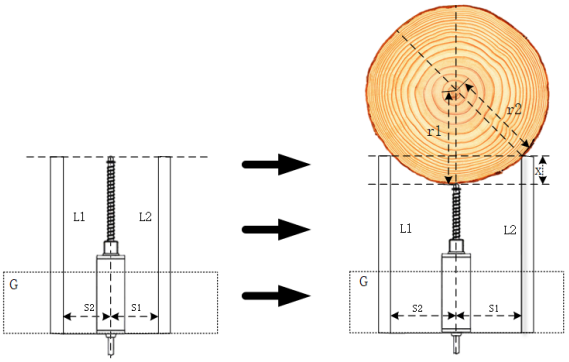

Figure 6. Schematic diagram of DBH measurement.

r is the diameter at the chest height of the tree to be measured; x is the displacement length of the device sensor; s_1 is the direct horizontal distance between the sensor and the contact.

Equation (3) can be obtained by further derivation:

$$r = \frac{{S_1}^2 + x^2}{2x} \tag{3}$$

Finally, the DBH size d (d is the DBH of the standing tree to be calculated) can be calculated by Equation (4):

$$d = 2r \tag{4}$$

3.3. Simulation Result

Simulation tests were performed on the device, varying the telescopic distance of the displacement sensor. When the distance between the sensor and the contact is different, the diameter at the height of the tree can be obtained, as shown in Table 1.

Table 1. DBH measured under different combinations.

Length of x	0.3 (cm)	0.6 (cm)	0.9 (cm)	1.2 (cm)	1.5 (cm)	1.8 (cm)	2 (cm)	2.4 (cm)	2.7 (cm)	3 (cm)
s_1 = 3 (cm)	30.3	15.6	10.9	8.70	7.5	6.8	6	6.15	6.03	6
s_1 = 6 (cm)	120.3	60.6	40.9	31.20	25.5	21.8	19	17.4	16.03	15

x is the expansion distance of the displacement sensor; s_1 is the direct distance between the contact and the displacement sensor.

4. Test and Analysis

4.1. Test Site and Subject

This experiment was mainly located in the Botanical Garden (30°15′ N, 119°43′ E) of the East Lake Campus of Zhejiang Agricultural and Forestry University, west of Hangzhou City, Zhejiang Province, with abundant tree species. The main tree species in this DBH measurement were Ginkgo biloba (T1), Magnolia grandiflora linn (T2), camphor tree (T3), Michelia alba (T4), Sycamphora (T5), Italian Yang (T6), Sapindus (T7), and Pine (T8), with a total of 301 trees. In this test, the diameter measuring ruler (three trees brand, stainless steel measuring ruler, range: 0~63.7 cm), diameter measuring caliper (Haglöf, folding caliper, range: 0~50 cm) and self-developed three-point standing tree DBH measuring instrument were used for an accuracy comparison test.

4.2. Measurement Flow Design

The DBH is measured according to the conventional operation using the traditional tape and the traditional caliper. When using a self-developed measuring device, if the DBH

of the tree is less than 6 cm, it can be read directly on the device scale. If the DBH of the tree is larger than 6 cm, follow the steps below.

Step 1: Open the side switch of the standing tree DBH measuring instrument, select the required functions by pressing the up and down keys, and press the A key to enter the selected functions;

Step 2: On the tree DBH measurement interface, you can adjust the measurement sample plot up and down, and select the tree number by left and right;

Step 3: When the height of the tree is 1.3 m, contact the device to the trunk as fully as possible, and press the "C" key to record the DBH of the tree, as shown in Figure 7. If the trunk is irregular, change the direction and press the "C" key to record the DBH for many times, and the device can automatically calculate the average DBH of the tree;



(**a**) Equipment (**b**) Caliper (**c**) tape

Figure 7. Field measurement map.

Step 4: After the DBH measurement of the tree is completed, connect the device to the computer, and the data can be uploaded to the PC software for statistics and analysis.

4.3. Measurement Results Evaluation Method

For the experimental data results, a caliper and tape were used as criteria to evaluate the accuracy of the device on the measured data. Equation (5) was used in the bias (*BIAS*) calculations to see how well the device measurements fit the data from the caliper and tape. The higher the goodness-of-fit between the data, caliper, and tape, the smaller the difference between the measured values of the devices and the caliper and tape. Relative bias (*relBIAS*) is the absolute deviation of a measurement as a percentage of the mean. The relative deviation calculated from Equation (6) was used to measure the deviation of a single measurement result from the mean. Root mean square error (*RMSE*) is the square root of the ratio between the square deviation of the predicted value and the true value and the number of observations Equation (7) was used to calculate the root mean square error to measure the deviation between the observed value and the true value. Equation (8) is used to calculate the relative Root Mean Square Error (*relRMSE*) to more intuitively show the difference in accuracy between the measured values of the equipment, caliper, and girder. Finally, the measurement data of the equipment is fitted linearly with a caliper and tape, and its decision coefficient R^2 can be obtained from Equation (9). The closer the value of R^2 is to 1, the higher the similarity between the two.

$$BIAS = \frac{\sum_{i=1}^{n}(dbh_i - DBH_i)}{n} \tag{5}$$

$$relBIAS = \frac{\sum_{i=1}^{n}\left(\frac{dbh_i}{DBH_i} - 1\right)}{n} \times 100\% \tag{6}$$

$$RMSE = \sqrt{\frac{\sum_{i=1}^{n}(dbh_i - DBH_i)^2}{n}} \tag{7}$$

$$\text{rel}RMSE = \sqrt{\frac{\sum_{i=1}^{n}\left(\frac{dbh_i}{DBH_i} - 1\right)^2}{n}} \times 100\% \tag{8}$$

$$R^2 = 1 - \frac{SSE}{SST} = \frac{SSR}{SST} = \frac{\sum(\hat{y}_i - \overline{y})^2}{\sum(y_i - \overline{y})^2} = \frac{\sum(\hat{dbh}_i - \overline{DBH})^2}{\sum(dbh_i - \overline{DBH})^2} \tag{9}$$

dbh_i is the measurement data of the device; DBH_i is the measurement data of the tape and caliper; n is the number of device measurements.

The dbh_i measured by the device was compared with $DBH_{capliper}$ measured by the traditional caliper and DBH_{tape} measured by the traditional girder. According to the main technical regulations of the forest resource survey, the diameter order was divided, and the measured data were divided into diameter order A (6.0–15.9 cm), diameter order B (16–25.9 cm), diameter order C (26.0–35.9 cm), and diameter order D (greater than or equal to 36 cm).

4.4. Measuring Results

The results showed that compared with the data measured by caliper, the total deviation at DBH bias ($BIAS_1$) was 0.26 cm (1.44%), the RMSE ($RMSE_1$) was 0.52 cm (2.65%), decision coefficient R^2 was 0.99674, and the overall accuracy was 97.35%. Compared with the data measured by tape, the overall deviation of DBH bias ($BIAS_2$) was −0.12 cm (−0.52%), the RMSE ($RMSE_2$) was 0.33 cm (1.57%), decision coefficient R^2 was 0.99862, and the overall accuracy was 98.43%. When measuring the diameter order C (26.0~35.9 cm) and above, the contact direction should be changed to ensure accuracy.

The data measured by this device is in good agreement with the data measured by the tape and caliper. A linear fit of dbhi with DBHcapliper and DBHtape is shown in Figure 8. The DBH data pairs for different tree species are shown in Table 2. The distribution of DBH Error, the measurement value of the device differs from that of the tape measure or tape measure (Error = dbhi − DBHi) for different tree species is shown in Figure 9. The DBH data pairs for different diameter classes are shown in Table 3. The DBH error distribution for different diameter classes is shown in Figure 10.

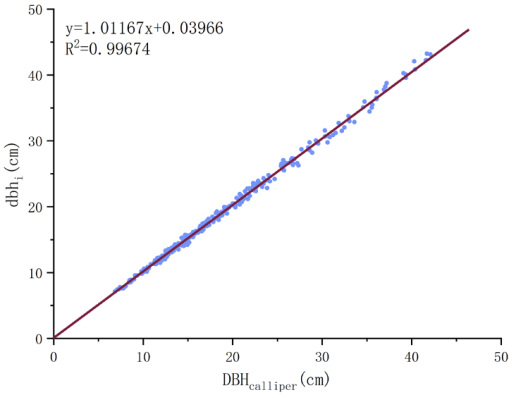

(**a**) Comparing new device with diameter caliper.

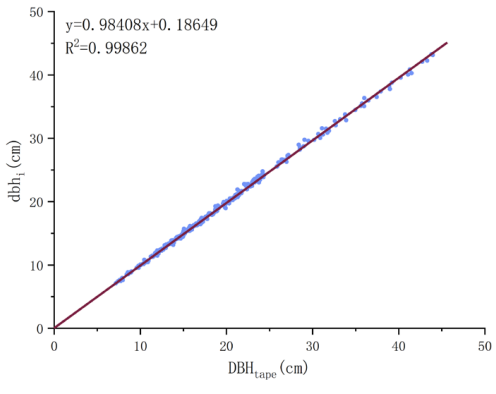

(**b**) Comparing new device with diameter tape.

Figure 8. Linear fitting diagram of dbhi, DBHcapliper, and DBHtape.

Table 2. Comparison of DBH data of different tree species.

Species	Num	$BIAS_1$ (cm)	$relBIAS_1$	$RMSE_1$ (cm)	$relRMSE_1$	$BIAS_2$ (cm)	$relBIAS_2$	$RMSE_2$ (cm)	$relRMSE_2$
T1	37	0.26	1.48%	0.48	2.76%	−0.07	−0.39%	0.29	1.55%
T2	37	0.22	1.50%	0.47	2.99%	−0.04	−0.27%	0.25	1.46%
T3	39	0.17	1.19%	0.47	2.65%	−0.07	−0.36%	0.27	1.31%
T4	39	0.31	2.26%	0.42	2.90%	0.04	0.21%	0.21	1.43%
T5	37	0.27	1.63%	0.47	2.74%	0	−0.30%	0.27	1.71%
T6	36	0.5	1.52%	0.85	2.66%	−0.42	−1.17%	0.57	1.52%
T7	40	0.1	0.61%	0.42	1.94%	−0.17	−0.86%	0.31	1.59%
T8	36	0.24	1.35%	0.47	2.41%	−0.21	−1.07%	0.38	1.94%
SUM	301	0.26	1.44%	0.52	2.65%	−0.12	−0.52%	0.33	1.57%

Ginkgo biloba (T1), magnolia grandiflora linn (T2), camphor tree (T3), Michelia alba (T4), Sycamphora (T5), Italian Yang (T6), sapindus (T7), and pine (T8).

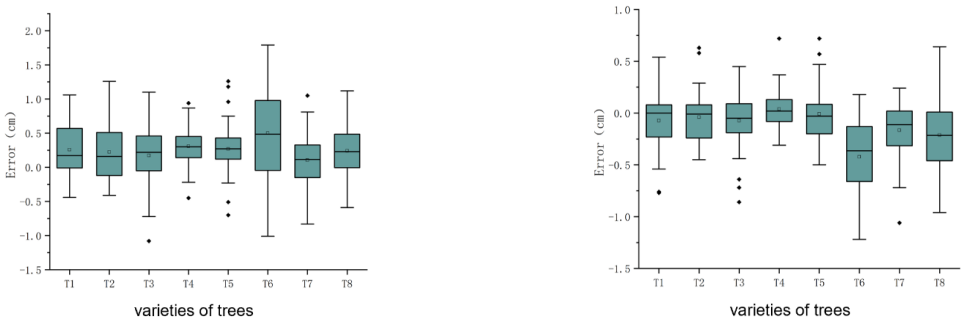

(a) Comparing new device with diameter caliper. (b) Comparing new device with diameter tape.

Figure 9. Distribution of DBH error among different tree species.

Table 3. Comparison of DBH data of different diameter orders.

Class	Num	$BIAS_1$ (cm)	$relBIAS_1$	$RMSE_1$ (cm)	$relRMSE_1$	$BIAS_2$ (cm)	$relBIAS_2$	$RMSE_2$ (cm)	$relRMSE_2$
A	136	0.18	1.53%	0.35	2.75%	−0.05	−0.40%	0.2	1.59%
B	114	0.28	1.43%	0.51	2.54%	−0.1	−0.48%	0.31	1.52%
C	36	0.17	0.68%	0.71	2.52%	−0.2	−0.62%	0.47	1.49%
D	15	0.96	2.49%	1.07	2.78%	−0.69	−1.70%	0.79	1.94%
SUM	301	0.26	1.44%	0.52	2.65%	−0.12	−0.52%	0.33	1.57%

Diameter order A (6.0–15.9 cm), diameter order B (16–25.9 cm), diameter order C (26.0–35.9 cm), diameter order D (greater than or equal to 36 cm).

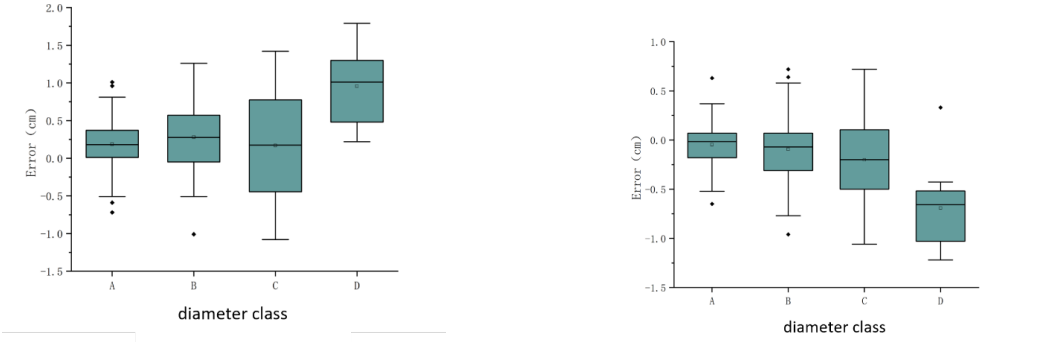

(**a**) Comparing new device with diameter caliper. (**b**) Comparing new device with diameter caliper.

Figure 10. Distribution of DBH error among different diameter orders.

5. Discussion

Forest surveys have evolved with advances in sensor technology, microelectronics, remote sensing, machine learning, computer vision, and internet of things technology. In recent years, new devices and methods for measuring DBH have emerged. For example, the Swedish company Haglöf makes MD II electronic caliper for DBH measurements. However, it is somewhat expensive, at around 2814 CHF [25]. The RD 1000 Fast Tree in the United States is also priced at 2894.4 CHF. Sun et al. developed an electronic caliper based on a capacitive sensor and reported a mean measurement bias was 2.72 cm and RMSE was 3.545 cm [26]. Yuan et al. developed a tree DBH measurement device based on an angle sensor called tri-segment and reported the bias was 0.1 cm and RMSE was 0.45 cm [27]. However, their device is not suitable for wet environments due to the limitations of the device sensor and the device is not easy to carry. In addition, Fan et al. estimated the DBH using the TLS method and reported a bias was 0.38 cm and RMSE was 1.28 cm for the DBH measurement [16]. Cheng et al. extracted the DBH values of trees by laser spot combined with machine vision, the bias was 0.12 cm after the measurement [20]. Wu and Zhou et al. used mobile phone photos to compute DBH values for trees based on monocular vision depth with a bias of 0.237 cm [21]. He and Jia et al. used Unmanned Aerial Vehicle (UAV) remote sensing images to estimate the DBH of trees and obtained a reported bias was 0.02 cm and RMSE was 3.58 cm [24]. Despite the high accuracy of the aforementioned devices and methods, they are not suitable for UAV-based or total station-based forest surveys, given the convenience. Both TLS and camera shooting require expertise in processing complex point data.

In this study, we design a novel device based on sensor and electronics technologies. Moreover, excluding the contacts, the device is small in size, measuring 12 cm long, 7.7 cm wide, 2.6 cm thick, weighing less than 0.5 kg, and lasts at least 20 h in normal use. The device is similar in size and feels to a smartphone and costs just 93.8 CHF. The equipment has a preliminary waterproof function, can be used normally in a humid environment, and has good performance in -10 °C~45 °C. Additionally, a simulation experiment was performed to verify the measurable DBH of the device, which can be used up to a maximum range of 120.3 cm as shown in Table 1. According to the data, the device can pull out the contacts and rotate 180 degrees when the diameter at chest height of the tree is greater than 15.6 cm, and adjust the distance S1 between the two contacts and the sensor to 6 cm, which can ensure the measurement has high accuracy. Through the actual measurement of 301 trees of 8 different species, the bias was -0.12 cm (-0.52%) and 0.26 cm (1.44%). Through the actual measurement of 301 trees of 8 tree species, the bias was -0.12 cm (-0.52%) and 0.26 cm (1.44%), respectively, compared with the measurement results of tape and caliper. The root means square error (RMSE) was 0.33 cm (1.57%) and 0.52 cm (2.65%), respectively. We also present the measured deviations for different diameters and different tree species. There are many variables associated with tree growth, but the main factor in our measurements is that the cross-section of the tree resembles an ellipse or a hyperbola. Nevertheless, the high linear fit and small deviations of the device measurements compared to different conventional tools indicate that the device and computational algorithms are accurate for the DBH measurements.

Even though our measurement method is based on a basic mathematical algorithm proposed by mechanical structure, it is simple and effective and enriches the toolbox of ground-based measurements in forest surveys. In addition, it is easy to carry and operate, the data is automatically recorded and processed, and the measurement efficiency can be effectively increased. At the same time, we develop a computer application that can be securely connected to the device for data uploading, which is of great value for creating databases developed for DBH and tree height management.

6. Conclusions

We combine self-reset displacement sensors to produce a new DBH measurement device with portability, stability, and efficiency. The measurement data of this device is

essentially similar to that of the tape and caliper, as compared to the measurements of the tape and caliper, through actual measurements of 301 trees of eight different species. Compared to tape and caliper, which require manual reading and data entry, the operation efficiency can be greatly improved, and data can be directly derived without manual input. The advent of such devices has remedied the shortcomings of existing devices and methods and provided a new solution for forest surveys. However, the device still has some limitations. It was unable to measure the DBH of trees above 120.3 cm, as well as some standing trees with irregular shapes, and the appearance of the device still needs to be improved and optimized.

Author Contributions: Conceptualization, L.F.; Formal analysis, S.L.; Resources, L.F., Y.S., L.X. and X.L.; Writing—original draft, S.L. All authors have read and agreed to the published version of the manuscript.

Funding: This research was funded by the Zhejiang provincial key science and technology project (2018C02013), the National Natural Science Foundation of China (No. 42001354), and the scientific research project of the education department of Zhejiang province (Y202250137).

Data Availability Statement: The data used to support the findings of this study are available from the corresponding author upon request.

Conflicts of Interest: The authors declare no conflict of interest.

References

1. Mokroš, M.; Liang, X.; Surový, P.; Valent, P.; Čerňava, J.; Chudý, F.; Tunák, D.; Saloň, Š.; Merganič, J. Evaluation of Close-Range Photogrammetry Image Collection Methods for Estimating Tree Diameters. *Int. J. Geo-Inf.* **2018**, *7*, 93. [CrossRef]
2. Yang, Z.; Liu, Q.; Luo, P.; Ye, Q.; Duan, G.; Sharma, R.P.; Zhang, H.; Wang, G.; Fu, L. Prediction of Individual Tree Diameter and Height to Crown Base Using Nonlinear Simultaneous Regression and Airborne LiDAR Data. *Remote Sens.* **2020**, *12*, 2238. [CrossRef]
3. Cabo, C.; Ordóñez, C.; López-Sánchez, C.A.; Armesto, J. Automatic Dendrometry: Tree Detection, Tree Height and Diameter Estimation Using Terrestrial Laser Scanning. *Int. J. Appl. Earth Obs. Geoinf.* **2018**, *69*, 164–174. [CrossRef]
4. Sievänen, R.; Godin, C.; DeJong, T.M.; Nikinmaa, E. Functional-Structural Plant Models: A Growing Paradigm for Plant Studies. *Ann. Bot.* **2014**, *114*, 599–603. [CrossRef] [PubMed]
5. Zheng, S.; Xiong, W.; Fang, L.; Sun, L.; Yuan, F.; Zheng, X. Research on Near-Truth Measurement and Calculation Model of Standing Tree DBH. *J. Northwest For. Univ.* **2021**, *36*(05), 125–132.
6. Zhou, R.; Wu, D.; Zhou, R.; Fang, L.; Zheng, X.; Lou, X. stimation of Dbh at Forest Stand Level Based on Multi-Parameters and Generalized Regression Neural Network. *Forests* **2019**, *10*, 778. [CrossRef]
7. Zhou, X.; He, Y.; Huang, H.; Xu, X. Estimation of Forest Stand Volume on Coniferous Forest Cutting Area Based on Two Periods Unmanned Aerial Vehicle Images. *Sci. Silvae Sin.* **2019**, *55*, 117–125.
8. Xiao-jun, L.; Yong, P.; Bo-wei, C. Accurate Measurement of Individual Tree Position Based on DBH Extraction of Terrestrial Laser Scanning. *For. Sci. Res.* **2020**, *33*, 67–74.
9. Moe, K.T.; Owari, T.; Furuya, N.; Hiroshima, T.; Morimoto, J. Application of UAV Photogrammetry with Lidar Data To Facilitate The Estimation of Tree Locations and DBH Values for High-Value Timber Species in Northern Japanese Mixed-Wood Forests. *Remote Sens.* **2020**, *12*, 2865. [CrossRef]
10. Huang, H.; Li, Z.; Gong, P.; Cheng, X.; Clinton, N.; Cao, C.; Ni, W.; Wang, L. Automated Methods for Measuring DBH and Tree Heights with a Commercial Scanning Lidar. *Photogramm. Eng. Remote Sens.* **2011**, *77*, 219–227. [CrossRef]
11. Liu, G.; Wang, J.; Dong, P.; Chen, Y.; Liu, Z. Estimating Individual Tree Height and Diameter at Breast Height (DBH) from Terrestrial Laser Scanning (TLS) Data at Plot Level. *Forests* **2018**, *9*, 398. [CrossRef]
12. Dalla Corte, A.P.; Rex, F.E.; Almeida, D.R.A.D.; Sanquetta, C.R.; Silva, C.A.; Moura, M.M.; Wilkinson, B.; Zambrano, A.M.A.; Cunha Neto, E.M.D.; Veras, H.F.; et al. Measuring Individual Tree Diameter and Height Using GatorEye High-Density UAV-Lidar in an Integrated Crop-Livestock-Forest System. *Remote Sens.* **2020**, *12*, 863. [CrossRef]
13. Béland, M.; Widlowski, J.-L.; Fournier, R.A.; Côté, J.-F.; Verstraete, M.M. Estimating Leaf Area Distribution in Savanna Trees from Terrestrial LiDAR Measurements. *Agric. For. Meteorol.* **2011**, *151*, 1252–1266. [CrossRef]
14. Ye, W.; Qian, C.; Tang, J.; Liu, H.; Fan, X.; Liang, X.; Zhang, H. Improved 3D Stem Mapping Method and Elliptic Hypothesis-Based DBH Estimation From Terrestrial Laser Scanning Data. *Remote Sens.* **2020**, *12*, 352. [CrossRef]
15. Fan, G.; Nan, L.; Chen, F.; Dong, Y.; Wang, Z.; Li, H.; Chen, D. A New Quantitative Approach to Tree Attributes Estimation Based on LiDAR Point Clouds. *Remote Sens.* **2020**, *12*, 1779. [CrossRef]
16. Srinivasan, S.; Popescu, S.; Eriksson, M.; Sheridan, R.; Ku, N.-W.J.R.S. Terrestrial Laser Scanning as An Effective Tool to Retrieve Tree Level Height, Crown Width, and Stem Diameter. *Remote Sens.* **2015**, *7*, 1877–1896. [CrossRef]

17. Liang, X.; Kankare, V.; Hyyppä, J.; Wang, Y.; Kukko, A.; Haggrén, H.; Yu, X.; Kaartinen, H.; Jaakkola, A.; Guan, F.; et al. Terrestrial Laser Scanning in Forest Inventories. *ISPRS J. Photogramm. Remote Sens.* **2016**, *115*, 63–77. [CrossRef]
18. Schilling, A.; Schmidt, A.; Maas, H.-G. Tree Topology Representation From TLS Point Clouds Using Depth-First Search in Voxel Space. *Photogramm. Eng. Remote Sens.* **2012**, *78*, 383–392. [CrossRef]
19. Cheng, P.; Liu, J.; Wang, D. Measurement Method of Standing Tree Diameter Based on Laser and Machine Vision. *Trans. Chin. Soc. Agric. Mach.* **2013**, *44*, 271–275.
20. Wu, X. Measurement Method of Multi-Tree Standing Factor Based on Smart Phone. Thesis, Zhejiang A&F University, Hangzhou, China, 2019.
21. Zhou, K.; Wang, Y.; Li, J.; Jiang, G.; Xu, A. Research and Implementation of Tree Measurement System Based on Android Platform. *J. Nanjing For. Univ. Nat. Sci. Ed.* **2016**, *40*, 6.
22. Yu, D.; Feng, Z.; Cao, Z.; Jiang, J. Error Analysis of Measuring Height and Volume of Standing Trees by Total Station. *Trans. Chin. Soc. Agric. Eng.* **2016**, *32*, 8.
23. Zhao, F.; Feng, Z.; Gao, X.; Zheng, J.; Wang, Z. Measurement of Tree Height and Volume by Total Station Under Canopy Occlusion. *Trans. CSAE* **2014**, *30*, 9.
24. He, Y.; Zhang, Y.; Li, J.; Wang, J. Measurement of Single Tree Biomass of Abies Faxoniana Using UAV Remote Sensing. *J. Beijing For. Univ.* **2016**, *38*, 8.
25. Haglof Company Group. MD II Caliper Product Sheet [EB/OL]. Available online: https://haglofsweden.com/products/calipers/ (accessed on 29 December 2022).
26. Sun, L.; Fang, L.; Fang, Y.; Weng, Y.; Lou, X. Development of Standing Tree Diameter Measurement Device Based on Capacitive Grid Sensor. *J. Sens. Technol.* **2019**, *32*, 8.
27. Yuan, F.; Fang, L.; Sun, L. Development of A Portable Measuring Device for Diameter at Breast Height and Tree Height. *Austrian J. For. Sci.* **2021**, *138*, 25–50.
28. Singh, M.G.; Rithigaa, S.; Raj, D. Forest Fire Detection and Prevention System Using IOT. In Proceedings of the 3rd International Conference on Machine Learning, Advances in Computing, Renewable Energy and Communication, Tamenrasset, Algeria, 20–22 November 2022.
29. Kandris, D.; Nakas, C.; Vomvas, D.; Koulouras, G. Applications Of Wireless Sensor Networks: An Up-To-Date Survey. *Appl. Syst. Innov.* **2020**, *3*, 14. [CrossRef]
30. Li, C.; Sun, L.; Xu, Z.; Wu, X.; Liang, T.; Shi, W. Experimental Investigation and Error Analysis of High Precision Fbg Displacement Sensor for Structural Health Monitoring. *Int. J. Struct. Stab. Dyn.* **2020**, *20*, 2040011. [CrossRef]
31. Xu, L.-L.; Fan, Y.-X.; Liu, H.; Zhang, T.; Tao, Z.-Y. Terahertz Displacement Sensing Based on Interface States of Hetero-Structures. *Electronics* **2020**, *9*, 1213. [CrossRef]

Disclaimer/Publisher's Note: The statements, opinions and data contained in all publications are solely those of the individual author(s) and contributor(s) and not of MDPI and/or the editor(s). MDPI and/or the editor(s) disclaim responsibility for any injury to people or property resulting from any ideas, methods, instructions or products referred to in the content.