energies

MDPI

Article

Research on the Heavy Gas Action Characteristics of BF Type Double Float Ball Gas Relay Under Transient Oil Flow Impact

Chengxiang Liu [1,2], Tengbo Zhang [3], Chunhui Zhang [1,2], Bo Xu [1,2], Shixian He [3] and Shuting Wan [3,*]

[1] China Yangtze Power Co., Ltd., Yichang 443000, China; liu_chengxiang@ctg.com.cn (C.L.); zhang_chunhui@ctg.com.cn (C.Z.); xu_bo1@ctg.com.cn (B.X.)
[2] Hubei Technology Innovation Center for Smart Hydropower, Wuhan 430000, China
[3] Hebei Key Laboratory of Health Maintenance and Failure Prevention of Electric Machinery and Equipment, North China Electric Power University, Baoding 071003, China; 18233312931@163.com (T.Z.); 15832218387@139.com (S.H.)
* Correspondence: 52450809@ncepu.edu.cn

Abstract: The gas relay is a common non-electric protection device inside transformers, installed on the connecting pipeline between the transformer oil tank and the oil conservator. When the transformer malfunctions and the oil flow value reaches the heavy gas setting value of the gas relay, a heavy gas alarm is triggered. Therefore, accurately analyzing the heavy gas action characteristics and the setting value of the gas relay directly affects the accuracy of the heavy gas alarm. The BF(Bi-Float) type double float ball gas relay uses steady-state oil flow to calibrate the setting values of heavy gas action. In reality, transformer faults cause transient oil flow. To explore the relationship between the oil flow state and gas relay flow velocity setting values, a dynamic model of the heavy gas action process of BF type double float ball gas relay was first established, and the influence of the oil flow state on the gas relay baffle action process was analyzed. Then, a transient oil flow impact test bench was developed to experimentally study the heavy gas action characteristics of gas relays under different intensities of transient oil flow impact. Theoretical and experimental research results indicate that different oil flow impact states have a significant effect on the flow velocity setting values of gas relays. The flow velocity setting value of the BF type double float ball gas relay used in this study under transient oil flow impact is 0.8 m/s, which is lower than its factory flow velocity setting value of 1 m/s. These research results have positive significance for optimizing the performance of gas relays and improving the operational reliability of power transformers.

Keywords: flow velocity setting values; gas relay; heavy gas action; transformer fault; transient oil flow

check for updates

Academic Editor: Adolfo Dannier

Received: 9 January 2025
Revised: 13 February 2025
Accepted: 13 February 2025
Published: 16 February 2025

Citation: Liu, C.; Zhang, T.; Zhang, C.; Xu, B.; He, S.; Wan, S. Research on the Heavy Gas Action Characteristics of BF Type Double Float Ball Gas Relay Under Transient Oil Flow Impact. *Energies* **2025**, *18*, 945. https://doi.org/10.3390/en18040945

Copyright: © 2025 by the authors. Licensee MDPI, Basel, Switzerland. This article is an open access article distributed under the terms and conditions of the Creative Commons Attribution (CC BY) license (https://creativecommons.org/licenses/by/4.0/).

1. Introduction

The gas relay is a common non-electric protection device inside transformers [1,2], installed on the connecting pipeline between the transformer oil tank and the oil conservator [3,4]. When a minor fault occurs inside the transformer, causing oil to decompose and produce gas, the light gas contact of the gas relay will activate and issue an alarm signal. When a serious fault occurs inside the transformer, a strong oil flow surge will be generated, which will impact the baffle of the gas relay, activate the heavy gas contact, issue an alarm signal, and cause the transformer to trip and stop [5–7]. However, accidents such as transformer tripping and shutdown due to gas protection misoperation occur frequently during actual operation, which reduces the reliability of the power system [8–13]. There

are mainly two types of gas relays: one is the QJ-type gas relay, which is provided with resistance by a spring behind the baffle and changes the setting value by adjusting the elastic coefficient of the spring; the other type is BF type double float ball gas relay, which provides resistance through the magnetic force of the baffle and magnet.

In recent years, many scholars have conducted research on transformer faults, heavy gas operation of gas relays, and their setting values. Literature [14,15] studied actual transformer fault cases and analyzed the causes of transformer faults. Literature [16–18] mainly studied the changes and distribution of oil pressure and temperature driven by internal arcs during transformer faults. Luo et al. [19] studied the diffusion characteristics of dissolved gases in oil under different oil flow cycles. Laburú et al. [20] determined whether a transformer had malfunctioned by analyzing the composition of dissolved gases in insulating oil. Lins et al. [21] studied the influence of structural parameters of gas relays on the internal flow field of relays, with a focus on the effect of the opening size of safety flaps on the internal flow field of gas relays. Literature [22,23] tested the heavy gas action characteristics of gas relays under different degrees of transformer faults, improved the setting method of gas relays, and reduced the misoperation rate of relays. However, the determination of the setting values is obtained under steady-state oil flow, and the actual transformer fault generates transient oil flow, which has a certain impact on the determination of the setting values. Literature [24–28] mainly studied the QJ-type gas relay. Wan et al. [24] developed a new type of gas relay capable of a real-time output of baffle angle and proposed a monitoring method for the operating status of oil-immersed transformers based on the baffle angle characteristics of gas relays. Wan et al. [25] established a dynamic model of a gas relay baffle and analyzed and derived the initial angular acceleration characteristics of the baffle under different impact energies. Based on the initial angular acceleration of the baffle rotation, the fault energy and severity can be predicted. Wan et al. [26] conducted experimental research on the variation laws of the action time T1 of the baffle from zero degrees to the action angle of heavy gas and the holding time T2 of the baffle in the heavy gas state under different energy levels of heavy gas faults in transformers. It was concluded that as the degree of heavy gas faults in transformers developed, T1 gradually decreased and T2 gradually increased. The degree of fault was identified by the trend of changes in T1 and T2 time. Wan et al. [27] obtained the setting values of the rotation angular velocity of the baffle from experimental and simulation results. By determining whether the rotation angular velocity of the baffle has reached its setting values, a timely heavy gas alarm can be triggered, which improves the sensitivity of the heavy gas alarm. Yan et al. [28] conducted a dynamic analysis of the transient motion process of the gas relay baffle. Literature [29–34] mainly studied the BF type double float ball gas relay. Jia et al. [29] analyzed the causes of heavy gas misoperation of BF type double float ball gas relay and proposed anti-misoperation strategies. Literature [30–34] conducted numerical simulations on the process of heavy gas alarm of BF type double float ball gas relay, attempting to reveal the reasons for the misoperation of BF type double float ball gas relay through numerical analysis. Li et al. [31] studied the internal flow field motion law and analyzed the reasons for misoperation. Wang et al. [32] further conducted a simulation analysis on the misoperation caused by reverse oil flow impact inside the BF type double float ball gas relay when a transformer failure occurred and found that there is a slight possibility of misoperation due to internal oil flow. Literature [33,34] proposed using computational fluid dynamics (CFD) to numerically simulate the gas alarm process of BF type double float ball gas relay and verify and optimize the oil flow setting value to reduce the occurrence of heavy gas misoperation. Most of the research on BF type double float ball gas relays is focused on simulation and has not been experimentally studied.

The above literature has limited research on the heavy gas action characteristics of BF type double float gas relays under transient oil flow and has not studied the flow velocity setting method of gas relay when it leaves the factory. This article establishes a dynamic model of the heavy gas action process of the BF type double float ball gas relay, develops a testing platform for the heavy gas action characteristics of the gas relay under transient oil flow impact, conducts theoretical analysis and experimental research on the heavy gas action characteristics of the gas relay under different intensities of transient oil flow impact, and deeply explores the influence mechanism of steady-state oil flow and transient oil flow impact on the heavy gas setting value of the gas relay.

The main contributions of this article are as follows:

1. Studying investigated the heavy gas action characteristics of BF type double float ball gas relay under transient oil flow conditions, enriching the research on the working characteristics of the gas relay.
2. Through experiments, it has been proven that under the condition of transient oil flow impact, the setting value of the BF type double float ball gas relay is lower than the setting value at the factory, providing the possibility of seeking new setting methods for gas relays.

The structure of this work is as follows. The structure of the BF type double float ball gas relay is analyzed in Section 2. The force on the BF type double float ball gas relay baffle is analyzed in Section 3. In Section 4, this paper introduces the developed testing platform for the heavy gas action characteristics of gas relays under transient oil flow impact. The heavy gas action characteristics of gas relays under transient oil flow impact under different conditions through experiments are explored in Section 5. Section 6 provides an in-depth analysis of the research content of this article and describes the contributions of the research work. In Section 7, it is concluded through theoretical and experimental analysis that the setting value of BF type double float ball gas relay under transient oil flow impact is lower than the setting value at the factory and explains the shortcomings of the research work and future research directions.

2. Structural Analysis of BF Type Double Float Ball Gas Relay

As shown in Figure 1, a gas relay is a non-electric protection device for transformers installed in the pipeline between the transformer oil tank and the oil conservator.

When a minor electrical fault occurs in an oil-immersed transformer, such as a small number of turn-to-turn and inter-layer short circuits, etc., the arc at the point of failure causes the insulating oil to slowly vaporize into small bubbles (gas), which accumulate at the gas relay through the pipe. When the gas reaches a certain amount, the oil level drops, triggering the light gas protection action, as shown in Figure 2.

When a serious electrical fault occurs in an oil-immersed transformer, such as a large area short circuit or breakdown between turns, the generated arc will cause the oil at the fault point to vaporize instantly, forming oil vapor (gas), accompanied by a local temperature rise. Due to the expansion inertness of the surrounding oil, there is a sharp increase in gas, resulting in a huge pressure difference at the oil–gas interface and propagating in the form of pressure waves (shock waves) in all directions. When the energy accumulated by the pressure wave drives the oil to flow through the gas relay through the pipeline and reach the oil conservator of the transformer, the transient oil flow impacts the gas relay baffle, triggering the action of heavy gas protection.

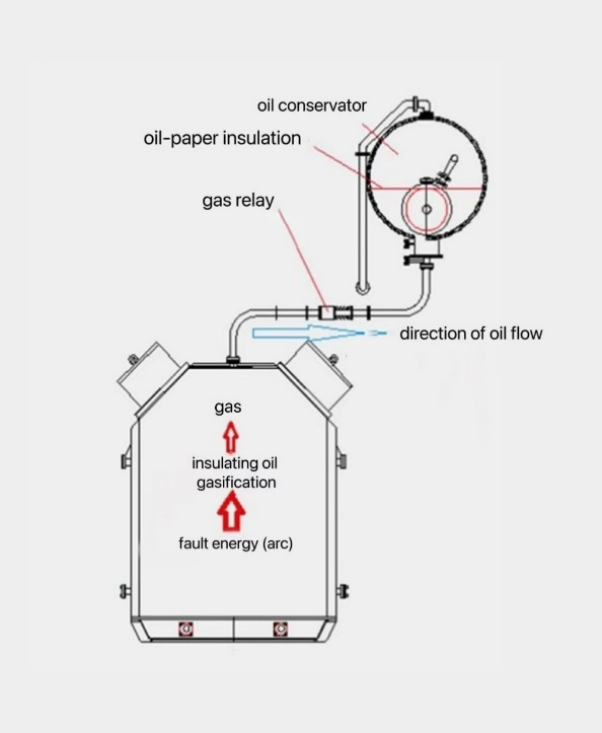

Figure 1. Schematic diagram of gas relay installation.

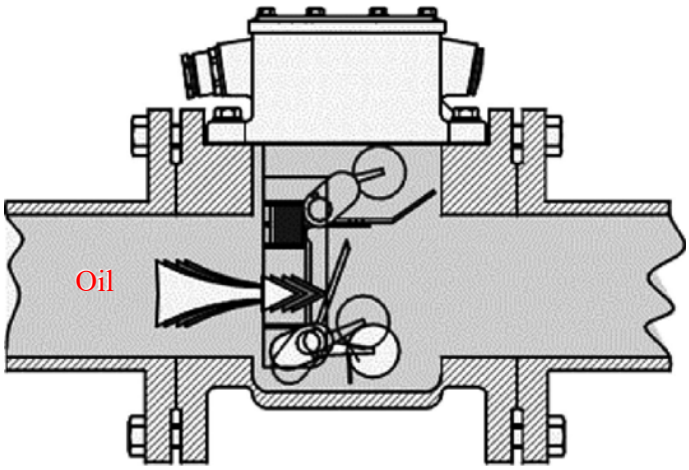

Figure 2. BF type double float ball gas relay heavy gas action principle.

This paper takes the BF type double float ball gas relay produced by EMB in Germany as the research object, with a factory setting value of 1 m/s. The physical and model are shown in Figure 3. When the transformer is working normally, the gas relay is filled with oil inside, and the upper and lower float balls are in an upward floating state due to buoyancy. When a fault occurs inside the transformer, the oil decomposes and produces gas, causing the oil level to drop. The float drives the connecting rod to rotate, and the magnet approaches the reed switch. The internal contact of the reed switch closes, triggering a light gas alarm signal. When the degree of the fault further increases, there is transient oil flow inside the pipeline. The transient oil flow impacts the baffle and drives the lower float ball connecting rod to rotate. The dry spring contact closes, triggering the heavy gas alarm signal, and at the same time, the trip circuit is connected to cut off the power supply of the transformer.

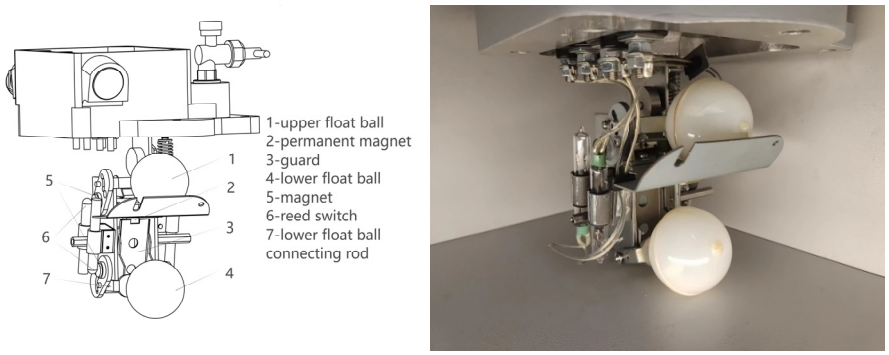

(**a**) (**b**)

Figure 3. Construction diagram of BF type double float ball gas relay: (**a**) 3D model diagram; (**b**) physical picture.

3. Theoretical Analysis of Heavy Gas Action Characteristics of BF Type Double Float Ball Gas Relay

The force analysis of the heavy gas action process of the BF type double float ball gas relay is shown in Figure 4. The baffle and the lower float ball rotate around the bottom of the baffle, and the resultant torque M of the baffle is composed of four parts, namely the gravity torque M_1 of the baffle and the lower float ball, the magnetic torque M_2 of the permanent magnet on the baffle, the buoyancy torque M_3 of the lower float ball, and the impact torque M_4 of the oil flow on the baffle.

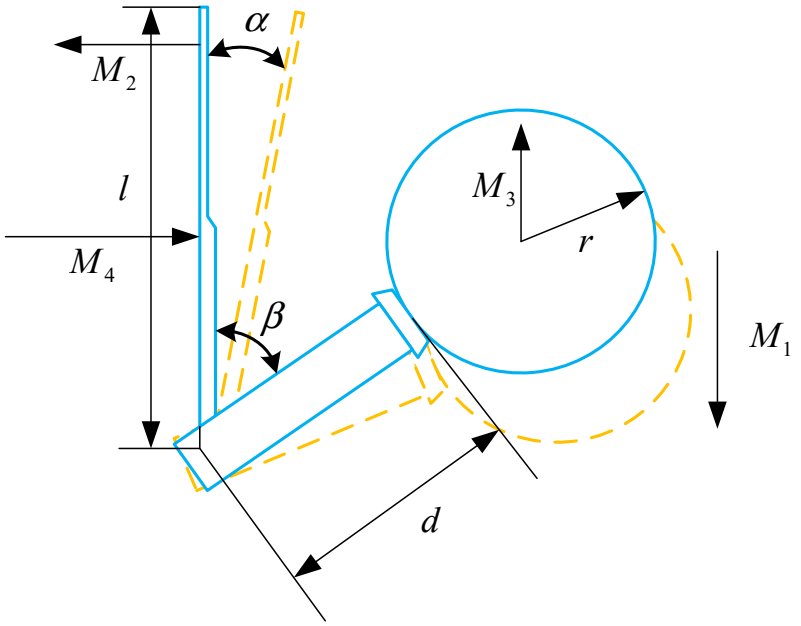

Figure 4. Force analysis diagram of the baffle.

During the process of heavy gas action, the baffle and the lower float ball rotate around the bottom of the baffle, and the calculation formula for the total torque is:

$$M = -M_1 + M_2 + M_3 - M_4 \tag{1}$$

The expression for the gravitational torque M_1 acting on the baffle and the lower float ball is:

$$M_1 = \frac{m_1 g l \sin\alpha + m_2 g d \sin\beta}{2} \tag{2}$$

In the formula, the unit of M_1 is Nm, m_1 is the mass of the baffle, with a value of 0.011 kg; m_2 is the mass of the connecting rod of the lower float ball, with a value of 0.051 kg; g is the acceleration due to gravity, with an initial value of g = 9.8 N/kg; l is the distance from the equivalent magnetic force point of the permanent magnet to the rotation center of the baffle, with a value of 0.05 m; d is the length of the connecting rod of the lower float, with a value of 0.02 m; α is the angle of rotation of the baffle, with an initial value of 0°; β is the angle between the baffle and the initial lower float ball connecting rod, with an initial value of 60°.

The expression for the magnetic torque M_2 of the permanent magnet on the baffle is:

$$\begin{aligned} M_2 &= M_s V B \\ &= \mu_0 M_s V H \\ &= \frac{\mu_0 {M_s}^2 V^2}{4\pi l^3 \sin^3 \alpha} \end{aligned} \tag{3}$$

In the formula, the unit of M_2 is Nm, μ_0 is the vacuum magnetic permeability, with a value of $4\pi \times 10^{-7}$ T·m/A; M_s is the saturation magnetization, with a value of 1.76 A/m, and V_1 is the volume of the magnet, with a value of 4224 mm^3, B represents the magnetic induction intensity, and H represents the magnetic field strength.

The expression for the buoyancy torque M_3 experienced by the lower float ball is:

$$\begin{aligned} M_3 &= F_{total}(d+r)\sin\beta \\ &= (F_{static} + F_{drag})(d+r)\sin\beta \\ &= (\frac{4\rho g \pi r^3}{3} + \frac{C_d \rho v^2 \pi r^2}{2})(d+r)\sin\beta \end{aligned} \tag{4}$$

In the formula, the unit of M_3 is Nm, F_{total} is the total buoyancy, F_{static} is the static buoyancy, F_{drag} is the drag force, r is the radius of the lower float ball, with a value of 0.02 m, and ρ is the oil density of 960 kg/m^3; C_{d} is the drag coefficient, with a magnitude of 0.5; v is the oil flow velocity, setting to 1 m/s.

The expression for the transient impact torque M_4 of the oil flow on the baffle is:

$$M_4 = \int_A l\cos\alpha \left(\rho V \frac{dV_2}{dt} + 0.5\rho C_d \left(\frac{dV_2}{dt} \right)^2 A \right) dA \tag{5}$$

In the equation, the unit of M_4 is Nm, V_2 is the volume of the fluid and $\frac{dV}{dt}$ is the volumetric flow velocity. The first part $\rho V \frac{dV}{dt}$ represents the inertial force caused by changes in fluid volume. The second part $0.5\rho C_d \left(\frac{dV_2}{dt} \right)^2 A$ represents the drag force caused by fluid flow.

During the operation of gas relays, they will be subject to the impact of transient oil flow inside the transformer. At present, the calibration of gas relays in industrial applications is completed under a steady-state oil flow environment, and the calculation formula for steady-state oil flow impact torque is shown in (6). The unit of M_5 is Nm. Compared to transient oil flow impact torque, steady-state oil flow impact torque does not include inertial forces caused by changes in fluid volume. This results in the transient oil flow impact torque being greater than the steady-state oil flow impact torque. As a result, the flow velocity setting values by the gas relay at the factory may be larger than the actual value. Therefore, conducting experimental analysis on transient oil flow impact is more reasonable, which is of great significance for accurately calibrating gas relays and ensuring their reliable operation under actual working conditions.

$$M_5 = \int_A 0.5\rho l C_d {V_2}^2 A \cos\alpha dA \tag{6}$$

We use the Fluent module from ANSYS 2024 here. The flow velocity of the surging oil flow in the pipeline under different excitation pressures obtained through experiments is used as the inlet boundary condition. Add the flow velocity curve equation obtained through experiments to the pre-written UDF (user defined function) program, and define the pipeline oil flow velocity under different excitation sources in the Fluent velocity inlet condition. The inlet boundary condition is velocity-inlet, the outlet boundary condition is pressure-outlet, and the remaining boundaries are non-slip walls. The turbulence model adopts the SST (shear stress transport) k-ω two-equation model, and the fluid uses fuel oil liquid with a density of 960 kg/m^3 and a viscosity of 0.012 kg/(m·s). The dynamic grid method uses smooth and remesh, with the dynamic grid area being the boundary between the baffle and the lower floating ball. Encrypt the grid during grid processing, insert automatic methods, and adjust surface dimensions into the grid. The number of nodes in the partitioned grid computing model is 284,420, and the number of grid units is 1,527,271. Calculate the values of M_1, M_2, M_3, and M_4 for the rotation angles of the baffle at 0°, 5°, 10°, 15°, and 20°, as shown in Table 1.

Table 1. Torque values at different baffle angles.

α/°	β/°	Gravity Torque M_1 (Nm)	Magnetic Torque M_2 (Nm)	Buoyancy Torque M_3 (Nm)	The Impact Torque of Oil Flow on the Baffle M_4 (Nm)	Resultant Torque M (Nm)
0	60	0.004328	0.066784	0.021358	0.084132	−0.000318
5	65	0.004765	0.008444	0.022351	0.083812	−0.057782
10	70	0.005165	0.002550	0.023175	0.082854	−0.062294
15	75	0.005525	0.001105	0.023821	0.081265	−0.061864
20	80	0.005844	0.000586	0.024287	0.079058	−0.060029

Fit the data points in Table 1 into curves, and Figures 5a, 5b, 5c, 5d and 5e, respectively, reflect the relationship between the baffle angle α and the gravitational torque M_1, magnetic torque M_2, buoyancy torque M_3, impact torque M_4, and resultant torque M.

For the BF type double float ball gas relay, the magnetic force of the permanent magnet on the baffle is closely related to the distance. The magnetic force decays exponentially with the increase in the distance between the baffle and the permanent magnet. When the baffle angle α is 0, the magnetic force is maximum. Due to the rapid decay law of magnetic force, a large impact force is required at the torque when the baffle begins to overcome the magnetic force of the permanent magnet on the baffle in the initial state. Once the baffle begins rotating, the magnetic force of the permanent magnet on the baffle rapidly decays. At this time, only a small impact force is needed to maintain the baffle in a rotating state.

From Figure 5, it can be seen that the torque of gravity and torque of buoyancy are positively correlated with the angle of rotation of the baffle. As the baffle's rotation angle increases, the torque of gravity and buoyancy also increases. The magnetic torque shows a negative correlation with the angle of the baffle, and its attenuation amplitude is extremely significant. This law is highly consistent with the actual operating conditions, further verifying the correctness of the theoretical analysis of the mechanical characteristics of the BF type double float ball gas relay and providing a strong theoretical basis for the design, operation monitoring, and fault analysis of the gas relay.

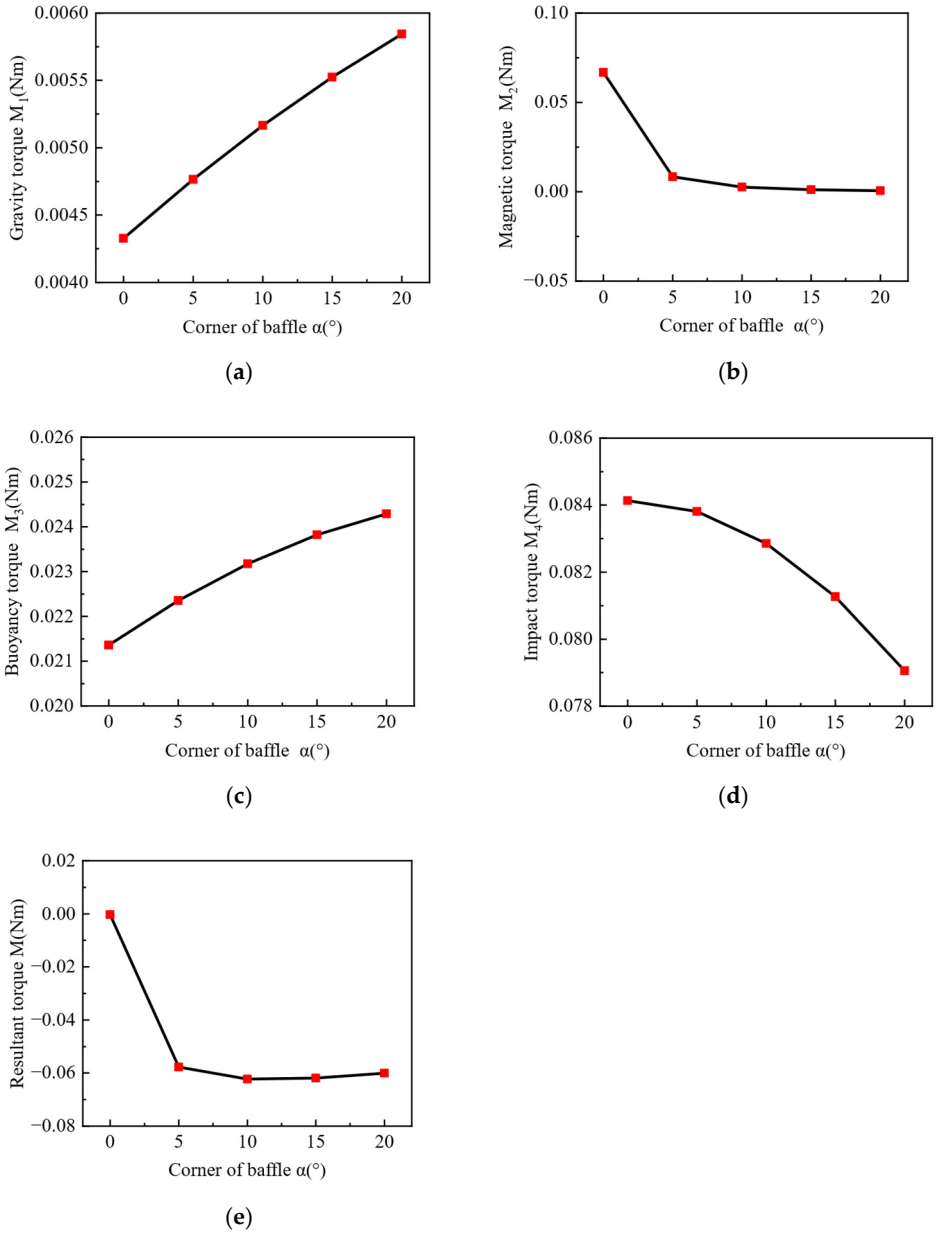

Figure 5. Torque diagrams at different baffle angles: (**a**) gravity torque diagram; (**b**) magnetic torque diagram; (**c**) buoyancy torque diagram; (**d**) impact torque diagram; (**e**) resultant torque diagram.

4. Testing Platform for Heavy Gas Action Characteristics of Gas Relay Under Transient Oil Flow

The current calibration methods for gas relay flow velocity setting values mostly use single-caliber pipeline flow velocity calibration algorithms or multi-pipeline flow velocity direct measurement methods. Firstly, the subject's gas relay is clamped between the clamping devices. Then, the control system adjusts the speed of the oil pump with the help of a frequency converter. The oil flow velocity in the pipeline starts from 0 m/s and gradually, uniformly, and stably increases. During this process, continuously increase the flow velocity until a tripping action output occurs, and the measured flow velocity value is the stable flow velocity value. It should be noted that from the stage of slow, uniform, and stable increase in flow velocity until there is a tripping action output, the average change in flow velocity should not exceed 0.02 m/s.

The above calibration method utilizes steady-state oil flow to impact the gas relay baffle. However, in actual working conditions, the gas relay baffle is subjected to transient

oil flow impact generated by transformer fault excitation, which makes the current gas relay flow velocity calibration method unsuitable for real working conditions.

The gas relay heavy gas action characteristic testing platform developed in this article adopts the method of transient oil flow impact baffle, which can truly simulate the heavy gas action of gas relays caused by transformer faults, providing more realistic testing conditions for accurate calibration and performance evaluation of gas relays.

4.1. Overall Structure of Testing Platform for Heavy Gas Action Characteristics of Gas Relay Under Transient Oil Flow

The structure of the gas relay heavy gas action characteristic testing platform is shown in Figure 6, mainly composed of the testing platform body, measurement system, and control system.

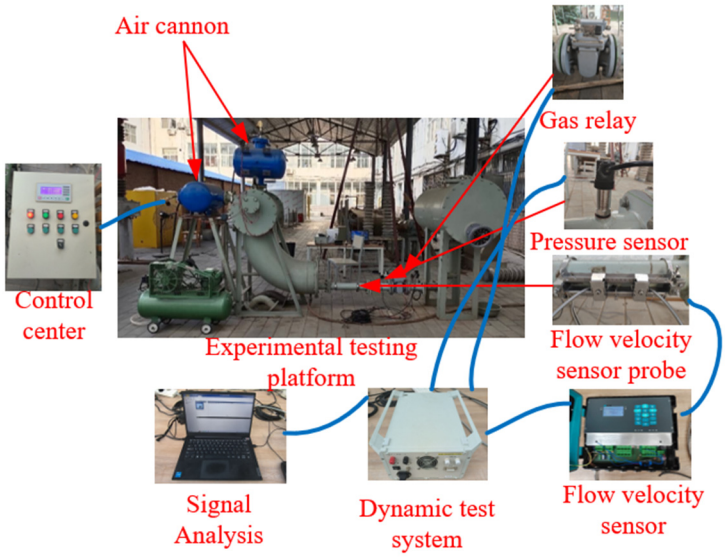

Figure 6. Heavy gas action characteristics testing platform.

The design of the testing platform body includes eight parts: an air compressor, air cannon, pulsating flow chamber, tested pipeline, gas relay, bellows, butterfly valve, and capsule oil conservator. It is worth noting that the pulsating flow chamber is filled with transformer oil, and its oil level is about 0.2 m away from the air cannon blasting port.

The air cannon provides the external excitation source required for the test platform, which is the key link for energy excitation in the entire test. The pulsating flow generation chamber creates space for compressed air to expand and do work. The tested pipeline is used to install test sensors, and the gas relay is responsible for outputting heavy gas signals. The corrugated pipe plays a dual role in pipeline correction and pipeline vibration suppression, ensuring the stability and accuracy of the entire pipeline system during the test process. The butterfly valve can effectively control the on/off of the pipeline, achieving flexible control of the test process and facilitating operation in different test stages. The main function of the capsule oil conservator is to store and replenish oil, ensuring stable oil volume in the oil system during the test process and maintaining a normal test environment.

Using air compressors and air cannons to apply varying degrees of external excitation sources to the oil pipeline, generating transient oil flow, impacting the gas relay baffle, and simulating pipeline transient oil flow caused by internal faults in transformers. By using pressure sensors and ultrasonic flow velocity sensors to accurately measure pipeline pressure, flow velocity, and heavy gas signals, comprehensive and accurate data support is provided for subsequent data analysis and research.

4.2. Air Cannon Selection

The air cannon is one of the core components of the entire system. The blasting process of an air cannon is essentially the process of compressing gas to expand and do work. Considering the extremely short blasting time of the air cannon, this blasting process can be approximated as an adiabatic work process.

After inflation and before detonation, the pressure and volume of the gas inside the air cannon are P_1 and V_3, respectively, which are the initial states. In the final state after the explosion, the gas pressure and volume are P_2 and V_4. Since the gas will eventually communicate with the atmosphere after the explosion, the value of P_2 is the atmospheric pressure. At this point, if air is considered as an ideal gas, then:

$$PV^K = C \tag{7}$$

In the equation, P is the state pressure, V is the volume of the gas at this time, K is the adiabatic constant, and C is a constant; the work done by the external environment on the gas as it transitions from a compressed state to an expanded state (i.e., at room temperature) in an adiabatic state is:

$$W = \int_{V_3}^{V_4} -Pdv = -\int_{V_3}^{V_4} CV^{-K}dv \tag{8}$$

The negative sign in Equation (8) is because the state at this time is gas expansion, and the outside world does negative work on the gas, that is, the gas does positive work on the outside world. Among them, C is a constant, which can be obtained by $PV^K = C$ and determined by air cannons of different capacities. Equation (9) can be solved:

$$W = \frac{C}{K-1}(V_4^{-K+1} - V_3^{-K+1}) \tag{9}$$

The experiment was conducted in a room-temperature air environment, so the air constant K was set to 1.4.

If the pressure P_1 and density inside the air cannon at this time are ρ_1, while the external air pressure P_2 and density are ρ_2, and the losses caused by fluid viscosity and flow velocity are ignored, the adiabatic energy equation of the air cannon is:

$$\frac{K}{K-1}\cdot\frac{P_1}{\rho_1} + \frac{v_1^2}{2g} = \frac{K}{K-1}\cdot\frac{P_2}{\rho_2} + \frac{v_2^2}{2g} \tag{10}$$

At room temperature, the air density is 1.205 kg/m^3, where g is the acceleration due to gravity, v is the velocity, and K is the adiabatic constant. Taking K = 1.4, the velocity formula is obtained when v_1 = 0:

$$v_2 = \sqrt{\frac{2gK}{K-1}\cdot\frac{P_2}{\gamma_1}\left[\left(\frac{P_1}{P_2}\right)^{\frac{K-1}{K}} - 1\right]} \tag{11}$$

According to calculations, when the pressure is 0.8 MPa, the ejection velocity of an air cannon with a volume of 50 L can reach 460 m/s. This speed can meet the requirements for exciting transient oil flow, providing strong support for the smooth conduct of subsequent transient oil flow-related experiments, as shown in Figure 7.



Figure 7. Physical picture of air cannon.

4.3. Measurement System

During the experiment, it is necessary to measure the internal pressure, oil flow velocity, and heavy gas signal of the pipeline. Therefore, the measurement system includes temperature sensors, pressure sensors, ultrasonic flow velocity sensors, BF type double float ball gas relays, flip plate level gauges, data acquisition instruments, and upper position machine software, as shown in Figure 8.

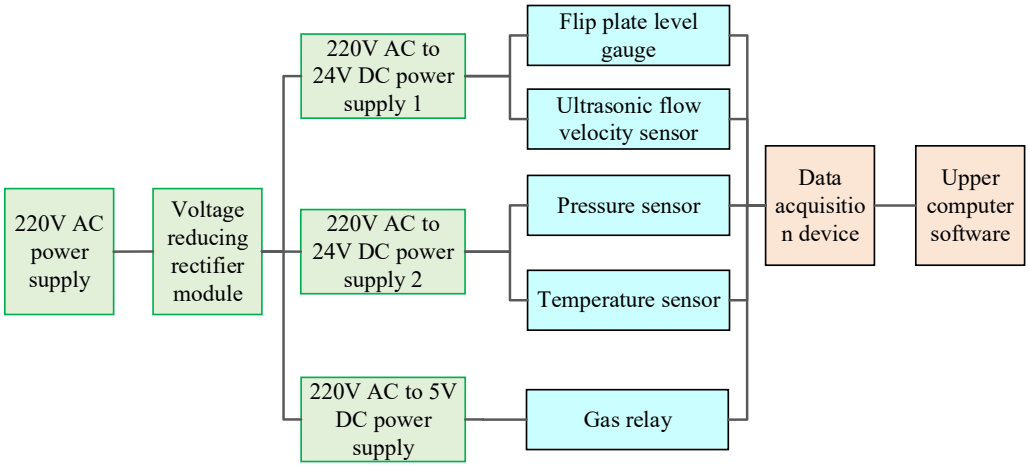

Figure 8. Composition diagram of a measurement system and power supply system.

The temperature sensor selected is a contact type temperature sensor, as shown in Figure 9, the manufacturer is Anhui Tiandao Instrument Manufacturing Department of China Hefei, model is TDHSM-010, and measuring range is 0–100 degrees. The pressure sensor selected is YD-322H14V514BG, manufactured by Suzhou Xsenr Instrument Technology Co., Ltd., located in Suzhou, China. It has a response frequency of 500 Hz and a response time of 2 ms, and is installed at the front end of the gas relay to test the fluid pressure at the inlet of the gas relay, as shown in Figure 10. The technical parameters of the pressure sensor are shown in Table 2.



Figure 9. Temperature sensor.



Figure 10. Pressure sensor.

Table 2. Technical parameters of pressure sensors.

Product Name	Pressure Sensor
Measurement Medium	Liquid or gas (non-corrosive to stainless steel)
Monolithic Material	Membrane 316s stainless steel, process link 304 stainless steel
Pressure Range	0~1.6 MPa
Pressure Mode	Gauge pressure, absolute pressure, negative pressure
Output Signal	0~5 V
Supply Voltage	24 VDC
Accuracy Grade	0.1% FS
Medium Temperature	−40~85 °C
Ambient Temperature	−40~85 °C
Overload Performance	200% FS
Response Frequency	≤500 HZ
Stability	+0.01% FS/year
Temperature Drift	+0.01% FS/°C
IP Grade	IP65

The flow velocity sensor adopts the FLUXUS F721 non-contact ultrasonic flow velocity sensor from Emerson's Flexim Americas division, located in New York, NY, USA, as shown in Figure 11. The technical parameters of the flow velocity sensor are shown in Table 3. The response time is 20 ms, and the measurement range is between ±0.01 m/s and ±25 m/s. Compared with traditional contact flow velocity sensors, the F721 sensor

can effectively reduce interference with the internal oil flow state of pipelines, significantly improve testing accuracy, and create favorable conditions for accurately obtaining oil flow velocity data. The flip plate level gauge, shown in Figure 12, is selected with model number UHZ-519, manufactured by Taizhou Xinrongming Automation Equipment Co., Ltd., located in Taizhou, China. The technical parameters of the flip plate level gauge are shown in Table 4.



Figure 11. Flow velocity sensor.

Table 3. Technical parameters of flow velocity sensor.

Product Name	F721 Standard On-Site Instruments
Measurement Medium	All acoustic fluids
Measurement Range	0.01 m/s~25 m/s
Measurement Repeatability	0.15% reading, depending on the application scenario
Temperature Compensation	Complies with ANSI/ASME MFC-5.1-2011 recommendations
Measurement Accuracy of Volumetric Flow Rate	±1% reading, depending on the application scenario ±0.5% reading, calibrated
Response Time	1S, 20 ms optional
Measurement Rate (single channel)	100~1000 Hz
IP Grade	IP66
Operation Temperature	−40 °C~60 °C (when the ambient temperature is below −20 °C, the instrument works normally but there is no display)



Figure 12. Flip plate level gauge.

Table 4. Technical parameters of flip plate level gauge.

Product Name	Flip Plate Level Gauge
Range of Measurement	0~1000 mm
Medium Density	0.49~1.99 g/cm^3
Viscosity	≤0.019 Pa.S
Operation Temperature	−39.9~349.99 °C
Pressure Grade	≤31.99 MPa
Measurement Accuracy	≤±9.99 mm
Installation Method	Side mounted, top mounted, bottom mounted
IP Grade	IP64.99
Explosion-proof Grade	IbIICT4 (Intrinsically safe type), IbIIBT4 (Explosion proof type)
Transmission Mode	4~20 mA or switch quantity
Interface Flange	PN4.0 DN25 HG20593 (Side mounted)

4.4. Functional Testing

To verify the scientificity and rationality of the gas relay heavy gas performance testing platform and to explore the stability and accuracy of the experimental device while ensuring the authenticity and effectiveness of the test data, a gas relay heavy gas performance testing platform was designed for repeated tests under different pressures, and the output of signal data was observed. Using an air cannon to set the excitation pressure to 0.120 MPa and 0.130 MPa, synchronously collect the pressure, flow velocity, and heavy gas signals under transient oil flow, as shown in Figure 13.

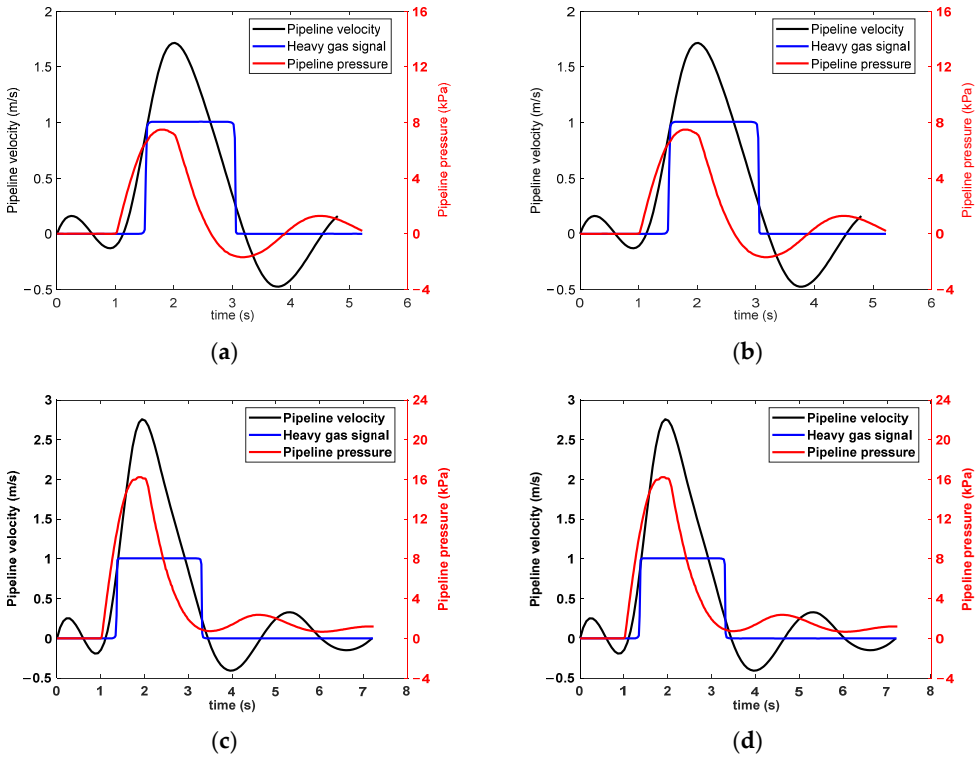

Figure 13. Comparison before and after excitation pressure of 0.120 MPa and 0.130 MPa: (**a**) 0.120 MPa first experiment; (**b**) 0.120 MPa second experiment; (**c**) 0.130 MPa first experiment; (**d**) 0.130 MPa second experiment.

The comparison of two experimental data points under excitation pressures of 0.120 MPa and 0.130 MPa and the obtained correlation coefficients $r \geq 99.99\%$ strongly confirm the excellent performance of the testing platform in system stability and measurement accuracy.

5. Experimental Analysis of Heavy Gas Action Characteristics of BF Type Double Float Ball Gas Relay

To investigate the action signals of heavy gas under different transient oil flows, multiple repeated experiments were conducted to collect the pressure, flow velocity, and heavy gas signals of pipeline oil flow during the transient oil flow impact process, as shown in Figure 14.

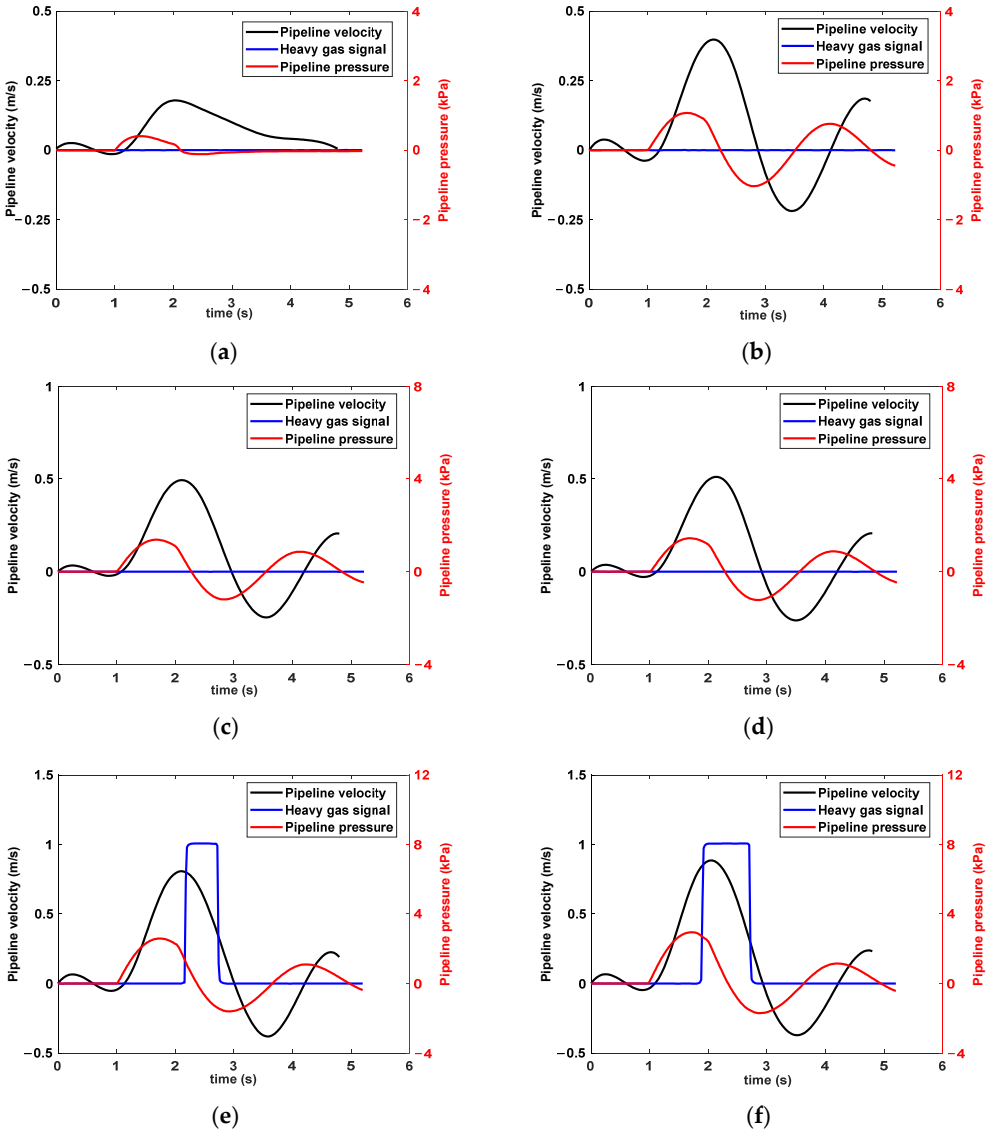

Figure 14. Excitation pressure 0.100 MPa–0.110 MPa flow velocity pressure diagram: (**a**) excitation pressure 0.100 MPa; (**b**) excitation pressure 0.105 MPa; (**c**) excitation pressure 0.107 MPa; (**d**) excitation pressure 0.108 MPa; (**e**) excitation pressure 0.109 MPa; (**f**) excitation pressure 0.110 MPa.

Using the binary method to determine the critical excitation pressure for heavy gas action, set the excitation pressure of the air cannon to 0.100 MPa and 0.110 MPa. When the excitation pressure is 0.100 MPa, the maximum flow velocity of the pipeline is 0.179 m/s, and no heavy gas action occurs at this time; when the excitation pressure is 0.110 MPa, the maximum flow velocity of the pipeline reaches 0.885 m/s, generating a heavy gas action signal, and the flow velocity at the time of heavy gas action is 0.859 m/s. It can be inferred that the critical excitation pressure for heavy gas action is between 0.100 MPa and 0.110 MPa.

When the excitation pressure of the air cannon is set to 0.105 MPa, the maximum flow velocity in the pipeline is 0.398 m/s, and no heavy gas action occurs; when the excitation pressure is 0.107 MPa, the maximum flow velocity of the pipeline is 0.494 m/s, and no heavy gas action occurs; when the excitation pressure is 0.108 MPa, the maximum flow velocity of the pipeline is 0.512 m/s, and no heavy gas action has occurred yet; when the excitation pressure is 0.109 MPa, the maximum flow velocity of the pipeline is 0.808 m/s, indicating the occurrence of heavy gas action, and the flow velocity at the time of heavy gas action is 0.807 m/s.

From this, it can be inferred that 0.109 MPa is the critical excitation pressure for gas relays. When the excitation pressure is less than 0.109 MPa, the gas relay does not undergo heavy gas action; when the excitation pressure is greater than or equal to 0.109 MPa, the gas relay triggers the heavy gas action and cuts off the power supply.

To further investigate the action of BF type double float ball gas relay under different transient oil flow impacts on heavy gas, the excitation pressure of the air cannon was set in the range of 0.109 MPa–0.140 MPa to simulate the transient oil flow of transformers with different degrees of faults. Collect the pressure, flow velocity, and heavy gas signals, and the corresponding curves shown in Figure 15 (where the excitation pressure is 0.109 MPa and 0.110 MPa; see Figure 14).

It can be obtained from Figure 15:

1. As the excitation pressure increases, the pressure and oil flow velocity inside the pipeline will continue to increase, and the impact torque on the baffle will rapidly increase. The interval between the application of excitation and the action of the baffle will continue to shorten, and the duration of heavy gas action will become longer.
2. The peak attenuation rate of pressure is faster than that of the flow velocity, indicating that the transmission speed of pressure is faster than that of the flow velocity. The pressure acts on the baffle before the flow velocity, and the flow velocity has a lag relative to the pressure. As the excitation pressure increases, the lag weakens.
3. According to the law of rapid decay of magnetic force, the magnetic torque at the torque of heavy gas action is much greater than that at the torque of heavy gas end action, and the resultant torque is reversed. It can be concluded that the impact torque of heavy gas action is greater than that of heavy gas end action; that is, the flow velocity of heavy gas action is greater than that of heavy gas end action, which is consistent with theory and experiment.

Extract the pressure and flow velocity corresponding to the heavy gas action, the pressure and flow velocity corresponding to the end of the heavy gas action, and the duration of the heavy gas action from Figure 15 and create Table 5.

Table 5. Pressure and flow velocity values at the action and end of heavy gas.

Stimulating Pressure (MPa)	The Pressure Corresponding to Heavy Gas Action (kPa)	The Flow Velocity Corresponding to Heavy Gas Action (m/s)	The Pressure Corresponding to the End of the Heavy Gas Action (kPa)	The Flow Velocity Corresponding to the End of Heavy Gas Action (m/s)	Duration of Heavy Gas Action (s)
0.109	1.380	0.807	−1.432	0.341	0.60
0.110	2.746	0.859	−1.552	0.291	0.86
0.115	3.345	0.890	−1.723	0.308	1.02
0.120	6.600	0.959	−1.621	0.249	1.56
0.125	8.271	0.977	−1.627	0.238	1.82
0.130	10.630	0.908	0.848	0.260	1.98
0.135	11.387	0.930	−0.130	0.285	2.14
0.140	14.443	0.820	2.153	0.298	2.58

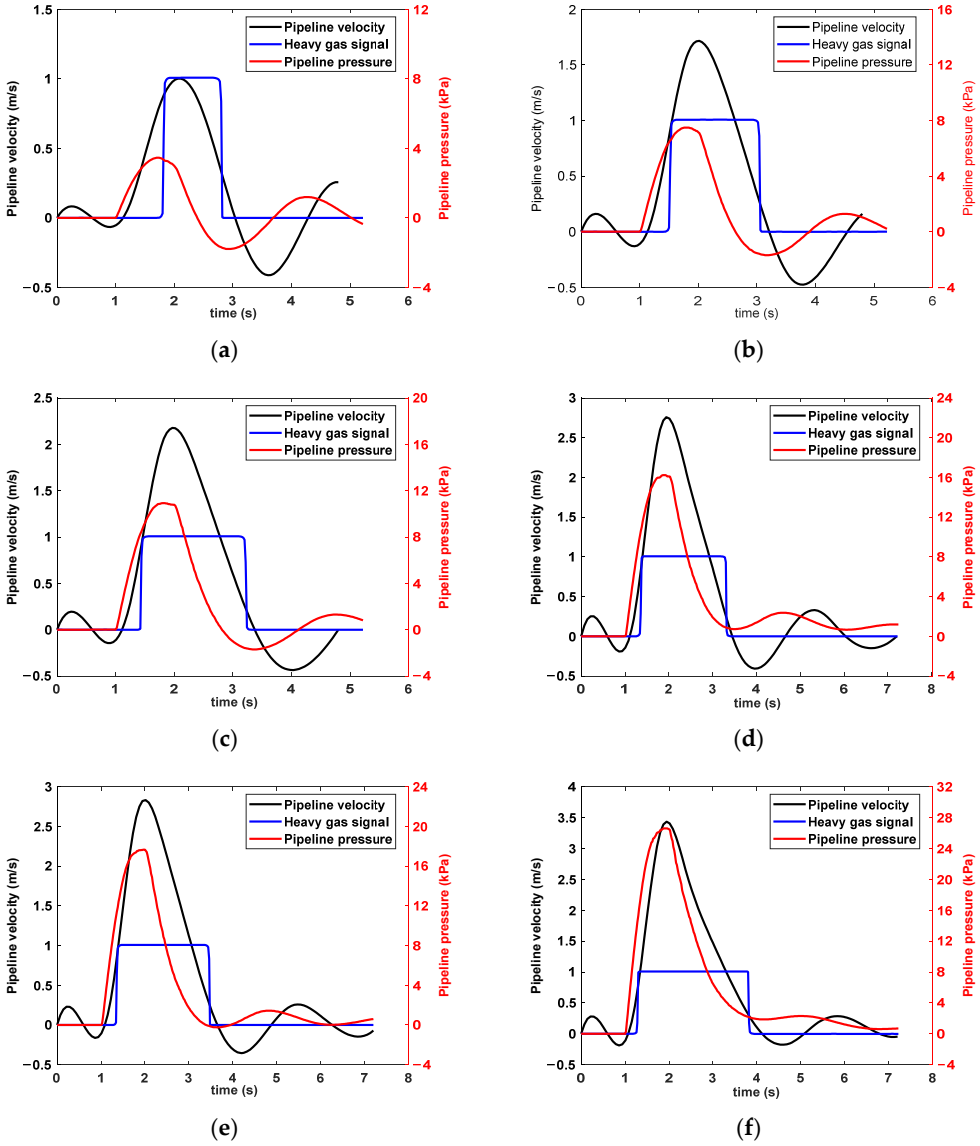

Figure 15. Excitation pressure 0.109 MPa–0.140 MPa flow velocity and pressure diagram: (**a**) excitation pressure 0.115 MPa; (**b**) excitation pressure 0.120 MPa; (**c**) excitation pressure 0.125 MPa; (**d**) excitation pressure 0.130 MPa; (**e**) excitation pressure 0.135 MPa; (**f**) excitation pressure 0.140 MPa.

The pressure and flow velocity corresponding to heavy gas action, as well as the pressure and flow velocity corresponding to the end of heavy gas, are shown in Figure 16.

From Table 2 and Figure 16, it can be concluded that:

1. When the excitation pressure is 0.108 MPa, the maximum flow velocity inside the pipeline can reach 0.512 m/s; When the excitation pressure is 0.109 MPa (i.e., the critical excitation pressure for heavy gas action), the flow velocity of heavy gas action is 0.807 m/s, indicating a significant difference in flow velocity between 0.108 MPa and 0.109 MPa.

The main reason for the significant difference in flow velocity is that when heavy gas is activated, the baffle rotates to its maximum angle, and the resistance generated by the baffle to the oil flow rapidly decreases, increasing flow velocity. On the contrary, when the baffle does not rotate or the rotation angle is small, it exerts greater resistance to the oil flow, resulting in a lower flow velocity.

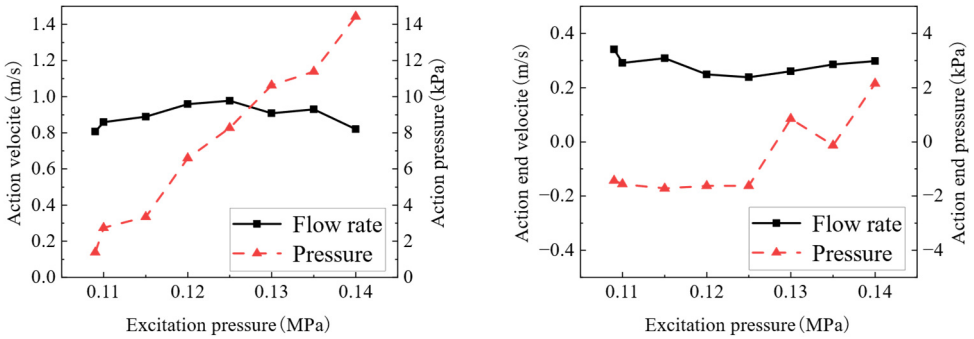

(**a**) (**b**)

Figure 16. Pressure and flow velocity curves of heavy gas under different excitation pressures: (**a**) pressure and flow velocity at heavy gas action; (**b**) pressure and flow velocity at the end of heavy gas action.

Based on this, the flow velocity of 0.80 m/s is set as the setting value for heavy gas action flow velocity, that is, v_{st} = 0.80 m/s. When the excitation pressure is 0.140 MPa, the flow velocity during heavy gas action is 0.82 m/s, reaching the setting value. As the excitation pressure increases, the flow velocity value corresponding to heavy gas action is relatively stable, ranging from 0.80 m/s to 1.00 m/s. However, the pressure value corresponding to heavy gas action is not stable and shows a linear relationship with the excitation pressure. From this, it can be seen that regardless of the degree of internal faults in the transformer, the impact of oil flow velocity inside the transformer is the main factor causing heavy gas action. Based on the setting value of the heavy gas action flow velocity v_{st} = 0.8 m/s, it can comprehensively reflect the actual situation of the heavy gas action of the gas relay.

2. At different excitation pressures, the flow velocity corresponding to the end of heavy gas action stabilizes at 0.30 m/s, but the attenuation amplitude of the pipeline pressure is extremely large. Based on this inference, the oil flow velocity is the key factor in maintaining the gas relay baffle in an open state; that is, the heavy gas action of the gas relay relies on oil flow to maintain it in the later stage.
3. According to the parameters of the gas relay nameplate, the setting value of heavy gas action is 1.00 m/s. However, the flow velocity setting value obtained through the experiment is 0.80 m/s, which is smaller than the setting value of the nameplate.

The setting value of the nameplate is carried out in the environment of steady-state oil flow impact, and the impact torque in the experiment is transient. Compared with the steady-state impact torque, in the initial stage of nonlinear changes in oil flow velocity, the flow velocity will increase rapidly, and this rapidly increasing flow velocity will generate a larger pressure gradient, increasing the impact torque of the oil flow on the thin film. At the same time, when the flow velocity changes rapidly, the momentum of the fluid will undergo significant changes, and the drag force will also increase rapidly. This series of changes will lead to an increase in the impact torque, so the flow velocity required to achieve the same impact torque will decrease. This explains why the experimental setting value is smaller than that of the nameplate.

6. Discussion

The main research result of this article is that under transient oil flow impact conditions, the flow velocity setting value of the BF type double float ball gas relay is smaller than the factory flow velocity setting value (the factory setting value is obtained based on approximately steady-state oil flow conditions). The research conducted in this article did

not change the structure of the gas relay, so it will not affect the operation process of the gas relay. The BF type double float ball gas relay with a factory setting value of 1.0 m/s was selected in the experiment, and the flow velocity setting value of the BF type double float ball gas relay under transient oil flow impact obtained through the experiment was 0.8 m/s, which is approximately 80% of the factory value. This result may lead to the actual flow velocity (transient flow velocity) not reaching the factory setting value (steady-state oil flow) and the gas relay causing heavy gas action, that is, heavy gas misoperation, which affects the reliability of transformer heavy gas protection. Therefore, to improve the reliability and sensitivity of heavy gas protection for oil-immersed transformers, it is recommended that the heavy gas setting of gas relays be set according to transient oil flow conditions when they leave the factory.

7. Conclusions

This article focuses on the research of the heavy gas action characteristics of BF type double float ball gas relays. Through theoretical and experimental analysis under different transient oil flow impacts, the following conclusions are drawn:

1. The force situation of the BF type double float ball gas relay baffle has a critical impact on its operating state, and the permanent magnet magnetic force is the main resistance acting on the baffle, which will rapidly decay when the baffle rotates. To overcome the magnetic force of the permanent magnet on the baffle in the initial state, a large impact force is required. The baffle begins to rotate; only a small impact force is needed to maintain the baffle in a rotating state.
2. During the heavy gas operation of the gas relay, the transmission speed of pressure is faster than the flow velocity, and the flow velocity has a lag relative to the pressure. As the excitation pressure increases, the duration of heavy gas action increases, showing a linear trend. The flow velocity setting value of the BF type double float ball gas relay is 0.80 m/s. Regardless of low-energy excitation or high-energy excitation, flow velocity is the main factor causing heavy gas action and maintaining the baffle in an open state.
3. The different states of oil flow impact have a significant impact on the flow velocity setting value of gas relays. Compared with steady-state oil flow impact, transient oil flow impact generates a larger pressure gradient, causes significant changes in fluid momentum, and rapidly increases drag force, resulting in an increase in impact torque and a decrease in flow velocity required to achieve the same impact torque. The flow velocity setting value of BF type double float ball gas relay under transient oil flow impact is less than that of the nameplate.

When the gas relay leaves the factory, the heavy gas setting is carried out according to the conditions of transient oil flow. The recalibrated gas relay can improve the reliability of heavy gas protection for oil-immersed transformers, thereby enhancing the safety and stability of transformer operation. The new setting method has great potential application value.

The shortcomings of the research work in this article: the influence of temperature and viscosity on the setting value of gas relay flow velocity under transient oil flow impact was not considered. In the future, further research will be conducted on the correlation between parameters such as transformer oil temperature and viscosity and the flow velocity setting value of gas relays.

Author Contributions: Conceptualization, S.W. and C.L.; methodology, S.H.; software, T.Z.; validation, T.Z. and C.Z.; formal analysis, C.L. and B.X.; resources, S.W.; data curation, C.L.; writing—original draft preparation, C.Z.; writing—review and editing, S.W.; visualization, B.X.; supervision,

S.W.; project administration, S.W.; funding acquisition. C.L. All authors have read and agreed to the published version of the manuscript.

Funding: This work is supported by China Yangtze Power Co., Ltd. (Z152302033).

Data Availability Statement: The data presented in this study are available on request from the corresponding author.

Acknowledgments: The authors thank the editor for the editing assistance. In addition, the authors would like to thank the reviewers for their valuable comments and suggestions on an earlier version of our manuscript.

Conflicts of Interest: Authors Chengxiang Liu, Chunhui Zhang and Bo Xu was employed by the China Yangtze Power Co., Ltd. The remaining authors declare that the research was conducted in the absence of any commercial or financial relationships that could be construed as a potential conflict of interest.

References

1. Wang, Z.Y.; Yan, P. Different Excitation Pressures Correspond to The Pressure and Flow Rate at The End of The Heavy Gas Action. *High Volt. Eng.* **2005**, *31*, 87–88.
2. An, S.Y. Analysis and Improvement of Malfunction of The Gas Relay. *Transformer* **2023**, *60*, 72–75.
3. Zhang, W.Q. Reason and Judgment of Transformer Gas Protection Action. *Electrotech. Appl.* **2001**, *1*, 54.
4. Ding, C.; Chen, W.; Yu, D.; Yan, Y. Research on Transformer Condition Prediction Based on Gas Prediction and Fault Diagnosis. *Energies* **2024**, *17*, 4082. [CrossRef]
5. Luo, J.; Zhou, L.H.; Zhu, H.X.; Deng, Y.X.; Yang, D.L.; Su, C.; Liu, S.G. Troubleshooting and Preliminary Cause Analysis of Light Gas Alarm with Rheology. *Electr. Power Equip. Manag.* **2024**, *16*, 65–67.
6. Zhang, Q.J.; Zhu, D.L.; Hong, W.H.; Xia, Z.J. Analysis on Frequent Light Gas Alarm of 220 kV Transformer. *Electr. Eng.* **2018**, *08*, 28–29.
7. Li, N.W. Cause Analysis and Countermeasures of a Transformer Gas Protection Action. *Electr. Eng.* **2021**, *23*, 102–104.
8. Hou, W.J.; Qu, G.L.; Zheng, X.L.; Liu, J.F. Vibration Analysis of Gas Relay Misoperation. *Transformer* **2018**, *55*, 44–48.
9. Li, L.; Wang, J.B.; Xu, X.; Zhang, B.; Lu, T. Simulation Research for Preventing Malfunction of Heavy Gas in Compact Transformer. *High Volt. Appar.* **2017**, *53*, 186–191+197.
10. Zhao, T.Y.; Zhu, J.J.; Zhu, T.; Yang, F. Cause Analysis on Heavy Gas Maloperation of On-load Tap Changer of 35 KV Main Transformer. *Electr. Eng.* **2019**, *4*, 64–65.
11. Aciu, A.-M.; Enache, S.; Nițu, M.-C. A Reviewed Turnat of Methods for Determining the Type of Fault in Power Transformers Based on Dissolved Gas Analysis. *Energies* **2024**, *17*, 2331. [CrossRef]
12. Vita, V.; Fotis, G.; Chobanov, V.; Pavlatos, C.; Mladenov, V. Predictive Maintenance for Distribution System Operators in Increasing Transformers' Reliability. *Electronics* **2023**, *12*, 1356. [CrossRef]
13. Mateus, B.C.; Farinha, J.T.; Mendes, M. Fault Detection and Prediction for Power Transformers Using Fuzzy Logic and Neural Networks. *Energies* **2024**, *17*, 296. [CrossRef]
14. Li, Y.H.; Liu, B.; Wang, G.S.; Fang, B. Cause Analysis and Protection Measures of A 500kV Main Transformer Fault. *Transformer* **2020**, *57*, 85–87.
15. Jin, L.; Lu, F.; Zhou, K.; Luo, W.; Liu, R. Fault Diagnosis and Analysis of 220kV Transformer Vacuum OLTC. *Transformer* **2021**, *58*, 84–87.
16. Yan, C.; Xu, C.; Liu, H.; Guo, J.; Zhang, P.; Xu, Y.; Zhou, X.; Zhang, B. Research on Oil Pressure Rise and Fluctuation Due to Arcing Faults Inside Transformers. *IEEE Trans. Power Deliv.* **2023**, *38*, 1483–1492. [CrossRef]
17. Tadokoro, T.; Kotari, M.; Ohtaka, T.; Iwata, M.; Amakawa, T. Pressure Rises Due to Arc under Insulating Oil in Closed Vessel Pressure Fluctuation of Depth Direction in Oil. *Electr. Eng. Jpn.* **2018**, *202*, 43–53. [CrossRef]
18. Yan, D.; Ma, R.; Yang, H.; Liang, Y. Analysis correlation modeling of the oil flow of transformer and temperature. In Proceedings of the 5th International Conference on Electric Utility Deregulation and Restructuring and Power Technologies, Changsha, China, 26–29 November 2015.
19. Luo, C.; Zhu, Y.; Li, Z.; Yu, P.; Zhou, Z.; Yang, X.; Liao, M. Diffusion Characteristics of Dissolved Gases in Oil Under Different Oil Flow Circulations. *Energies* **2025**, *18*, 432. [CrossRef]
20. Laburú, F.M.; Cabral, T.W.; Gomes, F.V.; de Lima, E.R.; Filho, J.C.S.S.; Meloni, L.G.P. New Insights into Gas-in-Oil-Based Fault Diagnosis of Power Transformers. *Energies* **2024**, *17*, 2889. [CrossRef]

21. Lins, I.X.; Lima Filho, H.J.; dos Santos, V.A.; Pereira, J.C.; Mak, J.; Vieira, C.W. Hydrodynamic Study of The Oil Flow in A Protective Relay Coupled to A Power Transformer: CFD Simulation and Experimental Validation. *Eng. Fail. Anal.* **2021**, *128*, 105599. [CrossRef]
22. Ding, G.C.; Yang, H.T.; Li, B.Y.; Wu, X.; Hu, X.; Wu, J. Study on Operation Characteristics Test of Gas Relay with On-load Tap Changer. *High Volt. Appar.* **2023**, *59*, 156–161.
23. Li, B.; Hao, Z.; Li, S.; Pan, S.; Xiong, J.; Zhang, B. Response Characteristics of The Buchholz Relay and Novel Non-electric-parameter Protection Methods. *IEEE Trans. Power Deliv.* **2023**, *38*, 4103–4113. [CrossRef]
24. Wan, S.T.; Wei, J.L.; Lü, P.R. Oil-Immersed Transformer Operation State Monitoring Method Based on Gas Relay Baffle Angular Characteristics. *Power Syst. Technol.* **2021**, *45*, 417–423.
25. Wan, S.T.; Wei, J.L.; Lü, P.R. Oil-Immersed Transformer Non-electrical Protection Method Based on the Initial Angular Acceleration of Gas Relay Baffle Rotation. *High Volt. Eng.* **2021**, *47*, 2498–2505.
26. Wan, S.T.; Zhang, Z.H.; Lü, P.R. Recognition Method for Transformer Heavy Gas Fault Degree Based on Gas Relay Baffle Operating Time Characteristic. *Power Syst. Technol.* **2022**, *46*, 1965–1972.
27. Wan, S.T.; Zhang, Z.H.; Li, S.P. A New Method for Heavy Gas Alarm Based on the Rotational Angular Velocity of a New Type of Gas Relay Baffle. *Electr. Power Syst. Prot. Control* **2022**, *50*, 152–159.
28. Yan, C.G.; Xu, C.; Cao, P.; Gao, K.; Zhu, S.; Wei, Y.; Wu, J.; Li, L. Study on Transient Motion Characteristics of Gas Relay for Power Transformers. *New Electr. Power Technol.* **2022**, *41*, 1–7.
29. Jia, W.; Sun, W.; Zhang, H.; Gong, M.; Xu, C.; Sheng, J.; Qu, L. Research on Characteristics and Calibration Method of Gas Relay of Power Transformer in Power Grid. In Proceedings of the 7th International Forum on Electrical Engineering and Automation, Hefei, China, 25–27 September 2020.
30. Li, S.N.; Lan, H.; Zhou, X.; Zhang, S.; Han, D.; Liu, M. Internal Flow Field Simulation and Maloperation Cause Analysis of BF-Type Gas Relay. *Electr. Energy Manag. Technol.* **2016**, *19*, 12–17.
31. Li, S.N.; Liu, M.L.; Zhou, X.; Zhang, S.; Lan, H.; Han, D. Simulation of Buchholz Relay Internal Flow Field Using Fluent Dynamic Mesh Method. *Energy Res. Inf.* **2018**, *34*, 164–168.
32. Wang, D.; Yan, F.; Hao, L.P. Internal Oil Flow Analysis of Gas Relay Based on CFD. *Guangxi Power* **2018**, *41*, 70–72.
33. Li, S.N.; Han, D.D.; Zhou, X. Research on Reverse Oil Flow Action of Gas Relay Based on CFD. *Energy Res. Inf.* **2020**, *36*, 222–227.
34. Lan, H.; Zhang, S.Q.; Yu, F.R.; Li, D.; Han, D.; Liu, X. Calibration of Oil Flow Setting Value for BF-Type Double Float Gas Relay Based on CFD. *China Power* **2016**, *s1*, 1–5.

Disclaimer/Publisher's Note: The statements, opinions and data contained in all publications are solely those of the individual author(s) and contributor(s) and not of MDPI and/or the editor(s). MDPI and/or the editor(s) disclaim responsibility for any injury to people or property resulting from any ideas, methods, instructions or products referred to in the content.