energies

MDPI

Review

An Extensive Review and Analysis of Islanding Detection Techniques in DG Systems Connected to Power Grids

Mohammad Abu Sarhan

Department of Power Electronics and Energy Control Systems, Faculty of Electrical Engineering, Automatics, Computer Science and Biomedical Engineering, AGH University of Science and Technology, 30-059 Kraków, Poland; sarhan@agh.edu.pl

Abstract: Nowadays, the integration of distributed generators with the main utility grid is highly increasing due to the benefits which can be obtained, such as increasing the system efficiency and reliability. Apart from that, many technical and safety issues appear in the system due to this integration. One of these issues is the islanding condition, which has to be detected effectively and quickly before having any detrimental effects on the protection, stability, and security of the system. This study provides a detailed overview of several islanding detection approaches, which are divided into traditional methods, including local and remote methods, and modern methods, including methods based on signal processing and computational intelligence. Moreover, a comparison between each method based on various criteria, such as non-detected zone, quality factor, response time, implementation cost, degrading power quality, reliability, suitability for the type of distributed generators, suitability for multi-distributed generators system, and sensitivity to cyber-attacks, is carried out. Therefore, this review will offer a solid background in order to help researchers interested in this field distinguish between islanding detection methods and their relative advantages and disadvantages, as well as to be able to choose the most suitable islanding detection method among the others to be implemented in the network.

Keywords: point of common coupling; distributed generation; islanding detection

check for updates

Citation: Abu Sarhan, M. An Extensive Review and Analysis of Islanding Detection Techniques in DG Systems Connected to Power Grids. *Energies* **2023**, *16*, 3678. https://doi.org/10.3390/en16093678

Academic Editor: Javier Contreras

Received: 7 March 2023
Revised: 18 April 2023
Accepted: 23 April 2023
Published: 25 April 2023

1. Introduction

In electrical power systems, the normal operation requires providing a power supply to the end users without any kind of interruption or distortion. However, due to many factors, such as faults and switching events, it is difficult to achieve this normal operation in a practical power system. Such kinds of abnormal conditions and events have to be recognized and classified for various purposes, such as mitigation, protection, and analysis purposes.

Present-day power networks are gradually incorporating more renewable energy sources due to numerous economic and environmental factors. In order to create a smart distribution system where the power flow is not unidirectional because the distributed renewable energy resources (DG) can produce the power and feed it back to the grid, the distributed renewable energy resources (DG), e.g., photovoltaic, wind turbines, and biomass, are connected to the main grid through a power electronic interference. There are many benefits to integrating DG into the main grid, including increased system productivity, better power quality, lower power losses, and lower gas emissions. On the second hand, this integration may lead to various operational issues related to system stability and reliability, such as reverse power flow and islanding issues.

Hence, the electrical power system has to be improved by using different technologies that help to integrate DG and end users' actions to increase the ability to deliver more economical, sustainable, and secure power supplies.

The islanding phenomenon happens as indicated in Figure 1 when the utility grid is cut off from the DG, yet the power supply is still being delivered to the end customers.

In this case, this phenomenon has to be sensed during the absence of utility-controlled generation to cease energizing the grid. Otherwise, if the generation in the islanding area operates exceeding the normal voltage and frequency levels, the equipment can be damaged, and the energized lines can cause a shock hazard to workers who think the lines are not energized.

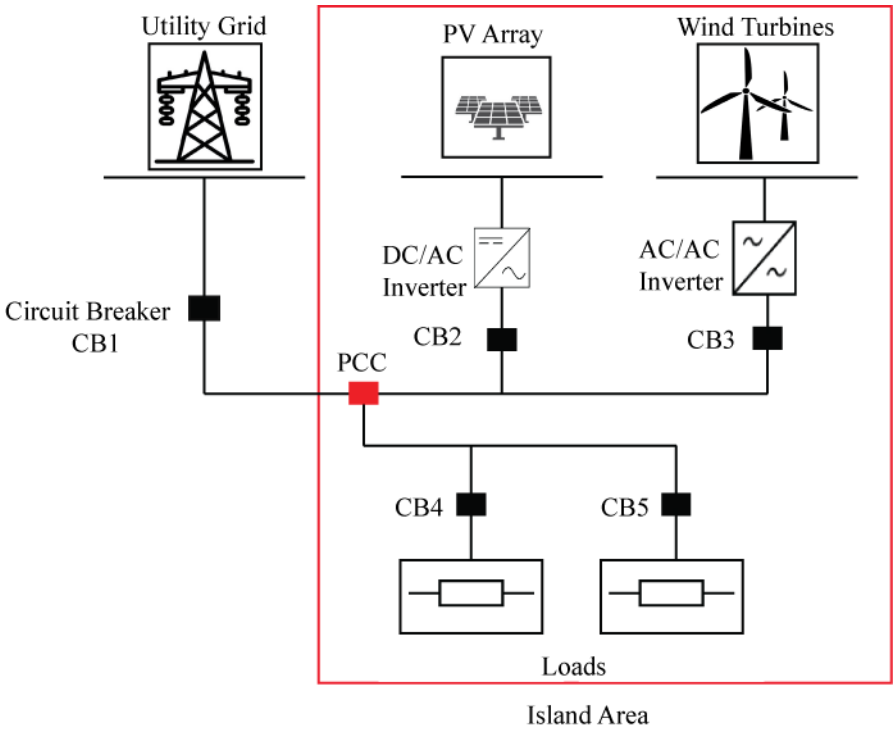

Figure 1. Islanding Mode in Micro-grid.

Islanding can occur either intentionally or unintentionally. The system is well-designed to handle the parameters altering in the case of intentional islanding, and the DG controls the fluctuating voltage and frequency. The DG is not suited to manage the voltage and frequency when the islanding is unintentional. The distribution grid continues to receive power from the DG even though the voltage and frequency may have exceeded the permitted limits, opening the switching mechanism between the DG and the rest of the utility grid.

Numerous islanding detection techniques have been developed and proposed. The islanding detection methods can be broadly divided into two groups: traditional methods and modern methods. These include active, passive, and hybrid local islanding detection methods, remote islanding detection methods, signal processing-based methods, and computationally intelligent-based methods. The local methods basically depend on measuring the parameters of the system at the DG, whereas remote methods rely on the main grid and DG's communication link. Signal processing-based methods depend on feature extraction, and computational intelligent methods depend on data training and pattern recognition. The methods used to detect islanding still have several limitations and downsides, such as the failure to detect islanding when a non-detected zone (NDZ) is present, the issues related to system stability and power quality, false operation in case of multiple DG, the requirement of installing additional equipment or circuits, and high implementation cost.To get over these restrictions and downsides, more islanding detection method research and development is needed [1].

Reviewing the widespread usage of islanding detection techniques in DG grid-connected systems is the primary goal of this work. Each islanding technique's fundamental work will be presented. Moreover, a comparison based on the advantages and disadvantages

of each method is carried out. Later on, a conclusion is provided. Furthermore, this work compared to other current existing reviews provides a more solid background to researchers and experts who are looking forward to getting up-to-date knowledge about islanding detection methods, because this work highlights and discusses the majority of islanding detection methods that have not been discussed and covered by other literature in detail. In addition, more criteria, such as reliability and sensitivity to cyber-attacks, which affect the islanding detection methods selection, have been discussed here and are absent in other works.

2. Islanding Detection Methods

There are a number of essential aspects that can be used to assess how well islanding detection approaches work. The non-detected zone (NDZ) is the most prevalent feature, while the Q factor is the second. Due to the disparity in power supply and load, NDZ is regarded as the region where islanding cannot be identified. The islanding detection approach fails to detect the islanding during the required time interval if the mismatch of active and reactive power between the DG-generating power and load-consuming power (ΔP, ΔQ) is too small [2]. The ratio of the maximum stored energy to the energy lost every cycle at a specific frequency, multiplied by two (π), is known as the Q factor and mathematically calculated as:

$$Q = R\sqrt{(C/L)}, \tag{1}$$

where, R, C, and L are the resistance, capacitance, and inductance of load respectively.

The Q factor can be affected by the local load and when its value is high, the time of islanding detection can be delayed. According to the load type, non-linear loads cannot make islanding identification harder since they emit continuous power and current harmonics. The relationship between the Q factor and NDZ is proportional as presented below:

$$(V/V_{max})^2 - 1 \leq (\Delta P/P) \leq (V/V_{min})^2 - 1, \tag{2}$$

$$Q\,(1 - (f/f_{min})2) \leq (\Delta Q/P) \leq Q\,(1 - (f/f_{max})2), \tag{3}$$

where, f_{min}, f_{max}, V_{min}, and V_{max} are the minimum and maximum frequency/voltage respectively. P and V are the nominal active power and voltage, while Q is the Q factor.

Hence, if the Q factor is high, then NDZ can be larger. Therefore, for efficient and accurate islanding detection, NDZ and Q factor value must be reduced [1].

The classification of islanding detection methods has several categories, local (passive, active, and hybrid methods) and remote methods, signal processing based methods, and computational intelligent based methods, as shown in Figure 2. The description of each method is presented below:

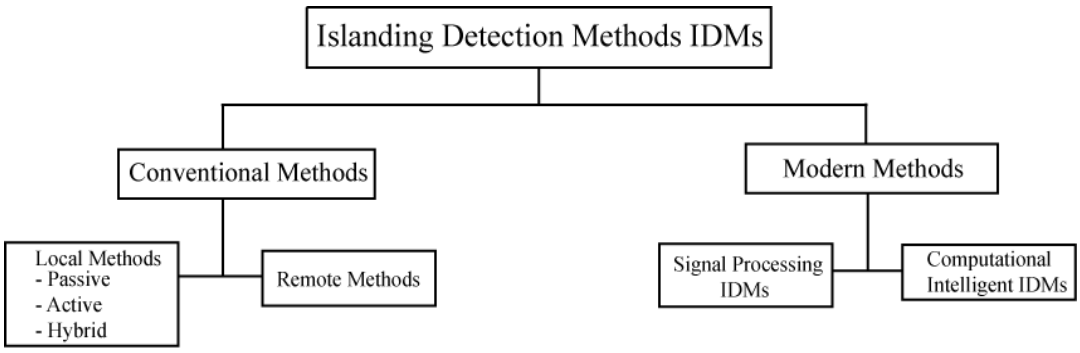

Figure 2. Islanding Detection Methods Categories.

2.1. Passive Methods

Passive methods' primary work is dependent on the measurement of system parameters at the point of common coupling (PCC), such as voltage, current, frequency, power, or impedance. When the islanding occurs, significant variations of those parameters which exceed the allowed threshold values are observed. Protective relays monitor the variations and activate the main circuit breaker if necessary. Passive methods include various techniques, such as over/under voltage protection (O/UV) or over/under frequency protection (O/UF), the rate of change of frequency (ROCOF), the rate of change of active and reactive power (ROCOP), voltage unbalance (VU), and phase jump detection (PJD) [3]. The power quality and grid operation are not affected during the implementation of passive methods. NDZ is larger than other systems. However, the detecting speed is slower. Below are thorough explanations of passive techniques.

2.1.1. Over under Voltage/Over under Frequency Method (O/UV or O/UF)

In O/UV or O/UF methods, standard protective relays are connected to the grid to detect abnormal conditions such as Islanding that happen during the operation of the main utility network. The protective relays engage to prevent the PV inverters from supplying electricity to the nearby loads if the frequency value and voltage amplitude at PCC exceed the limits. The difference in active and reactive power between the load and the DG just before the switch opens to create the island affects how the system behaves when the utility grid is cut off. If the difference of active power between DG and load (ΔP) does not equal zero, a change in voltage amplitude will be observed and detected to prevent islanding. However, if the reactive power difference (ΔQ) between the load and the DG is not zero, there will be a phase shift in the load voltage, which will deviate from the inverter current frequency and cause the DG to be disconnected [4].

Such methods are simple and cost-effective, because both voltage and frequency are considered. Different standards, including IEEE and IEC, determine the maximum and minimum voltage and frequency. When the system parameters cross this limit, the system will operate as an islanding condition within a time range from 4 ms to 2 s which makes this method appropriate for systems with some certain power imbalance [5,6].

2.1.2. Rate of Change of Frequency Method (ROCOF)

This method uses the variation in frequency (df/dt) that happens when the primary utility grid is disconnected with a specific power mismatch to detect islanding and trigger the inverter over a few cycles. A phase-locked loop (PLL) is used to measure the change in frequency df/dt over a brief amount of time so that it may be compared to the established threshold value, which states that the tripping time of frequency relays should not be more than 4–6 cycles [7,8].

This method is highly reliable and timely, especially when there is a significant power imbalance between the load and DG. However, this approach is extremely susceptible to variations in load, which is why it fails to differentiate whether the frequency change occurs due to islanding or load variations. Hence, it can be an appropriate method for loads with fewer fluctuations [8].

2.1.3. Rate of Change of Active and Reactive Power Method (ROCOP)

Because load variations will occur when the grid is lost, this approach tracks the change in DG power (dP/dt) for a certain time integral. When islanding happens, the power dP/dt changes significantly more than it does when it is measured beforehand. Over a few sample cycles, the dP/dt will be measured when the utility grid is cut off. Therefore, the DG will be shut off to stop powering the load when the change in power exceeds the permitted limits [9].

The power discrepancy between the load and DG has no impact on the ROCOP's detection speed. To maintain the stability of the power system's functioning, it is also possible to quickly detect the unsynchronized reconnection of the utility supply to DG. In

this scenario, this approach still has NDZ when the power between the load and DG is balanced. However, this method will become increasingly effective to identify the islanding condition as the power imbalance increases.

2.1.4. Voltage Unbalance Method (VU)

According to this method, the three-phase voltages at PCC are used to identify the islanding condition. A voltage imbalance of the DG output will result from the loss of the primary utility grid. The islanding procedure will be decided if the voltage unbalances are greater than the threshold value. The voltage unbalance (VUt) is calculated as the negative sequence component voltage (NSt) over the positive sequence component voltage (PSt) as presented below [10].

$$VUt = NSt/PSt, \tag{4}$$

This method has low detection error, and it is not also sensitive to system fluctuations. However, the NDZ is large relatively [11].

2.1.5. Phase Jump Detection Method (PJD)

This method involves keeping an eye on the phase difference between the voltage and current of the DG output during an abrupt phase leap. The inverter current stays the same under islanding conditions, but the voltage will swing its route due to the phase difference, which is detected using modified PLL. Therefore, a phase difference will occur due to the change in voltage path and the inverter will be disconnected when the voltage jump exceeds the acceptable value [12].

This method which does not affect power quality is easy to implement and its detection speed is fast. The time of detection is around 10 ms to 20 ms [13]. On the other hand, in this method, the threshold is not easy to choose due to the load switching, which may cause some errors in the islanding detection.

2.1.6. Total Harmonic Distortion Method (THD)

The fundamental tenet of this approach is based on the PCC's measurement of total harmonic distortion (THD), which provides a clue to the existence of an islanding scenario. The harmonics produced by the inverter and transmitted to the grid do not create any distortion at PCC when the main grid is connected since the grid impedance is low. However, when islanding occurs, the inverter's current harmonics are passed to the load, causing harmonic distortions at the PCC, and if they surpass a threshold value, islanding will be recognized [14].

This approach is simple to use and works even when the system has several inverters connected in parallel. However, setting the threshold value is not easy because any disturbance in the grid can cause error detection.

2.1.7. Rate of Change of Frequency over Power Method (ROCOFOP)

This approach measures the df/dp, where dp is the load power, to identify islanding. The df/dp is more sensitive than the rate of frequency over time when the load and DG have a slight power mismatch. As a result, this approach works effectively when there is a slight power imbalance between the load and the DG [15].

2.2. Active Methods

The primary idea behind active techniques is to modify the DG output by adding an external minor disturbance signal. The system parameters change under the islanding conditions as a result of this injection. When various passive approaches fail to detect islanding, such as when there is a power balance between DG output and load consumption, active methods can detect the islanding state successfully. However, while using these techniques, the system may experience issues with harmonic distortion and power quality. Below is a basic explanation of active approaches.

2.2.1. Active Frequency Drift Method (AFD)

By using the inverter, this technique injects a slightly distorted current signal into the PCC. Because the voltage and frequency at the DG terminal are constant when the main grid is connected, the system is stable. The injected signal creates a zero crossing of the voltage when the islanding situation arises, which increases the phase error between the output voltage and the inverter current. The observed frequency drift of the inverter output current thereby eliminates the phase inaccuracy. When the frequency reaches the threshold value and the frequency drifts again, the islanding condition is detected [16].

The chopping fraction describes the distorted current signal of the inverter which is defined in the following equation:

$$CF = 2t_z/T_{vutil}, \tag{5}$$

where, T_{vutil} is voltage period and t_z is the dead time.

This method's key benefit is that it is simple to use and has a minimal NDZ. Because different inverters have distinct deviations in frequency bias, this approach might not be able to detect islanding when there are many inverters present. The efficiency of this strategy is also significantly influenced by the type of loads. The detection time and NDZ will rise if the load is not a resistive load. As a result, this approach works best for islanding detection in systems with just one inverter and resistive loads.

2.2.2. Sandia Frequency Shift Method (SFS)

This technique, which applies positive feed-back to the frequency of the inverter voltage, is seen as an extension of the AFD technique [17]. When islanding happens, the frequency change introduces an inverter phase angle error, which persists until it exceeds the threshold value. In this method, the islanding detection effectiveness depends on the selection of parameters, such as chopping frequency Cf_o and accelerating gain k. The SFS parameters can be given as:

$$\theta_{inv} = \pi(Cf_o + k(f - f_n)), \tag{6}$$

where θ_{inv} is the inverter phase angle, f is the islanding frequency, f_n is the nominal frequency, and Cf_o and k are the SFS parameters.

This method has the ability to detect the islanding within 6 cycles [18]. When compared to other active approaches, it has the smallest NDZ. Moreover, SFS efficiently reduces the impact of system transient response indetecting efficiency and power quality.

2.2.3. Sandia Voltage Shift Method (SVS)

This approach's fundamental idea is comparable to the SFS method, which depends on amplifying positive feedback to the voltage at the PCC. There are no noticeable changes when the main grid is connected. However, a voltage shift that is noticed and magnified by the positive feedback exceeds the threshold value when the main grid is unplugged, causing the O/UV relay to trip the system [19].

The NDZ of this straightforward approach is modest. However, this technology has the potential to reduce the quality of the power.

2.2.4. Impedance Measurement Method (IM)

In this method, the islanding can be detected through the impedance change of inverter output that caused due to the loss of the main power source and leads to voltage change as a result of current perturbation. This change is monitored by calculating dv/di as impedance observed from the inverter to detect the islanding. This method has a small NDZ in the case of a single DG source, but the detection effectiveness can be declined in the case of multiple inverters. Moreover, the impedance threshold value cannot be set easily because the exact value of grid impedance has to be known [20].

2.2.5. Slip Mode Frequency Shift Method (SMFS)

In this method, the voltage phase of the DG terminal is perturbed with positive feedback, and the frequency deviation is monitored to detect the islanding condition. The voltage and current phase angle of the DG which changes with the frequency in a sinusoidal form is presented as [21]:

$$\theta_{SMFS} = \theta_m \sin((\pi/2)(f^{k-1} - f_n/f_m - f_n)), \quad (7)$$

where f_n is the nominal frequency, f^{k-1} is the earlier cycle frequency, and θ_m is the highest phase angle at the frequency f_m.

When the main grid is connected, the DG operates at the frequency with zero phase angle. However, when the main grid is disconnected, the DG voltage and frequency will be varied, and the error of phase angle will be increased. Therefore, the DG will be unstable to operate at the nominal frequency and the frequency disturbance will be further enhanced by the uncertainty which moves the system to operate in another operation condition either over or under the frequency range.

The SMFS is simple to implement and it has a smaller NDZ compared to other active methods. Moreover, in the case of multiple inverter systems, the effectiveness of this method is high. On the other hand, when SMFS is applied, the power quality of the grid can be reduced, and the system's transient stability can be affected.

2.2.6. Variation of Active and Reactive Power Method

By varying the injected inverter power and monitoring changes in voltage amplitude and frequency, islanding can be detected using this method. When the main grid is cut off, the generated active power by DG is absorbed by the load, and the voltage change must satisfy the following equation to achieve a complete balance between the DG active power and load:

$$P_{DG} = P_{Load} = V^2/R, \quad (8)$$

Therefore, islanding will be identified if the voltage change exceeds the threshold value. Similar to how the reactive power disturbance affects the frequency change, islanding is seen when the frequency surpasses the threshold value [22].

This method's implementation is simple, and the NDZ is little. However, employing this approach can have an impact on the system's power quality and transient stability. In addition, the effectiveness of this method declines when the system consists of multiple inverters connected in parallel.

2.2.7. Negative Sequence Current Injection Method (NSC)

This method involves injecting a negative sequence current into the system to track the PCC's negative sequence voltage and identify an islanding condition. Due to only offering low impedance while the main grid is connected, the injected negative sequence current that flows into the load will not alter the voltage at PCC. However, if the main grid connection is severed, the injected negative current will flow to the load and cause an unbalanced voltage at the PCC. If this voltage exceeds the threshold, the islanding will be detected in accordance with the established criteria [23]. NDZ is not presented using this method and the load change doesn't affect the effectiveness of NSC.

2.2.8. Frequency Jump Method (FJ)

There are certain dead zones present in the perturbing current signal in this approach, which is similar to AFD. The dead zones are injected once every three cycles of the DGs output current waveform. The frequency of voltage will not change under normal circumstances, but it will alter if the main grid is lost. This approach is regarded as an improved version of the active frequency drift approach. However, if the system includes numerous inverters linked in parallel, FJ may not be able to identify the islanding [24].

2.2.9. Phase-Locked Loop Perturbation Method (PLL)

By adding the second harmonic components to the inverter reference current, this technique relies on constructing a modified current reference angle. When the main grid is linked, the main grid stabilizes the voltage, which prevents any discernible changes in the generated current. However, when the main grid connection is lost, due to the introduction of second harmonic components, a variation in the voltage at the PCC can be identified, and as a result, the islanding may be identified appropriately [25].

Various types of PLL can be used for islanding detection. Some methods involve modifying the PLL to continually shift the steady equilibrium point and other methods modifying the characteristics of the PLL small-signal to get the instability performance monotone during the islanding conditions. The modified PLL with a small-signal feed-forward loop is encouraging because the impact of the feed-forward loop can be decoupled by the stiff grid to secure the stability of the PLL in grid-tied environments [26].

This technique, which can be applied to systems with several parallel-connected inverters, has a tiny NDZ and a small detection error rate. However, compared to other active methods, this method may cause a small disturbance when the main grid is connected.

2.2.10. Virtual Capacitor/Inductor Method

By using frequency amplitude that is lower or greater than the nominal frequency, the grid-connected inverter in this manner acts as a virtual capacitor or inductor. Therefore, even though there is a balance between generation and consumption, this virtualization causes the load voltage or frequency to change when the main grid is unplugged. This method has a fast response to detect the islanding, but it can degrade the power quality [27,28].

2.3. Hybrid Methods

The primary goal of active approaches is to reduce the potential NDZ that can arise when employing passive methods, which subsequently improves the precision of islanding detections. However, adopting active approaches will result in issues with system power quality due to the gradual introduction of disturbance signals into the system. Therefore, hybrid approaches are created by fusing the benefits of both passive and active methods in order to solve these issues. Below is a discussion of the hybrid islanding techniques.

2.3.1. Voltage Unbalance and Frequency Set-Point Method

Voltage imbalance is used as a passive approach and positive feedback as an active method in the design of this method. It is common practice to monitor the inverter's output voltages in order to gauge voltage unbalance. Each time an event occurs, DGs are subjected to disturbances, and the voltage unbalance increases. Islanding will be recognized if this jump exceeds the set values. Using this technique, it is possible to distinguish between load-switching events and islanding circumstances [29].

2.3.2. Voltage and Real Power Shift Method

This method's passive component is the average rate of voltage change, and its active component is the real power shift. At the DGs side, the voltage signal is routinely observed, and islanding is recognized if the average rate of voltage change is larger than zero for more than five cycles. However, if the disturbance lasts for fewer than five cycles, it is unable to detect islanding. In this instance, the actual power shift approach can do so [30].

2.3.3. Voltage Fluctuation Injection Method

With this approach, the islanding is detected by combining the rates of frequency and voltage change. In the initial stage, the islanding is discovered by keeping an eye on the PCC's rate of change for both frequency and voltage. The DGs will trip if one of them exceeds the threshold value. A periodically switching high-impedance load is used to implement a voltage perturbation during the second step for verification. When the

main grid is connected, the grid stabilizes the PCC voltage disturbance brought on by the switching of the high-impedance load. However, islanding is identified when the main grid connection is lost by monitoring the impact of the periodic perturbation at the PCC voltage. This method's detection time is less than 0.216 s and is independent of the quality factor. However, it is less effective when used in large DG units [20].

2.3.4. Hybrid Sandia Frequency Shift and Q-F Method

Because the optimal gain kf, relies on the quality factor of the load, the Sandia Frequency approach is modified in this method by adding a Q-f droop curve to reduce NDZ. This gain value may be excessive when the quality factor exceeds five, which leads to erroneous detection and system instability. Reactive power is managed by the main grid after it is connected. While DGs operate at unity power factor and produce no reactive power during islanding operation, a frequency gap between the actual and rated system frequency is formed. This technique, with a detection period of 1.4 s, tracks this frequency variation for islanding detection [31].

2.4. Remote Methods

The communication between the main grid and the DGs inverters serves as the foundation for remote islanding detection methods. The primary benefit of this approach is that there are no NDZ and the system's power quality is not compromised. However, this method is relatively considered an expensive and complicated technique. The remote islanding detection methods are presented below.

2.4.1. Power Line Carrier Communication Method (PLCC)

This method uses a transmitter that is installed on the grid side to emit a communication signal along with the power line. Additionally, the receiver is set up on the DG side. A low-energetic signal is sent to the receiver once the main grid is connected. The PLCC signal will be interrupted during the islanding state, indicating that the microgrid is in islanding mode [23].

In this method, there is no NDZ, the power quality is not degraded, and there is no effect on the grid transient response. Moreover, the effectiveness of this method is high when it is used in multiple inverter systems. However, economically this method is expensive, especially in low-density DG systems. Therefore, it is used in the microgrid with high-density DG systems.

2.4.2. Signal Produced by Disconnect Method (SPD)

In this method, islanding can be detected based on the signal transmission between DGs inverters and the main grid which is exactly the same as the PLCC method but the signal transmission is based on a different form than the PLCC form, such as microwave ortelephone line. This method has no NDZ, and it has full control of both the main grid and DG. However, it is expensive, and the design is complicated [32].

2.4.3. Supervisory Control and Data Acquisition Method (SCADA)

In this method, the auxiliary contacts of the main grid circuit breakers are monitored to check the condition of the islanding operation. In the case of islanding, tripping signals will be sent by the SCADA system to the corresponding circuit breakers to be disconnected [33]. The effectiveness of this method for islanding detection is high, but it is expensive and requires many sensors, instruments, devices, and communication links in multiple inverters systems, and so is not considered proper for small-scale systems. Moreover, when the system has some disturbances, the detection speed of this method can be slow.

2.4.4. Transfer Trip Scheme

In this method, all circuit breakers in the islanded region are monitored and connected to DGs via a central control unit. When the main grid is disconnected, the devices of the

transfer trip determine which parts are islanding and send the required signal to trip the DGs circuit break [34]. In this method, full communication support is required, and the used common media can be radio communication, leased telephone lines, and modern communication, such as satellite communication, wireless networking, and Ethernet optic fiber. This is why the main disadvantage of this method is the design complication. However, the effectiveness of this method is extremely high with minimal NDZ and faster islanding detection.

2.4.5. Impedance Insertion Method

This method involves inserting capacitor bank or low-value impedance into the utility grid [12]. As a result of the reactive power being out of control, the balance between generation and consumption is altered. At the distribution line, the voltage and frequency are adjusted, and on the utility side, the frequency change is measured using frequency relays. This approach works well and can identify islanding with a short response time. Although this method is pricey, it does not meet some requirements because it takes too long to install the capacitor bank once the main grid connection is severed.

2.4.6. Phasor Measurement Unit

The phase angle and magnitude of an electrical phasor, such as voltage or current, are monitored in this method, which is referred to as a Synchrophasor and ROCOF, utilizing a time synchronization source that can be provided directly from a local clock using standard coding or time broadcast, such as GPS. Two units are utilized, one of them is inserted at the utility grid, and the other one at the DGs side. Moreover, time is stamped before sending it to the receiver. That way, it can be easy to determine whether DG is synchronized with the grid or not [35,36].

2.5. Signal Processing Based Methods

Signal processing methods are utilized in islanding detection to minimize the NDZ of passive methods. These methods are capable to extract the hidden feature of the measured signals at PCC (voltage, frequency, and current) which is considered an extra benefit compared to passive methods. The resulting characteristics then can be applied as input to a classification technique, such as artificial intelligence, machine learning, or some other approaches, e.g., pyramidal algorithm, to decide if the system operates in an islanding condition or not [37]. Signal processing methods are discussed and presented below.

2.5.1. Fourier Transformer Method

In this technique, the frequency domain is used to extract the signal's features at particular frequency levels. To provide quick and effective islanding detection techniques, a variety of techniques, including discrete Fourier transform, fast Fourier transform, and short-time Fourier transform, are used. However, this method's primary drawbacks are its low-frequency resolution and sparse spectrum estimation [38].

2.5.2. Wavelet Transformer Method

With this technique, a wavelet transformer is used to extract the characteristics of distorted current, voltage, or frequency. The measured signal wavelet coefficient is compared to a predetermined threshold value, and islanding is detected if the measured signal wavelet coefficient is greater than the specified value. This approach has some drawbacks, including the limitation to low-frequency bands, the difficult threshold value selection, the impact of the various sampling frequencies and the mother wavelet selection on the wavelet transformer. The wavelet packet transformer can be used to analyze high-frequency components utilizing the d-q axis of three-phase apparent power [39,40]. The wavelet transformer method is classified into continuous wavelet transformer and discreet wavelet transformer.

2.5.3. S- Transformer Method

The time-domain function is transformed into a two-dimensional frequency-domain function using this technique, which is an extension of the wavelet transformer technique. The voltage or current signal measured at PCC is used to construct the S-matrix and the associated time-frequency contours. Calculating the spectral energy content of the time-frequency contours that contain both frequency and amplitude aberrations allows for the detection of the islanding [41]. The main drawback of this method is that it takes longer to process and uses more computer resources than other ways.

2.5.4. Time-Time Transformer Method

By providing a time-time distribution in a certain window, this method transforms a one-dimensional time-domain signal into a two-dimensional time-domain signal. The low- and high-frequency components are distributed differently in this manner. This technique provides a time-local perspective of the signal through the scaled window, making it effective even for noisy signals [38].

2.5.5. Miscellaneous Signal Processing Based Methods

The power or energy signals are measured to extract the information using limited summation limits in the autocorrelation function method. The measured voltage or current signals are employed in the Kalman filter method to extract the harmonic characteristics using a time-frequency domain. For non-stationary and non-linear signals, the Hilbert–Huang transformer is a novel signal processing technique that combines the empirical mode decomposition and Hilbert transformer. The input signal is divided into various band-limited intrinsic mode functions in the variational mode decomposition approach. The morphological filters, i.e., in mathematical morphology, a time-domain analysis technique that deals with set theory, integral geometry, and signal shape, employ tools for nonlinear signal processing. In the transient monitoring function method, depending on the precision of signal estimation, the difference between the original signal and the estimated or reconstructed signal is computed.

2.6. Computational Intelligent Based Methods

The accuracy of islanding detection can be increased using signal processing techniques. However, when the DG system is more complex, signal processing methods fail to completely minimize the NDZ. In such cases, the performance can be enhanced by adding intelligence to the islanding detection relay. Computational intelligent methods can be used for islanding detection by handling multiple parameters simultaneously. The selection of threshold values is not required using those methods, but a large computational burden exists. Below is a discussion of the computational intelligent-based methods.

2.6.1. Artificial Neural Network Method (ANN)

In this procedure, the significant features from the measurement data are taken out and used to identify variations in the power system parameters. This approach performs accurately and effectively for multi-DGs. However, the biggest drawback of this approach is the lengthy data processing time [42].

2.6.2. Probabilistic Neural Network Method (PNN)

The probabilistic neural network has been suggested as a way to enhance ANN performance because to the calculation time restriction of ANN. The Bayesian classifier-based approach uses four layers: an input layer, a pattern layer, a summation layer, and an output layer with a feed-forward mechanism [43]. While employing those layers and carrying out their functions, learning is not necessary. This technique can be trusted for detecting islands.

2.6.3. Decision Tree Method (DT)

The decision tree approach is a hierarchical paradigm that divides a difficult decision-making challenge into a number of manageable choices. This technique uses a wavelet packet transformer or discrete wavelet transformer to extract the necessary features in order to detect islanding based on transmitted voltage or current signals. After the extraction of those features, the DT processes the given feature data set to detect the islanding [44]. The islanding relay's threshold setting can be optimized using this technique, allowing for the smallest detection area during islanding operation for various scenarios and configurations.

2.6.4. Fuzzy Logic Method (FL)

The problem was solved computationally using fuzzy logic, which used a rule base. A fuzzy inference system is the name given to the model created utilizing the rule bases. FL has proposed employing decision tree transformation for islanding detection, which enhances the fuzzy system by integrating fuzzy membership functions and rule basis [45]. Therefore, in terms of islanding detection, this strategy produces effective and encouraging results. On the other hand, because of the maximum and minimum combinations, fuzzy classifiers are greatly influenced by noisy input.

2.6.5. Adaptive Neuro-Fuzzy Inference System Method (ANFIS)

This method is a combination of both ANN and FL which incorporates the effectiveness of ANN to solve the problem and the flexibility of fuzzy logic to generalize the input values and problem description. An active technique was created for islanding detection that substitutes d-axis injection with an ANFIS controller for the conventional injection with a proportional-integral (PI) controller [46]. The ANFIS method's key benefit is reducing the NDZ while maintaining power quality standards.

2.6.6. Support Vector Machine Method (SVM)

By establishing a decision boundary to divide the necessary training data, the signal and structure are assessed using this method. To ascertain the typical functions of the recorded PCC voltage or current signals, SVM is paired with auto-aggressive processing. SVM has a quick detection rate and good accuracy. However, because of the data training and the method, it is fairly complicated for practical implementation [47,48].

2.6.7. Naive Bayesian Classifier Method (NB)

Based on Bayes' theorem, this classifier is regarded as a probabilistic classifier. This classifier presupposes that a specific dataset feature is independent of every other dataset variable. However, this method has better performance compared to some other classifiers in the case of large input vectors. For islanding detection, this method was proposed to classify the events of islanding, and the performance was assessed with a support vector machine classifier and validated using fourfold cross-validation [49]. Several classifiers, including random forest, ANN, DT, SVM, and NB, were used to detect the islanding based on sequential feature methods to select the best feature extracted at the PCC. The results of the NB classifier compared to others are highly accurate [50].

2.6.8. Deep Learning Method (DL)

This approach can assist in shortening the computation time required to extract the features based on the feature extraction method since the best features are automatically learned from the original input datasets without the use of a separate feature extraction method. A convolution neural network (CNN) with an image dataset as input is used in a deep learning method for islanding detection. The time series is transformed into scalogram picture data using a continuous wavelet transform [51]. It was suggested to detect islanding using a stacked auto-encoder and a deep neural network (DNN). The characteristics were then retrieved using wavelet multi-resolution spectral analysis and fed into the DNN [52].

3. Challenges of Islanding Detection Methods Selection

The integration of DGs with utility grid networks creates many challenges, especially for islanding methods. The selection of islanding detection methods extremely depends on various factors, such as the type of DG units, DG connection topologies, future expandability, DGs lifetime, and the location of DGs.

Many schemes which are used to detect islanding have been proposed but none of them is totally perfect. Hence, it is difficult to select the most appropriate method to detect the islanding and assess its suitability in grid-connected DGs systems. The criteria of islanding detection selection are uncertain and cannot be intended for use with deterministic values. Therefore, considerable expertise is required to address the whole criteria which affect islanding detection method selection.

In addition, since traditional electrical systems are replaced by smart grids, various challenges might be presented. One of those challenges is that the pathways of power flow in smart grids are multiple, which can lead to many faults in the islanding detection. Hence, to overcome such problems associated with smart grids, smart meters can be introduced to reduce the implementation cost and the complexity of islanding detection considerably.

4. Performance Analysis of Islanding Detection Methods

The accuracy of operation and time response of IDM methods are the main factors on which the performance of IDM depends. There are many criteria that can be used to determine the suitability and capability of islanding detection methods, as presented in Figure 3. The most appropriate method can operate successfully under any circumstances, based on which certain criteria are taken into account. Those criteria are fully explained below.

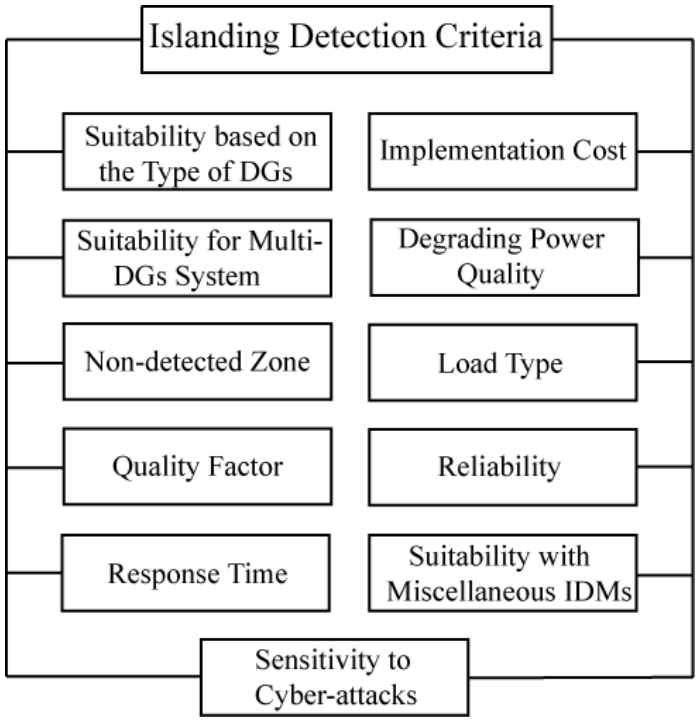

Figure 3. Islanding Detection Criteria.

4.1. Suitability Based on the Type of DGs

The type of DGs that are connected to the main grid can be either inverter-based or rotating-based. For grid-connected PV systems, inverter based, while for grid-connected wind systems, rotating-based. Some islanding detection methods are suitable for inverter-based systems and are not suitable for rotating-based systems. For example, frequency shift methods are effective in the inverter-based system and are not in rotating-based systems.

Methods that are based on terminal voltage change are proper for rotating-based systems but are not good for inverter-based systems.

4.2. Suitability for Multi-DGs System

When the system contains multi DGs, the operation of DGs can be influenced due to the connection between different types of DGs. Based on that, the sensitivity of the detection method has to be assessed effectively. The selection of the islanding detection in the multi-DGs system can be affected by various factors, such as the generation type, reverse power flow presence, and the capacity generator ratio. For instance, if there is two DGs are connected to the same PCC but their capacities are different, then the DGs with the larger capacity can dominate the behavior when islanding happens. Moreover, if two DGs are connected in parallel with the same islanding detection method, unwanted tripping may occur due to the injections of disturbances. Therefore, the synchronization of disturbances is required to avoid such cases.

4.3. Non-Detected Zone

The non-detected zone can be defined as the space of power mismatch in which the islanding detection method can fail to detect the islanding, as presented in Figure 4. Therefore, when the power of DGs matches the load power, the deviation amount of voltage and frequency can be very small, which affects the detection effectiveness greatly. Passive methods have large NDZ compared to active methods, and their effectiveness is lower in this aspect.

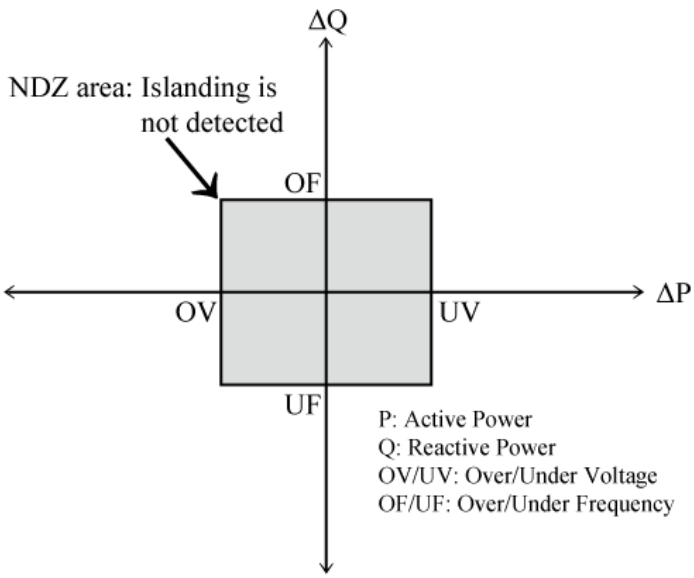

Figure 4. Non-detected Zone.

4.4. Quality Factor

The quality factor is a very important criterion that assesses the effectiveness and performance of IDMs. This factor is defined as π times the proportion of the highest stored energy to dissipated energy per cycle at a specific frequency. The relationship between the quality factor and the non-detected zone is proportional and it is necessary to keep it within the allowed ranges as standards are set.

4.5. Response Time

Due to the negative impact of islanding on the network components and utility personnel, the response time of the islanding detection method is very crucial and should be as small as possible. Most islanding detection methods have a response time ranging between half a second to two seconds, which is relatively high, especially under the

circumstance of uninterruptedly autonomous operation of an island. The response time of the passive method is more than the response time of the active method, while remote methods are faster compared to passive and active methods.

4.6. Implementation Cost

The implementation cost is considered to compromise between the system cost and quality. The cost of passive methods is the cheapest compared to other methods. While the implementation cost of remote methods is the most expensive due to the complexity and the need for more components.

4.7. Degrading Power Quality

Along with the generation requirement, power quality requirements have to be met by the DGs. Voltage fluctuation, frequency deviation, harmonic distortion, and electromagnetic interference are problems associated with power quality matter. Applying an is-landing detection scheme in the system can have a significant impact on degrading the power quality. For instance, passive methods do not degrade the power quality, while active methods can affect the power quality due to the injections and perturbation that active methods are based on.

4.8. Load Type

The construction and type of load have a significant influence on the operating voltage of the system and the performance of the islanding detection method. For instance, if the system is connected to a parallel RLC load, it will be difficult to detect the islanding condition efficiently, especially when the DG and load powers are matched. On the other hand, if the system is connected with more non-linear loads, the non-detected zone will be reduced, and the efficiency of the islanding detection method will be increased [53].

4.9. Reliability

The islanding detection method has to be reliable and accurate for tripping the system only during the islanding condition without providing any unwanted trip. Therefore, islanding detection methods have to be able to distinguish the variation of voltage and frequency which is caused by reasons other than the islanding, such as under- or overloaded conditions that the system may face. However, when the system faces some disturbances, such as load switching, the system parameters may exceed the allowed limits. In this case, islanding detection methods may present a false detection, which is known as the error detection ratio (E) and calculated as [54]:

$$E = N_{error}/(N_{error} + N_{correct}), \tag{9}$$

where N_{error} and $N_{correct}$ are the times of error detection and correct detection respectively.

4.10. Suitability with Miscellaneous IDMs

The integration of multiple DGs in the power system is becoming more common which also creates new opportunities to use different IDMs that are linked together on the same feeders or next-door feeders. Therefore, adding new DGs on the same feeder requires considering the integration among the different types of islanding detection methods that are used. Passive methods do not affect other methods but can easily be affected by other methods, such as active methods.

4.11. Sensitivity to Cyber-Attacks

In islanding detection, a cyber-attack can occur due to the injection of false data into the system. The injection of false data manipulates the threshold setting of the relay to another value, which leads to false islanding detection, causing needless generation rescheduling and load shedding [55]. Therefore, the islanding detection method has to be capable to handle cyber threats.

As mentioned above, various criteria can be considered during the selection of islanding detection methods. Based on the type of application and end-user, more criteria can be taken into account or some criteria can be neglected.

5. Standards of Islanding Detection

Various international organizations, such as IEEE and IEC, have defined the standards for the integration, control, and operation of DGs with the main utility grid. The main purpose of those standards is to provide specific requirements, including the performance, security and safety, monitoring, and maintenance of the networks of integrated power systems. Furthermore, the standards can provide a comprehensive guide to experts during the designing of islanding detection methods by considering some factors, such as load quality factor, detection time, voltage operating ranges, and frequency operation ranges. The most common standards for islanding detection which are used to evaluate the performance of islanding detection are presented in Table 1.The majority of islanding detection methods that were discussed previously can fulfill the IEEE and IEC standards requirement which require detecting the islanding condition within less than 2 s, except some signal processing-based methods, such as time-time transformer methods, which take 25 s to detect the islanding condition. However, according to other standards which require detecting the islanding condition in a time less than 0.5 s, such as the Korean standards, many islanding detection methods fail to fulfill the requirements, such as the impedance measurement method, active frequency drift method, phasor measurement method, and continuous wavelet transformer method.

Table 1. Islanding Detection Standards.

Standards	Quality Factor	Detection Time	Voltage Ranges	Frequency Ranges
IEEE Std. 1547-2003	1	$t < 2$ s	$0.88\ v \leq V \leq 1.10\ v$	$59.3\ Hz \leq f \leq 60.5\ Hz$
IEEE Std. 929-2000	2.5	$t < 2$ s	$0.88\ v \leq V \leq 1.10\ v$	$59.3\ Hz \leq f \leq 60.5\ Hz$
IEC 62116	1	$t < 2$ s	$0.85\ v \leq V \leq 1.15\ v$	$f_o - 1.5\ Hz \leq f \leq f_o + 1.5\ Hz$
Korean standard	1	$t < 0.5$ s	$0.88\ v \leq V \leq 1.10\ v$	$59.3\ Hz \leq f \leq 60.5\ Hz$
Canadian standard	2.5	$t < 2$ s	$0.88\ v \leq V \leq 1.10\ v$	$59.5\ Hz \leq f \leq 60.5\ Hz$
VDE 0126-1-1	2	$t < 0.2$ s	$0.80\ v \leq V \leq 1.15\ v$	$47.5\ Hz \leq f \leq 50.2\ Hz$
French standard	2	instantly	$0.88\ v \leq V \leq 1.06\ v$	$49.5\ Hz \leq f \leq 50.5\ Hz$
UL 1741	≤ 1.8	$t < 2$ s	Set value	Set value
AS4777.3-2005	1	$t < 2$ s	Set value	Set value
Japanese standard	0 (+rotating machinery)	Passive: $t < 0.5$ s Active: $0.5 \leq t < 1$ s	Set value	Set value

6. Comparison of IDMs

Based on the studies that were carried out, each islanding detection method has some advantages and disadvantages which should be taken into account when choosing the right IDM to be used in the network. The comparison between islanding detection methods based on the advantages and disadvantages is briefly presented in Table 2. Moreover, the selection of islanding detection methods is based on a comparative judgment that depends on the criteria which can be considered before the implementation, such as the implementation cost, non-detected zone, response time, and so on, as presented in Tables 3 and 4.

Table 2. Comparison between IDMs based on Advantages and Disadvantages.

IDMs		Advantages	Disadvantages
Local Methods	Passive	not complicated low cost easily applicable less detection time power quality is not degraded	large NDZ low reliability setting thresholds is not easy
	Active	fast speed Small NDZ low error detection ratio	perturbation injected in the network degraded power quality the detection time is poor
	Hybrid	high efficiency negligible NDZ effective in multi DGs systems	degraded power quality The detection time increases sufficiently
Remote Methods		fast speed highest reliability low detection error effective in multi DGs systems	slow detection time high cost
Signal Processing based Methods		fast speed reduce NDZ More efficient and reliable better resolution robust against noisy atmosphere window size is variable frame based processing	susceptible to distorted signals complicated computation It is only possible to retrieve low frequency band limited for certain harmonics estimation
Computational Intelligent based Methods		high accuracy reduce NDZ threshold setting is not required	large data is needed for training highly abstract

Table 3. Comparison between IDMs based on Various Criteria.

IDMs		Cost	NDZ	Power Quality	Reliability	Computational Burden	Multi DGs Application	Sensitivity to Cyber-Attacks
Local Methods	Passive	low	large	no effect	low	low	applicable	threshold values can be manipulated
	Active	low	small	slightly degraded	high	medium	not applicable	
	Hybrid	low	small	slightly degraded	high	high	applicable	
Remote Methods		very high	very small	no effect	high	high	applicable	very prone
Signal Processing		low	very small	no effect	very high	medium	applicable	sensitive if new data format is quickly adapted by the unit of signal processing
Computational Intelligent		high	very small	no effect	very high	high	high	Sensitive if the classifier is trained for false data detection

Table 4. Comparison between IDMs based on Response Time.

Islanding Detection Methods	Response Time
Passive Methods	
Over under Voltage/Over under Frequency Method	4 ms–2 s
Rate of Change of Frequency Method	24 ms
Rate of Change of Active and Reactive Power Method	24–26 ms
Phase Jump Detection Method	10–20 ms
Total Harmonic Distortion Method	45 ms
Rate of Change of Frequency over Power Method	100 ms
Active Methods	
Active Frequency Drift Method	Within 2 s
Sandia Frequency Shift Method	0.5 s
Sandia Voltage Shift Method	0.5 s
Impedance Measurement Method	0.77–0.95 s
Slip Mode Frequency Shift Method	0.4 s
Variation of Active and Reactive Power Method	0.3–0.75 s
Negative Sequence Current Injection Method	60 ms
Frequency Jump Method	75 ms
Phase-locked loop Perturbation Method	120 ms
Virtual Capacitor Method	20–51 ms
Virtual Inductor Method	13–59 ms

Table 4. *Cont.*

Islanding Detection Methods	Response Time
Hybrid Methods	
Voltage Unbalance and Frequency Set-Point Method	0.21 s
Voltage Fluctuation Injection Method	Within 0.216 s
Remote Methods	
Power Line Carrier Communication Method	200 ms
Signal Produced by Disconnect Method	100–300 ms
Supervisory Control and Data Acquisition Method	0.1–0.3 s
Transfer Trip Scheme	<10 ms
Phasor Measurement Unit	1.15–1.7 s
Signal Processing based Methods	
Fourier Transformer Method	Within 2 cycle
Wavelet Transformer Method	continuous WT (CWT) 0.6 s discrete WT (DWT) 24–26 ms
S- Transformer Method	26–28 ms
Time-Time Transformer Method	25 s
Kalman Filter Method	50–70 ms
Hilbert Huang transform	Less than 2 cycle
Computational Intelligent based Methods	
Artificial Neural Network Method (ANN)	0.2 s
Probabilistic Neural Network Method	0.12 s
Decision Tree Method	0.041 s
Fuzzy Logic Method	0.070 s
Adaptive Neuro-Fuzzy Inference System Method	0.062 s
Support Vector Machine Method	0.040 s
Naive Bayesian classifier Method	0.12 s

7. Conclusions

Various islanding detection methods are comprehensively reviewed and presented in this paper. Islanding detection methods are classified into conventional and modern methods. The conventional methods include local (passive, active, and hybrid) and remote methods, while the modern methods include signal processing and computational intelligent based-methods. The main principle of passive methods is based on observing the network parameter variation, such as voltage or frequency changes at PCC. Passive methods have a high preference to be used in the system because passive methods are cheap and easy for practical implementation. However, when passive methods are implemented, the non-detected zone can be very large. Active methods are based on perturbation injection and analyze the influence of injection on system parameters. Hybrid methods are a combination of both passive and active methods. Both active and hybrid techniques need additional devices for perturbation, which might raise the cost and complexity of installation. Remote methods depend on data collection and communication between the utility side and the DGs side. Remote methods have a free non-detected zone, but remote methods are more complex than local methods. Signal processing-based methods are based on extracting the feature. Signal processing-based methods have the highest preference in terms of cost, reliability, non-detected zone, and accuracy in comparison to other islanding detection methods which can be generally recommended for industrial applications. Computational intelligent-based methods are based on pattern recognition and data training. Computational intelligent-based methods have a reduced non-detected zone and high reliability. However, these methods have high costs and long detection times. Moreover, based on the investigated studies, it has been shown that each method has some advantages and disadvantages, and the selection of the method to be implemented in the network can be achieved by considering one criterion or even more, such as NDZ, implementation cost, quality factor, and so on. Therefore, it is difficult to determine the most appropriate method among others to provide a complete solution for all circumstances. However, for future work, it is strongly advised to employ a multi-criteria decision-making strategy, such as a group decision-making tool, to weigh the criteria, which can provide a precise comparison to choose the ideal islanding detection technique depending on the existing applications, cases, or circumstances that the system faces.

Funding: This research received no external funding.

Institutional Review Board Statement: Not applicable.

Informed Consent Statement: Not applicable.

Data Availability Statement: Not applicable.

Conflicts of Interest: The author declares no conflict of interest.

References

1. Teoh, W.Y.; Tan, C.W. An overview of islanding detection methods in photovoltaic systems. *Int. J. Electr. Comput. Eng.* **2011**, *5*, 1341–1349.
2. Isa, A.I.M.; Mohamad, H.; Yasin, Z.M. Evaluation on non-detection zone of passive islanding detection techniques for synchronous distributed generation. In Proceedings of the 2015 IEEE Symposium on Computer Applications & Industrial Electronics (ISCAIE), Langkawi, Malaysia, 12–14 April 2015; pp. 100–104. [CrossRef]
3. Reddy, C.R.; Goud, B.S.; Reddy, B.N.; Pratyusha, M.; Kumar, C.V.V.; Rekha, R. Review of Islanding Detection Parameters in Smart Grids. In Proceedings of the 8th International Conference on Smart Grid, Paris, France, 17–19 June 2020. [CrossRef]
4. Bower, W.I.; Ropp, M. *Evaluation of Islanding Detection Methods for Photovoltaic Utility-Interactive Power System*; Sandia National Lab: Albuquerque, NM, USA, 2002. [CrossRef]
5. Antony, A.; Menon, D. Islanding Detection Technique of Distribution Generation System. In Proceedings of the 2016 International Conference on Circuit, Power and Computing Technologies, Nagercoil, India, 18–19 March 2016. [CrossRef]
6. Jones, R.A.; Sims, T.R.; Imece, A.F. Investigation of potential islanding of a self-commutated static power converter in photovoltaic systems. *IEEE Trans. Energy Convers.* **1990**, *5*, 624–631. [CrossRef]
7. Kim, M.S.; Haider, R.; Cho, G.J.; Kim, C.H.; Won, C.Y.; Chai, J.S. Comprehensive review of islanding detection methods for distributed generation systems. *Energies* **2019**, *12*, 837. [CrossRef]

8. Li, C.; Cao, C.; Cao, Y.; Kuang, Y.; Zeng, L.; Fang, B. A review of islanding detection methods for microgrid. *Renew. Sustain. Energy Rev.* **2014**, *35*, 211–220. [CrossRef]
9. Ahmad, K.N.E.K.; Selvaraj, J.; Rahim, N.A. A review of the islanding detection methods in grid-connected PV inverters. *Renew. Sustain. Energy Rev.* **2013**, *21*, 756–766. [CrossRef]
10. Jang, S.I.; Kim, K.H. An islanding detection method for distributed generations using voltage unbalance and total harmonic distortion of current. *IEEE Trans. Power Deliv.* **2004**, *19*, 745–752. [CrossRef]
11. Cebollero, J.A.; Cañete, D.; Martín-Arroyo, S.; García-Gracia, M.; Leite, H. A Survey of Islanding Detection Methods for Microgrids and Assessment of Non-Detection Zones in Comparison with Grid Codes. *Energies* **2022**, *15*, 460. [CrossRef]
12. Hatata, F.A.Y.; Abd-Raboh, E.H.; Sedhom, B.E. A review of anti-islanding protection methods for renewable distributed generation systems. *J. Electr. Eng.* **2016**, *16*, 235–246.
13. Singam, B.; Hui, L.Y. Assessing SMS and PJD schemes of anti-islanding with varying quality factor. In Proceedings of the 2006 IEEE International Power and Energy Conference, Putra Jaya, Malaysia, 28–29 November 2006. [CrossRef]
14. Zhou, X.; Wu, J.; Ma, Y. A review of islanding detection method of grid-connected PV power system. *Adv. Mater. Res.* **2013**, *614–615*, 815–818. [CrossRef]
15. Mishra, M.; Chandak, S.; Rout, P.K. Taxonomy of Islanding detection techniques for distributed generation in microgrid. *Renew. Energy Focus* **2019**, *31*, 9–30. [CrossRef]
16. Kunte, R.S.; Gao, W. Comparison and review of islanding detection techniques for distributed energy resources. In Proceedings of the 40th North American Power Symposium, Calgary, AB, Canada, 29–30 September 2008. [CrossRef]
17. Mukarram, M.J.; Murkute, S.V. Sandia Frequency Shift Method for Anti-Islanding Protection of a Grid tied Photovoltaic System. In Proceedings of the 2020 IEEE International Students' Conference on Electrical, Electronics and Computer Science, Bhopal, India, 22–23 February 2020. [CrossRef]
18. Reis, M.V.; Barros, T.A.; Moreira, A.B.; Ruppert, E.; Villalva, M.G. Analysis of the Sandia Frequency Shift (SFS) islanding detection method with a single-phase photovoltaic distributed generation system. In Proceedings of the 2015 IEEE PES Innovative Smart Grid Technologies Latin America, Montevideo, Uruguay, 5–7 October 2015. [CrossRef]
19. Worku, M.Y.; Hassan, M.A.; Maraaba, L.S.; Abido, M.A. Islanding detection methods for microgrids: A comprehensive review. *Mathematics* **2021**, *9*, 3174. [CrossRef]
20. Chaitanya, B.K.; Yadav, A.; Pazoki, M.; Abdelaziz, A.Y. A comprehensive review of islanding detection methods. *Uncertainties Mod. Power Syst.* **2021**, 211–256. [CrossRef]
21. Liu, F.; Kang, Y.; Zhang, Y.; Duan, S.; Lin, X. Improved SMS islanding detection method for grid-connected converters. *IET Renew. Power Gener.* **2010**, *4*, 36–42. [CrossRef]
22. Trujillo, C.L.; Velasco, D.; Figueres, E.; Garcerá, G. Analysis of active islanding detection methods for grid-connected micro inverters for renewable energy processing. *Appl. Energy* **2010**, *87*, 3591–3605. [CrossRef]
23. Panigrahi, B.K.; Bhuyan, A.; Shukla, J.; Ray, P.K.; Pat, S. A comprehensive review on intelligent islanding detection techniques for renewable energy integrated power system. *Int. J. Energy Res.* **2021**, *45*, 14085–14116. [CrossRef]
24. Manikonda, S.K.; Gaonkar, D.N. Comprehensive review of IDMs in DG systems. *IET Smart Grid* **2019**, *2*, 11–24. [CrossRef]
25. Velasco, D.; Trujillo, C.; Garcera, G.; Figueres, E. An active anti-islanding method based on phase-PLL perturbation. *IEEE Trans. Power Electron.* **2010**, *26*, 1056–1066. [CrossRef]
26. Dong, D.; Wen, B.; Mattavelli, P.; Boroyevich, D.; Xue, Y. Modeling and design of islanding detection using phase-locked loops in three-phase grid-interface power converters. *IEEE J. Emerg. Sel. Top. Power Electron.* **2014**, *2*, 1032–1040. [CrossRef]
27. Chiang, W.J.; Jou, H.L.; Wu, J.C. Active islanding detection method for inverter-based distribution generation power system. *Int. J. Electr. Power Energy Syst.* **2012**, *42*, 158–166. [CrossRef]
28. Jou, H.L.; Chiang, W.J.; Wu, J.C. Virtual inductor-based islanding detection method for grid-connected power inverter of distributed power generation system. *IET Renew. Power Gener.* **2007**, *1*, 175–181. [CrossRef]
29. Menon, V.; Nehrir, M.H. A hybrid islanding detection technique using voltage unbalance and frequency set point. *IEEE Trans. Power Syst.* **2007**, *22*, 442–448. [CrossRef]
30. Mahat, P.; Chen, Z.; Bak-Jensen, B. A hybrid islanding detection technique using average rate of voltage change and real power shift. *IEEE Trans. Power Deliv.* **2009**, *24*, 764–771. [CrossRef]
31. Vahedi, H.; Noroozian, R.; Jalilvand, A.; Gharehpetian, G.B. Hybrid SFS and Q-f Islanding Detection Method for Inverter-Based DG. In Proceedings of the 2010 IEEE International Conference on Power and Energy, Kuala Lumpur, Malaysia, 29 November–1 December 2010. [CrossRef]
32. Sundar, D.J.; Kumaran, M.S. A comparative review of islanding detection schemes in distributed generation systems. *Int. J. Renew. Energy Res.* **2015**, *5*, 1016–1023.
33. Funabashi, T.; Member, S.; Koyanagi, K.; Yokoyama, R. A Review of Islanding Detection Methods for Distributed Resources. In Proceedings of the 2003 IEEE Power Tech Conference Proceedings, Bologna, Italy, 23–26 June 2003. [CrossRef]
34. Chandrakar, C.S.; Dewani, B.; Chandrakar, D. An assessment of distributed generation islanding detection methods. *Int. J. Adv. Eng. Technol.* **2012**, *5*, 218.
35. Barczentewicz, S.; Lerch, T.; Bień, A.; Duda, K. Laboratory evaluation of a phasor-based islanding detection method. *Energies* **2021**, *14*, 1953. [CrossRef]

36. Schweitzer, E.O.; Whitehead, D.; Zweigle, G.; Ravikumar, K.G. Synchrophasor-based power system protection and control applications. In Proceedings of the 2010 63rd Annual Conference for Protective Relay Engineers, College Station, TX, USA, 29 March–1 April 2010. [CrossRef]
37. Yılmaz, A.; Bayrak, G. A new signal processing-based islanding detection method using pyramidal algorithm with undecimated wavelet transform for distributed generators of hydrogen energy. *Int. J. Hydrog. Energy* **2022**, *47*, 19821–19836. [CrossRef]
38. Mohanty, S.R.; Kishor, N.; Ray, P.K.; Catalo, J.P. Comparative study of advanced signal processing techniques for islanding detection in a hybrid distributed generation system. *IEEE Trans. Sustain. Energy* **2014**, *6*, 122–131. [CrossRef]
39. Paiva, S.C.; de Araujo Ribeiro, R.L.; Alves, D.K.; Costa, F.B.; Rocha, T.D. A wavelet-based hybrid islanding detection system applied for distributed generators interconnected to AC microgrids. *Int. J. Electr. Power Energy Syst.* **2020**, *121*, 106032. [CrossRef]
40. Barros, J.; Diego, R.I. Application of the wavelet-packet transform to the estimation of harmonic groups in current and voltage waveforms. *IEEE Trans. Power Deliv.* **2005**, *21*, 533–535. [CrossRef]
41. Samantaray, S.R.; Samui, A.; Babu, B.C. Time-frequency transform-based islanding detection in distributed generation. *IET Renew. Power Gener.* **2011**, *5*, 431–438. [CrossRef]
42. Merlin, V.L.; Santos, R.C.; Grilo, A.P.; Vieira, J.C.; Coury, D.V.; Oleskovicz, M. A new artificial neural network based method for islanding detection of distributed generators. *Int. J. Electr. Power Energy Syst.* **2016**, *75*, 139–151. [CrossRef]
43. Khamis, A.; Shareef, H.; Mohamed, A.; Bizkevelci, E. Islanding detection in a distributed generation integrated power system using phase space technique and probabilistic neural network. *Neurocomputing* **2015**, *148*, 587–599. [CrossRef]
44. Heidari, M.; Seifossadat, G.; Razaz, M. Application of decision tree and discrete wavelet transform for an optimized intelligent-based islanding detection method in distributed systems with distributed generations. *Renew. Sustain. Energy Rev.* **2013**, *27*, 525–532. [CrossRef]
45. Dash, P.K.; Padhee, M.; Panigrahi, T.K. A hybrid time–frequency approach based fuzzy logic system for power island detection in grid connected distributed generation. *Int. J. Electr. Power Energy Syst.* **2012**, *42*, 453–464. [CrossRef]
46. Lin, F.J.; Tan, K.H.; Chiu, J.H. Active islanding detection method using wavelet fuzzy neural network. In Proceedings of the 2012 IEEE International Conference on Fuzzy Systems, Brisbane, QLD, Australia, 10–15 June 2012. [CrossRef]
47. Matic-Cuka, B.; Kezunovic, M. Islanding detection for inverter-based distributed generation using support vector machine method. *IEEE Trans. Smart Grid* **2014**, *5*, 2676–2686. [CrossRef]
48. Baghaee, H.R.; Mlakić, D.; Nikolovski, S.; Dragicčvić, T. Anti-islanding protection of PV-based microgrids consisting of PHEVs using SVMs. *IEEE Trans. Smart Grid* **2019**, *11*, 483–500. [CrossRef]
49. Faqhruldin, O.N.; El-Saadany, E.F.; Zeineldin, H.H. Naive Bayesian islanding detection technique for distributed generation in modern distribution system. In Proceedings of the 2012 IEEE Electrical Power and Energy Conference, London, ON, Canada, 10–12 October 2012. [CrossRef]
50. Faqhruldin, O.N.; El-Saadany, E.F.; Zeineldin, H.H. A universal islanding detection technique for distributed generation using pattern recognition. *IEEE Trans. Smart Grid* **2014**, *5*, 1985–1992. [CrossRef]
51. Manikonda, S.K.; Gaonkar, D.N. IDM based on image classification with CNN. *J. Eng.* **2019**, *2019*, 7256–7262. [CrossRef]
52. Kong, X.; Xu, X.; Yan, Z.; Chen, S.; Yang, H.; Han, D. Deep learning hybrid method for islanding detection in distributed generation. *Appl. Energy* **2018**, *210*, 776–785. [CrossRef]
53. Dietmannsberger, M.; Schulz, D. Different load types and their effect on islanding detection and control in low voltage grids. In Proceedings of the 2016 10th International Conference on Compatibility, Power Electronics and Power Engineering, Bydgoszcz, Poland, 29 June–1 July 2016. [CrossRef]
54. Larik, N.A.; Tahir, M.F.; Elbarbary, Z.S.; Yousaf, M.Z.; Khan, M.A. A comprehensive literature review of conventional and modern islanding detection methods. *Energy Strategy Rev.* **2022**, *44*, 101007. [CrossRef]
55. Shukla, A.; Dutta, S.; Sahu, S.K.; Sadhu, P.K. A narrative perspective of island detection methods under the lens of cyber-attack in data-driven smart grid. *J. Electr. Syst. Inf. Technol.* **2023**, *10*, 14. [CrossRef]