energies

MDPI

Review

Recent Research Progress in Piezoelectric Vibration Energy Harvesting Technology

Weipeng Zhou, Dongmei Du, Qian Cui, Chang Lu, Yuhao Wang and Qing He *

School of Energy Power and Mechanical Engineering, North China Electric Power University, Beijing 102206, China; zwp@ncepu.edu.cn (W.Z.); ddongm@ncepu.edu.cn (D.D.); cuiqians@163.com (Q.C.); luchang2017@163.com (C.L.); 120202202167@ncepu.edu.cn (Y.W.)

* Correspondence: heq@ncepu.edu.cn

Abstract: With the development of remote monitoring technology and highly integrated circuit technology, the achievement and usage of self-powered wireless low-power electronic components has become a hot research topic nowadays. Harvesting vibration energy from the environment can meet the power consumption requirements of these devices, while it is also of great significance to fully utilize the hidden energy in the environment. The mechanism and three typical working modes of piezoelectric vibration energy harvesting technology are introduced, along with the classification of different excitation types of collectors. The progress of research related to piezoelectric vibration energy harvesting technology is reviewed. Finally, challenging problems in the study of piezoelectric energy harvesting technology are summarized, and the future research and development trend of piezoelectric vibration energy harvesting technology is discussed in the light of the current research status of piezoelectric vibration energy harvesting technology.

Keywords: piezoelectric vibration; different excitation; research progress; working modes

check for updates

Citation: Zhou, W.; Du, D.; Cui, Q.; Lu, C.; Wang, Y.; He, Q. Recent Research Progress in Piezoelectric Vibration Energy Harvesting Technology. *Energies* **2022**, *15*, 947. https://doi.org/10.3390/en15030947

Academic Editor: Philippe Leclère

Received: 23 November 2021
Accepted: 24 January 2022
Published: 27 January 2022

Publisher's Note: MDPI stays neutral with regard to jurisdictional claims in published maps and institutional affiliations.

Copyright: © 2022 by the authors. Licensee MDPI, Basel, Switzerland. This article is an open access article distributed under the terms and conditions of the Creative Commons Attribution (CC BY) license (https://creativecommons.org/licenses/by/4.0/).

1. Introduction

1.1. Meaning of Energy Harvesting

Low-power wireless remote monitoring sensors have been widely used with the development of chip technology and highly integrated circuit technology in recent years. These small sensors play an important role in the Internet of Things. Achieving self-powering for these small devices has increased demand for micro-energy harvesting devices [1–3]. Micro-energy harvesting is a collection of available energy in the environment, such as wind energy, solar energy, thermal energy, tidal energy, mechanical vibration energy, and even energy in living organisms. These clean energy sources are used to power a variety of low-power, miniaturized sensor nodes. Traditional small sensors are typically powered by batteries, but the life of chemical batteries is limited and often shorter than that of electronic devices. Sensors are deployed not only in large cities but also in high mountains and remote seas. Periodically replacing the chemical fuel cells that come with the sensors is a difficult and costly maintenance task. Therefore, obtaining energy from the environment to realize self-powering for these low-power devices has become a current research hotspot.

Self-powering of small electronic devices can be achieved by obtaining micro-energy from the environment. This approach can not only replace the traditional batteries that cannot operate for a long time in harsh environments but also ensures that the devices will not be harmed by untimely battery replacement during operation. There are various forms of energy in the environment, and vibration energy is the preferred energy object due to its wide range of existence. Collecting vibration energy for energy supply is considered one of the best technical solutions for self-powering wireless sensor networks. Currently, many small sensor systems are capable of operating properly with low power consumption. For example, the power consumption of the temperature sensor system [4] and the pressure

measurement microsystem [5] is only 71 nW and 120 μW, respectively, for the whole system. In addition, these micro-systems usually operate at intervals, so power consumption requirements can be further met with the help of energy storage and management systems such as supercapacitors to power the sensor nodes.

1.2. Ways of Micro Energy Harvesting

It is a more optimal choice to collect the energy existing in the environment around the sensor to replace the chemical fuel cell. Currently, the electromechanical conversion mode can be divided into four modes according to the conversion mechanism, namely, piezoelectric type [6,7], electrostatic type [8], electromagnetic type [9,10], and triboelectric type [11,12].

The electromagnet is a closed coil in a magnetic field that cuts magnetic induction lines, resulting in a change in the magnetic flux and the generation of current in the coil. Electrostatic energy mainly relies on capacitance. The two conductors and the dielectric in the middle move relative to each other. As the movement occurs, there is a dielectric charge between the conductors, which hinders the charge movement and makes the charge accumulate on the conductors, resulting in the accumulation of charge storage [13]. The working mechanism of the triboelectric generator is the frictional charging effect and electrostatic effect. When two electrodes are in contact, the two films with different electronegativity rub together and carry different charges when they are separated, thus forming an electric potential difference. At the same time, the back electrodes of the two materials are connected by a load. The potential difference makes electrons flow between the two electrodes to balance the electrostatic potential difference between the films. Piezoelectricity is caused by the accumulation of charges on the material due to the deformation of the piezoelectric material to form a voltage difference. Piezoelectric energy harvesting is the application of the inherent polarization of the piezoelectric material to yield piezoelectricity as a simple mechanism of electromechanical conversion. It does not require an external power source, magnetic field or some other external energy and is very independent.

Piezoelectric vibration energy harvesting (PVEH), as one of the preferred methods, has the characteristics of a simple structure, easy access to materials, and excellent energy density and output voltage. At the same time, the structure is easy to miniaturize and easy to integrate with other devices [14], so it is widely used. Piezoelectric energy harvesters are capable of producing higher power output than electromagnetic and electrostatic energy harvesters [15]. when energy density is considered. In addition, the full coverage of piezoelectric energy harvesting using low-profile sensors and the results of various prototype energy harvesting devices are reviewed according to Priya et al. [16]. According to their calculations, the power density of piezoelectric energy harvesting is about three to five times higher than that of electrostatic and electromagnetic devices, as shown in Figure 1.

1.3. Main Work

There are many papers on piezoelectric energy harvesting technology. Through a lot of reading, the authors found that the existing review papers on piezoelectric energy harvesting mainly focus on several points. Firstly, the influence of piezoelectric materials on piezoelectric energy harvesting is discussed, including inorganic materials, organic materials, composite piezoelectric materials, and nanomaterials. Secondly, some scholars have discussed the influence of the piezoelectric device structure on piezoelectric energy harvesting performance and illustrate the development of piezoelectric energy harvesting by comparing different structures. These reviews adequately discuss the development of piezoelectric energy harvesting technology structures and materials, but considering only structures and materials is not comprehensive. In piezoelectric energy harvesting technology, different working modes have a great impact on energy conversion, and different working scenarios provide different external excitation.

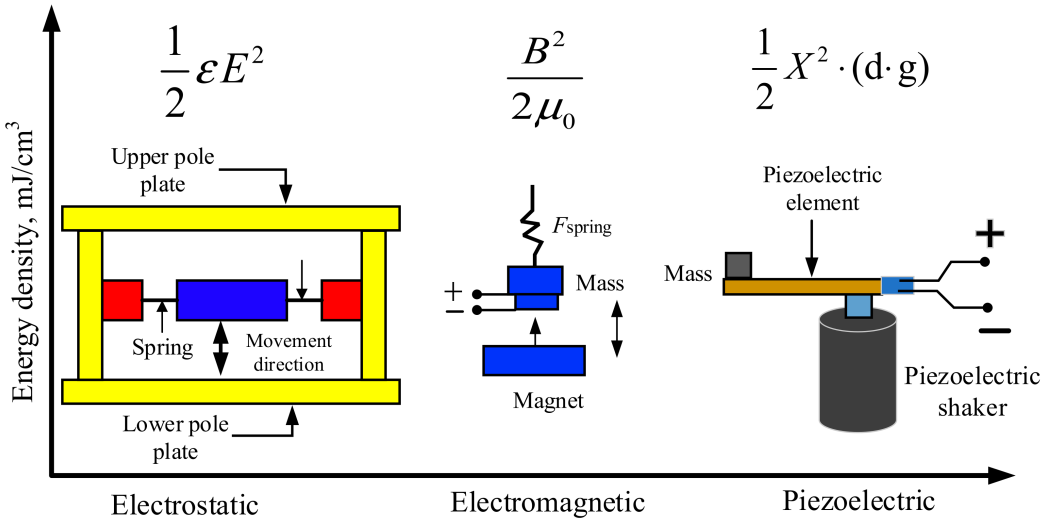

Figure 1. Comparison of the energy density for the three types of mechanical to electrical energy converters [16].

This review aims to collect and compile three typical operating modes related to piezoelectric energy harvesting and to classify piezoelectric vibration energy harvesting according to different external excitation types so as to determine the benefits and effects of different excitation types and different working modes on piezoelectric energy harvesting. The analysis of piezoelectric vibration energy harvesting systems with different operating modes and different excitation types facilitates the development of an energy harvester that combines the two. Such a device can improve the efficiency of vibration energy harvesting, thus converting vibration energy into electrical energy. This paper reviews recent research advances in PVEH, with the following main organization.

(1) Section 2 focuses on a review of the three different conversion modes of PVEH and comparative analysis of the three different modes on piezoelectric energy harvesting power using graphs. There is also a part on piezoelectric materials, piezoelectric effects, and mechanical models of piezoelectric energy harvesting.
(2) Section 3 is about the classification of piezoelectric energy harvesting structures according to the type of external excitation. In the form of a table, the effect of different excitation types of harvesters on the output power of piezoelectric energy harvesting is statistically and analytically presented.
(3) Section 4 reviews the progress of other related research on piezoelectric energy harvesting. The research on piezoelectric materials, mechanical structures, and kinetic properties is presented to optimize the piezoelectric energy harvesting structure, improve the piezoelectric harvesting efficiency, and broaden the operating band.
(4) The last section analyzes the problems of the current stage of piezoelectric energy harvesting technology in the light of the material collected in this paper and proposes future research directions and work.

2. Mechanism

2.1. Piezoelectric Materials and Piezoelectric Effects

As one of the most important parts of piezoelectric structures, piezoelectric materials largely influence the performance of the harvesting structures. There are many types of piezoelectric materials, and different piezoelectric materials have different properties and are suitable for different applications. We need to choose suitable piezoelectric materials according to different application fields and application environments, which can be inorganic materials, organic or composite materials. The selection of different piezoelectric materials has a great impact on the performance of the piezoelectric structure.

Inorganic piezoelectric materials usually include piezoelectric single crystals, piezoelectric ceramics, and so on. Piezoelectric single crystals, also referred to as piezoelectric crystals, are usually referred to as quartz crystals. Quartz can produce piezoelectric effects because the internal structure of the crystals that make it up is not symmetrical. Piezoelectric single crystals are stable in performance but have a small output power [17]. Piezoelectric ceramics, as a class of synthetic electronic ceramic materials that can form a piezoelectric effect, have strong piezoelectricity in physical properties, while the strength needs to be improved. They play an important role in people's production and life. The most widely used piezoelectric ceramics are PZT ceramics, which have the advantages of higher piezoelectric coefficient and better stability [18], but they are not able to withstand excessive stress and are more prone to brittle fracture [19,20]. Due to the good piezoelectric properties and stability of PZT ceramics, many piezoelectric energy harvesters use PZT as a piezoelectric material [21].

Organic piezoelectric materials can also be called piezoelectric polymers. The physical properties of organic piezoelectric materials are very different from those of inorganic piezoelectric materials. Organic piezoelectric materials have a more extensive frequency range than inorganic piezoelectric materials such as piezoelectric ceramics, are less prone to fracture, are more sensitive to applied excitation, and are more easily matched to impedance [22]. In terms of physical properties, organic piezoelectric materials are less weighty, more flexible, less susceptible to corrosion, and more versatile in shape. They offer very significant advantages, while being important in several areas especially in fields that require greater accuracy, such as medicine [23]. However, the polarization properties of organic piezoelectric materials have not been studied thoroughly and deeply enough, the sensor sensitivity of the sensitive elements made from them is not high enough, and the piezoelectric properties of PVDF with different crystalline structures vary considerably [24]. Therefore, the application of organic piezoelectric materials in daily life and work has been limited [25].

Piezoelectric composites are formed by combining organic polymers and piezoelectric materials in an embedded way. The piezoelectric composite is a composite of two materials, so it has more advantages than the other two single materials. Its high piezoelectricity and flexibility make it suitable for long-term use [26]. Its output power is much greater than that of the piezoelectric ceramic alone at a larger resistance value, indicating its better piezoelectric performance under certain conditions. However, in general, the piezoelectric constants of polymers are usually relatively low [27].

Piezoelectric vibration generators take advantage of the piezoelectric effect of the piezoelectric material itself. When certain dielectric crystals are subjected to external mechanical stress, the charges inside the crystal will be relatively displaced to produce polarization, resulting in a bound charge of opposite sign at both ends of the crystal. According to the different piezoelectric phenomena, the piezoelectric effect is divided into two kinds: direct piezoelectric effect and inverse piezoelectric effect. The direct piezoelectric effect means that the piezoelectric crystal material itself will be deformed, and its surface deformation will lead to the polarization inside the crystal when the piezoelectric crystal material is subjected to external mechanical stimulation. The opposite side of the piezoelectric crystal material collects positive and negative charges. When the mechanical force from the external environment disappears, the crystal surface of the piezoelectric material returns to its original uncharged state. On the contrary, the piezoelectric material will deform when an external electric field is applied to the polarization direction of the piezoelectric material. This phenomenon of mechanical deformation caused by electrical energy is called the inverse piezoelectric effect, as shown in Figure 2 [28].

There are two ways to extract energy from mechanical vibrational energy. They are inertial energy, which depends on resistance to mass acceleration, and kinematic energy, which directly couples the energy collector to the relative motion of different parts of the energy source [29]. Piezoelectric energy harvesting utilizes inertial energy harvesting.

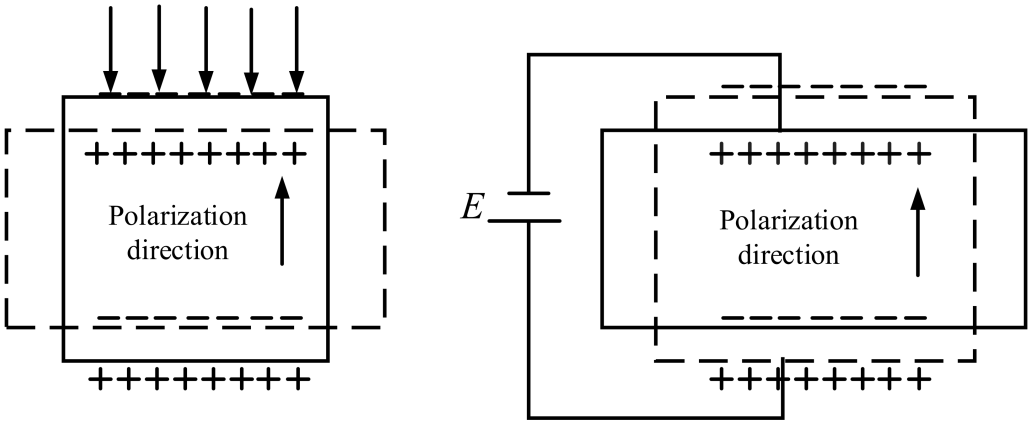

Figure 2. Schematic diagram of direct piezoelectric effect and inverse piezoelectric effect [28].

2.2. Mechanical Model of a Vibration Energy Harvester

Vibration energy harvesting can be divided into three basic types, electrostatic type, electromagnetic type, and piezoelectric type, depending on the mode of operation. The operation mode and performance characteristics of each type of generator are very different, and each type has its outstanding performance characteristics. Compared with electrostatic and electromagnetic energy harvesters, the piezoelectric type has the advantages of not requiring an external power supply, robust adaptability, and easy miniaturization [30]. The complete piezoelectric vibration energy harvesters contain two essential parts, one is the excitation receiving induction device, and the other is the external circuit load. The core part involved in the excitation receiving induction device is the piezoelectric material, and the piezoelectric vibration energy device uses the piezoelectric material with piezoelectric effect to realize the conversion of mechanical energy into electrical energy.

A mechanical model using inertial vibration energy was proposed by Williams et al. [31] as early as 1996. As shown in Figure 3, this model is a single-degree-of-freedom mechanical model consisting of a mass block, a spring, and damping. This model is still active in micro-vibration energy harvesting after more than a decade because it is intuitive, simple, and effortless to use, and the structure of the model itself is convenient for scholars to design and research and analyze the interface circuit.

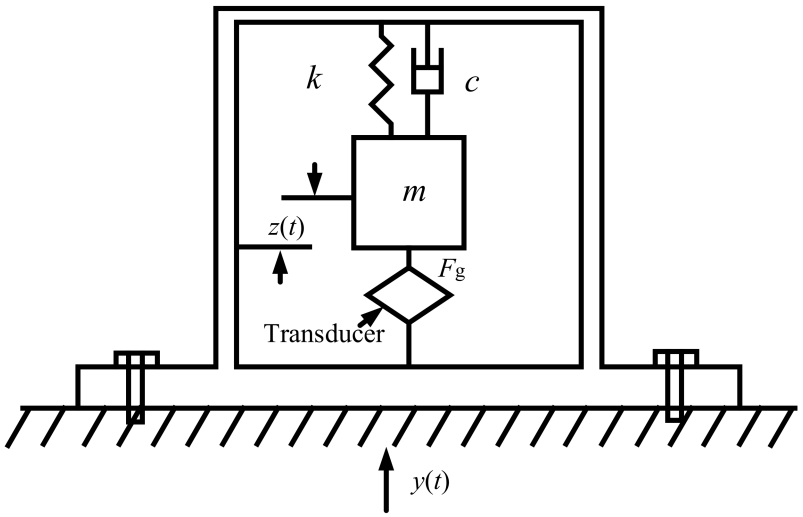

Figure 3. Mechanical model of a vibration energy harvester. Adapted from [32].

As can be seen in Figure 3, the early mechanical model of vibration energy harvesting contained a vibrator with a mass of m, a damper with a damping of c, a spring with a

stiffness factor of k, and an energy transducer that converts mechanical energy into electrical energy within a frame.

Assuming that the frame of the vibration energy harvesting device in Figure 3 is subjected to a sinusoidal vibration perpendicular to the reference horizontal direction, the displacement of the frame is

$$y(t) = Y_{\mathrm{m}} \sin(2\pi f_{\mathrm{p}} t + \phi_1) \tag{1}$$

where Y_{m} is the vibration amplitude of the frame, mm; f_{p} is the vibration frequency of excitation, Hz; and ϕ_1 is the initial phase.

In order to minimize the effect of the "electron damping" introduced by the transducer reversal on the vibration source, we assume that the mass of the excited vibration source is much larger than the m of the oscillator and let the oscillator undergo simple harmonic forced motion in the vertical direction using inertia. Thus, the relative movement expression between the vibrator is

$$z(t) = Z_{\mathrm{m}} \sin\left(2\pi f_{\mathrm{p}} t + \phi_2\right) \tag{2}$$

where Z_{m} represents the relative displacement amplitude between the vibrator and the frame, mm, and ϕ_2 is the phase difference between relative displacement $z(t)$ and absolute displacement $y(t)$.

The generator housing is vibrated with a displacement $y(t)$, the relative motion of the mass with respect to the housing is $z(t)$, and the differential equation of motion is

$$m\ddot{z}(t) + c\dot{z}(t) + kz(t) = -m\ddot{y}(t) \tag{3}$$

The force on the mass is equal to the force on the mass-spring-damper, that is:

$$F = -m\ddot{y}(t) \tag{4}$$

To maximize the output power under certain forms of external excitation, Wu [32] added a transducer structure to the original model. In addition to structural optimization, it is also possible to optimize the elasticity coefficient k, the damping coefficient c, the mass of the oscillator m, and the parameters F_{g} that match the mode of operation of the transducer. First of all, ignoring the effect of the electronic load on the transducer, if $F_g = c_{\mathrm{e}}\dot{z}(t)$, the mass m subjected to the damping force of the air damping factor c_{e} in the frame is

$$-\ddot{y}(t) = m\ddot{z}(t) + (c + c_{\mathrm{e}})\dot{z}(t) + kz(t) \tag{5}$$

When the transducer operates in the stable case, the above equation can be transformed into the s domain after Laplace transformation, and then we have

$$-ms^2Y(s) = ms^2Z(s) + (c + c_{\mathrm{e}})sZ(s) + kZ(s) \tag{6}$$

According to Equation (6), the norm of the relative displacement $z(t)$ can be found as

$$|Z(\omega)| = \frac{\left(\frac{\omega}{\omega_{\mathrm{n}}}\right)^2 Y}{\sqrt{\left[\left(\frac{\omega}{\omega_{\mathrm{n}}}\right)^2 - 1\right]^2 + \left(\frac{\omega}{\omega_{\mathrm{n}}} c_{\mathrm{T}}\right)^2}} \tag{7}$$

where ω_{n} is the natural frequency of the harvesters in the case of a short circuit of the transducer as follows

$$\omega_{\mathrm{n}} = \sqrt{\frac{k}{m}} \tag{8}$$

and c_{T} is indicates the total damping factor as follows

$$c_{\mathrm{T}} = c + c_{\mathrm{e}} \tag{9}$$

Therefore, the output power P of the transducer can be calculated from Equation (7) as follows

$$P = Fv = \frac{1}{2}\omega^2|Z(\omega)|^2 c_e = \frac{1}{2}\frac{c_e\omega^2\left(\frac{\omega}{\omega_n}\right)^4 Y^2}{\left[\left(\frac{\omega}{\omega_n}\right)^2 - 1\right]^2 + \left(\frac{\omega}{k}c_T\right)^2} \tag{10}$$

From Equation (10), it is clear that when the specific mechanics of the harvesters are ignored, the output power of the transducer is related to the velocity of the mechanical relative displacement z, which means that the charge can only be generated when the displacement occurs. When the external vibration frequency is ω_n, the output power of energy harvester is

$$P(\omega_n) = \frac{m^2\omega_n c_e Y^2}{2c_T^2} \tag{11}$$

If the damping introduced by the air is equal to the damping of the mechanical end itself, that is, $c_e = c$, combined with the relationship $a = \omega_n^2 Y$, the maximum output power of the vibration energy collector is

$$P_{max} = \frac{(ma)^2}{8c} \tag{12}$$

2.3. Typical Modes

PVEH as a technology mainly uses the mechanical energy–electrical energy conversion characteristics of piezoelectric materials to achieve energy harvesting. There are various operating modes of piezoelectric materials, except for d32, d31, d33, d15, and d24, all of which have a zero component. Among these five modes, there are the relations: d32 = d31 and d24 = d15 [30]. Therefore, the main focus of the research process is on the three working modes of d31, d33, and d15, as shown in the Figure 4.

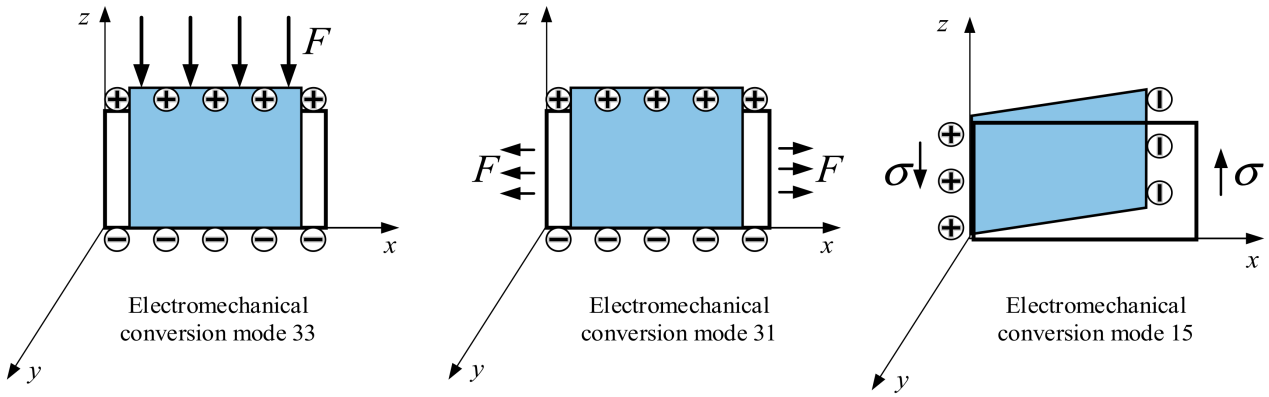

Figure 4. Electromechanical conversion type of piezoelectric materials.

2.3.1. Mode d15

In recent years, vibration energy harvesting has been extensively studied to provide a continuous power source supply for wireless sensors and low-power electronics. Torsional shear vibration is widely available in mechanical engineering, and this working mode can realize high-efficiency energy conversion. However, it has not yet been well used in the field of energy harvesting. Some scholars' research has supplemented the gap in this regard. Qian et al. [33] proposed a theoretical model of a torsional system consisting of a shaft and a shear mode piezoelectric transducer and verified the energy harvesting under different mode couplings by experiments.

It has been shown that the d15 shear mode can achieve higher electromechanical conversion efficiency compared to d31 and d33 [34,35]. The sketch of the working mode of the d15 shear mode is shown in Figure 5.

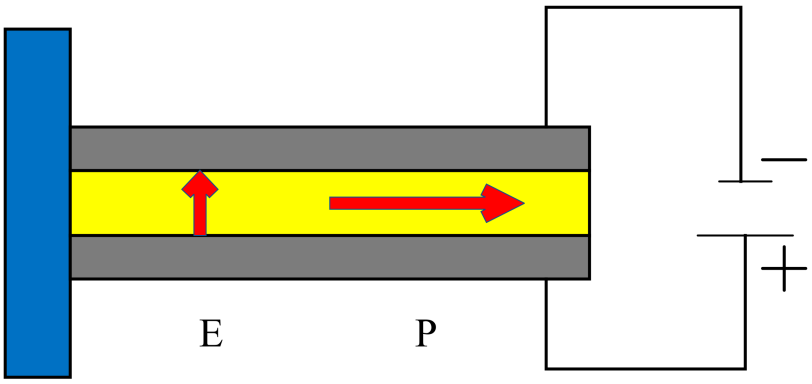

Figure 5. Shear mode energy harvester.

Ma et al. [36] proposed a composite piezoelectric effect between the vertical surfaces of a piezoelectric single crystal sheet polarized along the thickness direction and managed to eliminate the transverse piezoelectric effect along the length direction in the experiment to obtain the neglected shear piezoelectric effect d15, while the open-circuit voltage and power obtained by the superposition of the piezoelectric effect were 1.5 and 3 times the transverse piezoelectric effect, respectively. Gao et al. [37] proposed energy harvesters of a bridge shear mode structure. The structure of the harvester they designed is shown in Figure 6a. Figure 6b is the mechanical analysis model of the structure. The structure uses a high-performance relaxed ferroelectric crystal PIN-PMN-PT core piezoelectric element to improve the output performance of the device. The energy harvester achieves a maximum power density of 1.378×10^4 W/m^3, three times the power density of piezoelectric ceramic-based harvesters of the same structure. With an inertial force of 0.25 N, a voltage of 21.6 V and a current of 6×10^{-4} A can be output. Ren et al. [38] designed a piezoelectric energy harvester based on a PMN-platinum single crystal with a d15 mode cantilever. The experiments showed that a peak voltage of 91.23 V could be output and the maximum power reached 4.16 mW at a cyclic pressure of 0.05 N. Zhou et al. [39] combined the d15-mode piezoelectric effect equation with a single-degree-of-freedom model to propose an energy analysis model for a piezoelectric cantilever beam in shear mode. Experiments show that the model successfully predicted the electromechanical coupling response of the piezoelectric cantilever beam. The data from this experimental simulation were also compared with a piezoelectric cantilever beam [38] with PMN-platinum single crystals and brass spacers in shear mode.

With the deep development of piezoelectric materials, the field of piezoelectric materials is moving toward the area of nanomaterials. Nano-energy harvesting is an expansion and an important branch of nanotechnology applications in new areas [40,41]. Nano power technology is a nanogenerator embedded in a material that converts latent mechanical energy in the environment into electrical energy. Another goal is to achieve self-powered nanoelectromechanical systems, which fits with large-scale piezoelectric energy harvesting [42]. Majidi et al. [43] introduced a vertically aligned ZnO nanoribbon array structure that employs d15 shear mode piezoelectric coupling. In contrast, the nanoribbons generate electricity through elastic deformation caused by vibration or friction from an external source. Experiments show that the power density that the device structure can generate is about 100 nW/mm^3, which is relatively low but allows nanotechnology power generation. Chen et al. [44] proposed a novel actuation design based on the shear deformation of lead zirconate titanate actuator to deflect the diaphragm and apply the microfluidic system. Zeng et al. [45] introduced a cantilever beam-driven low frequency energy harvester based on the d15 shear mode in order to develop excellent shear mode performance of PMN-platinum single crystals for low-frequency applications. As shown in Figure 7, the device consists of a cantilever beam and a symmetrically assembled sandwich structure, and the maximum voltage output and power density of the device at a resonant frequency of 43.8 Hz were experimentally verified to be 60.8 V and 10.8 mW/cm^3, respectively. The theoretical

and experimental results show that shear-mode energy harvesters have great potential for application in wireless sensors. Wang et al. [46] developed a d15 shear-mode piezoelectric energy harvester capable of harnessing the energy of pressurized water streams. Experimental results show that when the harvester receives an amplitude of 20.8 KPa and a frequency of 45 Hz from the outside world, the output open-circuit voltage and instantaneous output powers are 72 mV and 0.45 nW, respectively. These studies provide an excellent perspective for energy harvesting using d15 shear-mode piezoelectric coupling.

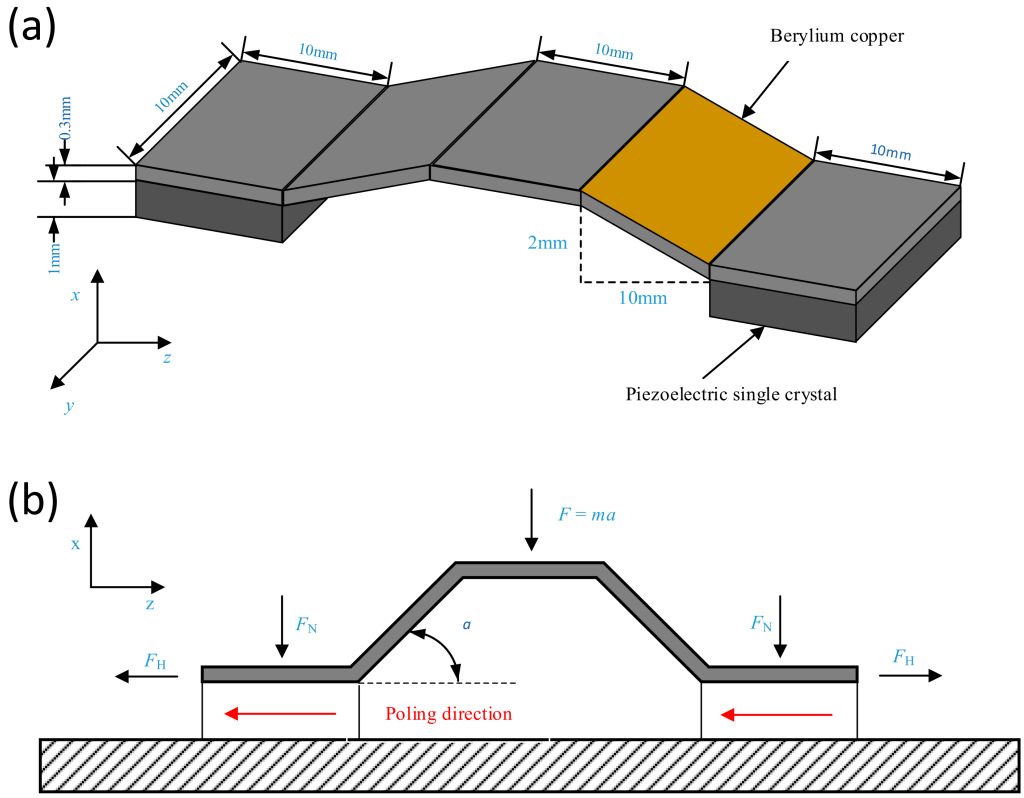

Figure 6. Working principle of the BSPEH. (**a**) Schematic of the energy harvester and (**b**) Mechanical analysis of the structure [37].

2.3.2. Mode d33

It is known that among the operating modes of piezoelectric materials, d15 achieves the highest performance output, but the difficulty in achieving the d15 mode is often the greatest. The d33 mode is approximately twice as high as the d31 mode, so the harvester in the d33 operating mode is expected to achieve higher performance [47].

Choi et al. [48] developed an energy harvesting MEMS device based on thin-film lead zirconate titanate (PZT). It uses a dual piezoelectric wafer structure, and the PZT film is made into a cross shape. The experiment investigated PEH with IDE by analyzing the effect of verifying the mass, beam shape, and damping on the output power, but neglected that the configuration parameters of the electrodes may affect the device performance. Park et al. [49] introduced a microelectromechanical system energy harvester using the d33 piezoelectric mode, as shown in Figure 8. This experiment simulated and analyzed the voltage and impedance of the d33 mode piezoelectric energy harvesting while obtaining a peak voltage of 4.4 V and a power output of 1.1 μW at 0.39 g acceleration and vibration 528 Hz frequency. However, they did not verify the effect of the change in electrode size on the output power.

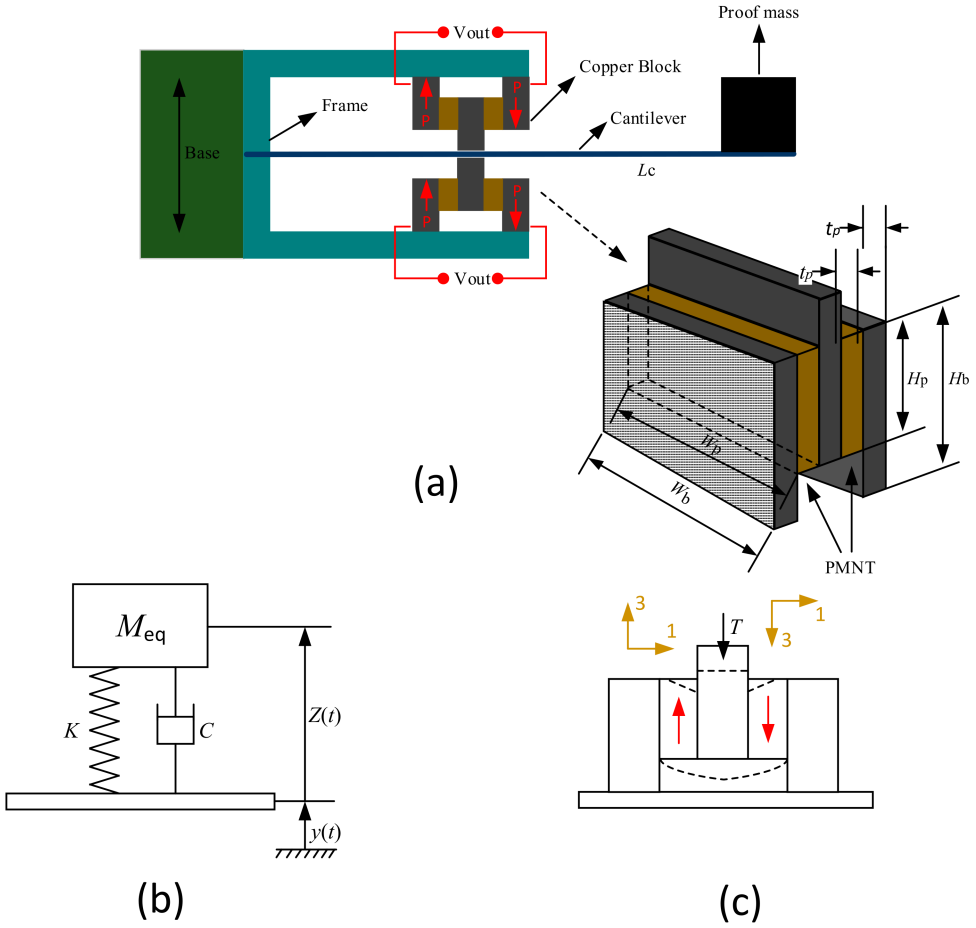

Figure 7. (**a**) Schematic and (**b**) SDOF model of the proposed S-CANDLE device. The arrows in the PMNT wafers indicate the poling direction. (**c**) Force analysis of the middle copper block and one PMN-PT wafer. Adapted from [45].

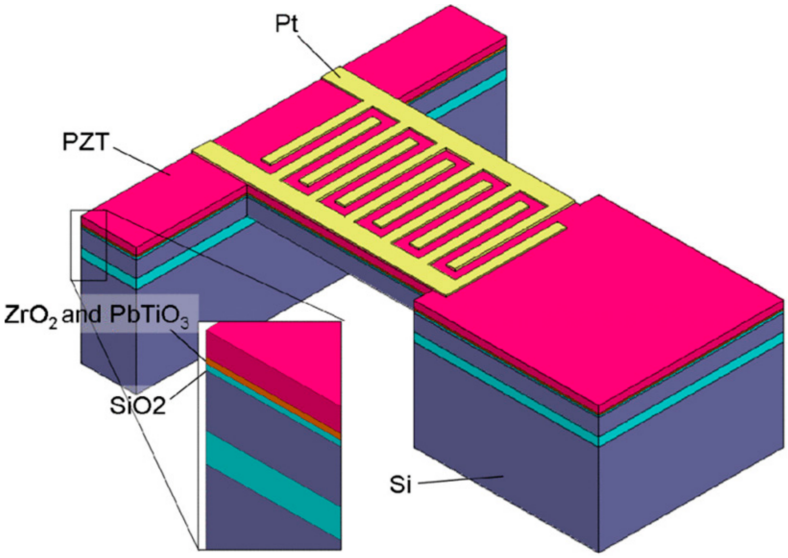

Figure 8. Schematic drawing of the proposed piezoelectric MEMS energy harvester operating in the d33 mode for the purpose of scavenging low vibrations [49].

Although the performance of energy harvesting devices in the d33 mode can be optimized by changing the electrode size, the effect of electrode size variation on the output

power has not been studied. To solve this problem, Kim et al. [50] investigated a micro-electromechanical system energy harvesting device based on a single piezoelectric wafer cantilever structure consisting of forked finger-shaped electrodes in the d33 mode. In this study, the output power was modeled using angle-preserving mapping and Roundy's sequential circuit model, and the new analytical equation of power output well explained the effect of electrode size on the output power of d33 mode. Shen et al. [51] introduced a piezoelectric thin-film energy harvester based on the d33 mode of helical electrodes, which uses double-sided helical electrodes to achieve in-plane piezoelectric film polarization. Although the d33 mode had better device performance, the efficiency of energy harvesting at low frequencies was still not high enough. To improve the energy harvesting efficiency at low frequencies, Sun et al. [52] derived the output equations for voltage and power for series and parallel piezoelectric stacks in the d33 mode based on the piezoelectric equations and equivalent circuits to improve the energy harvesting efficiency at low frequencies. It is clear that if you want to get a higher voltage, you should choose a piezoelectric stack series in the experiment. Similarly, you can use parallel connection if you are going to get higher power. Kashyap et al. [53] proposed an analytical model for the distribution parameters of the d33 mode collector. Although they investigated the electromechanical coupling, the neighboring mode effects of the single-mode approximation were not considered in their study, and the experimental results overestimated the load resistance value. Ahmad et al. [54] applied the piezoelectric d33 mode to a piezoelectric micromechanical ultrasound transducer, which improved the operating sensitivity, but the expansion of bandwidth was not desirable.

Although the d33 mode is better than the d15 and d31 modes in terms of performance, there are still some difficulties in obtaining higher output performance only in the structure because it is difficult to improve the coupling and electromechanical coefficients in the structure. To address the corresponding problem, Tang et al. [55] prepared PMN-platinum piezoelectric thick films using a hybrid process of wafer bonding and mechanical grinding for thinning and developed a d33-mode harvester based on interdigital electrodes to address the related problem. Experiments show that the harvester obtained a peak voltage of 5.36 V, a power of 7.182 μW, and a power density of 0.018 mW/cm^3 at a vibration level of 1.5 g acceleration and an operating condition of 406 Hz. Sil et al. [56] set several different parameters to analyze the performance of the model to optimize the vibration energy harvesting performance in d33 mode, and an output voltage of 200 mW was obtained when 1 N force was applied to the model. Wu et al. [57] introduced a barbell-type piezoelectric energy harvester in d33 mode using $BiScO_3$-$PbTiO_3$ high-temperature piezoelectric ceramics for the need of vibration energy harvesting in high-temperature environments. The experiment set the energy harvester to operate at 1 g acceleration at 25 °C to obtain a power output of 4.76 μW and to double the power output at high temperatures of 150–250 °C. Compared with the d31 model, the experimental model is well adapted to high temperature conditions and exhibits good piezoelectric effects, which provides a good demonstration of a piezoelectric energy harvester working for wireless sensors in high-temperature environments. Liu et al. [58] investigated a two d33-mode rectangular multilayer single-crystal stack applying $Pb(In_{1/2}Nb_{1/2})O_3$-$Pb(Mg_{1/3}Nb_{2/3})O_3$-$PbTiO_3$ material to improve the high power output of barbell-type energy harvesters. The study compared the different output power in series and parallel with a multilayer large piezoelectric element. The experiment shows that the maximum power density that can be generated by the wafer stack in series is 39.7 mW/cm^3 under the working condition of 5 g acceleration from the outside, with a maximum output current of 800 μA in parallel circuits. This also verifies that the model has strong vibration durability.

Although the ability to use piezoelectric stacks in d33 mode for mechanical-to-electrical energy conversion has improved, most studies are mainly based on simplified single-degree-of-freedom (SDOF) models or transfer matrix models. Qian et al. [59] constructed a distributed parameter electromechanical model of a multilayer piezoelectric stack harvester by applying the axial vibration theory of elastic rods. This electromechanical device

introduces a first-order numerical model to verify the performance of the device in terms of voltage, current, and power output under different types of external excitation.

2.3.3. Mode d31

Although the piezoelectric d33 mode conversion can achieve higher voltage output, particularly for low-pressure sources and occasions where the size is limited, and the electrode configuration is simplified, the advantages of d33 over d31 are not so obvious. The d31 mode has greater advantages, especially in microelectromechanical system applications [60]. Therefore, the most commonly used piezoelectric harvester is the d31 mode, and the normal strain is perpendicular to the electric field direction. This is because under such conditions, the piezoelectric material can operate in pure bending mode at low cost. The sketch of the operating mechanism of the d31 mode is shown in Figure 9.

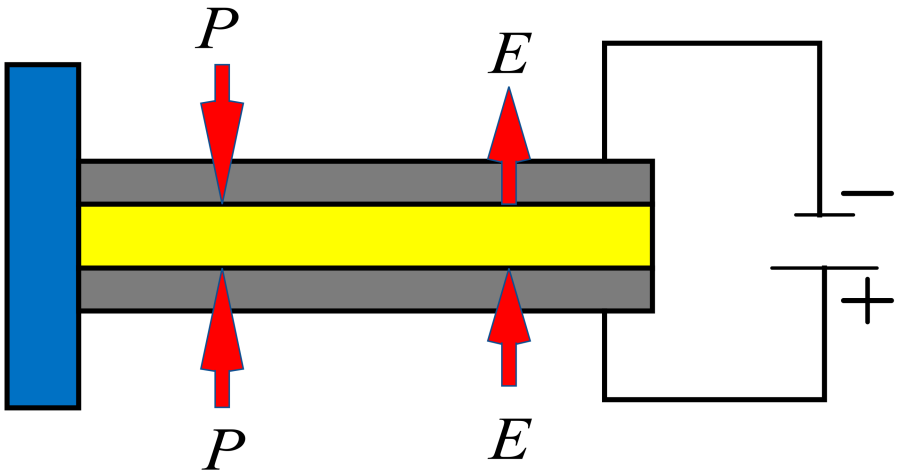

Figure 9. Transverse mode energy harvester.

In 2006, Fang et al. [61] developed a harvester with a different structure from the conventional cantilever beam, double support beam, and diaphragm. This harvester was designed based on a composite micro-cantilever beam with an optional verified nickel mass in d31 mode. The structure has a metal block at the free end, which reduces the natural frequency of the structure. It is more sensitive to a low-frequency environment, and the voltage output of 0.89 V was obtained at a resonant frequency of 608 Hz. With further development of the research, some scholars found that the root of the cantilever beam is often easy to be ignored in the design of the strength, resulting in the structure of the whole device that does not adapt to the more complex working conditions. Wang et al. [62] fabricated and tested a micro-piezoelectric energy harvester of the two-vibrator double-cantilever-sorghum type, which also used a curve-widening method for the root for structural optimization. The structure was able to obtain a power output of 2.347 μW at 40.2 Hz and 0.25 g acceleration but also exhibited good stiffness, resulting in the insensitivity of the device to the subharmonic frequency response. Structural breakthroughs can provide an effective way to achieve increased power output. Zhang et al. [63] designed a novel flexible amplification mechanism to achieve larger energy output, which was designed using a pseudo-rigid body and topology optimization approach to integrate a piezoelectric stack into an energy harvesting pedal in the d31 mode.

Since the d31 mode has some shortcomings, it is challenging to achieve high power output purely from the structure. Therefore, optimizing the piezoelectric power output by changing the piezoelectric material becomes another area for research. Yang et al. [64] prepared a high-performance piezoelectric ceramic film using the thinning technique and PZT-bonding technique to establish a parametric model of the energy harvester. The experimental results show that the maximum output voltages that the harvester could obtain under 0.5 g and 1.0 g acceleration were 3.4 V and 6.08 V, and the corresponding output

powers were 20.2 μW and 57.6 μW. The experiment demonstrates that the energy conversion efficiency of the harvester varies at different accelerations, and the energy conversion efficiency at 0.5 g acceleration is higher than that at 1 g acceleration, which is 38.15%. Guan et al. [65] proposed a composite cantilever beam structure based on the d31 mode in order to solve the problem of collecting the frequency range, and this study explored the d31 and d33 mode coupling. Banerjrr et al. [66] developed a fully coupled electromechanical Timoshenko model, and the theory can be well applied to transverse mode energy harvesters. Singh et al. [67] introduced a piezoelectric vibration energy harvester based on the d31 mode, sandwiching a zinc oxide piezoelectric layer between two metal electrodes. When studying the resonant frequency, it was found that the natural frequency of the device was 235.38 Hz and the device was able to obtain an open circuit voltage of 306 mV at 0.1 g harmonic acceleration.

Table 1 lists the characteristics of several typical piezoelectric operating mechanisms. A simple comparison shows that the working mechanism of the d15 shear mode has a relatively large advantage in power output and power density in general among the three typical operating mechanisms. There are relatively few research papers on the d15 shear mode because it is difficult to obtain the force of the shear mode in a vibrating source, notwithstanding that the d15 shear mode is excellent in terms of power output and power density. Although these reports show that the output power of the d33 mode at low acceleration is in the microwatt range, considering that the size and volume of the entire piezoelectric material in laboratory tests are relatively small, the output power is also considerable. The d31 mode has great challenges in terms of high-power output but has excellent performance in the low-frequency field, which lays the foundation for the d31 mode to exhibit excellent performance in micro-electromechanical systems.

Table 1. Comparison of the characteristics of several typical piezoelectric operating mechanisms.

Refs.	Modes	Materials	Voltage (V)	Power (mW)	Acceleration (g)	Density (mW/cm^3)
Gao et al. [37]	d15	PIN-PMN-PT	21.6	12.96	3.0	13.78
Zeng et al. [45]	d15	PMN-PT	60.8	0.78	1.0	10.8
Ren et al. [38]	d15	PMN-PT	91.23	4.16	1.0	4.48
Park et al. [49]	d33	PZT	4.4	0.001	0.39	7.3
Tang et al. [55]	d33	PMN-PT	5.36	0.0078	1.5	0.018
Wu et al. [57]	d33	BS-PT	8.45	0.0047	1.0	~
Wang et al. [68]	d33	PZT-5	37.6	10.036	1.0	0.0743
Wang et al. [62]	d31	PZT	4.9	0.003	0.25	~
Yang et al. [64]	d31	PZT	6.08	0.058	1.0	5.14
Palosaari et al. [69]	d31	Soft ceramic	7.0	0.66	1.0	1.37
Wu et al. [70]	d31	BS-PT ceramic	12.0	0.013	1.0	0.04

3. Energy Harvesters of Different Excitation Types

Since the first appearance of energy harvesters in 1990, many scholars have proposed many principles, mechanisms, and implementation methods [42,71], especially in piezoelectric vibration energy harvesting structures (PVEHS), with numerous innovations. Therefore, many high-efficiency, wide-band, innovative piezoelectric vibration energy harvesting structures have emerged, which to a large extent have made piezoelectric energy harvesters widely studied and popularized.

Piezoelectric vibration energy harvesters are typical composite structures, which are composed of a piezoelectric structure and a vibrational conversion structure, including AC–DC conversion circuits, energy storage part, and so on [72,73]. As shown in Figure 10, the conventional piezoelectric vibration energy harvesters are covered with one or two layers of piezoelectric material on both sides of the cantilever beams, i.e., single and double piezoelectric wafer piezoelectric energy harvesting structures. They are usually attached to the main structure, equipped with a mass block at the top of the cantilever, and tuned to the resonant frequency within the range available to the environment. The piezoelectric element is excited in the desired vibration mode under a vibration conversion mechanism when subjected to forced vibration, and then a voltage output is generated by the direct piezoelectric effect of the piezoelectric material [74]. Most piezoelectric transducers operate

in a resonant state in order to obtain the maximum power output. It is the optimal state when the fundamental frequency of the environment is compatible with the frequency of the piezoelectric transducer [75].

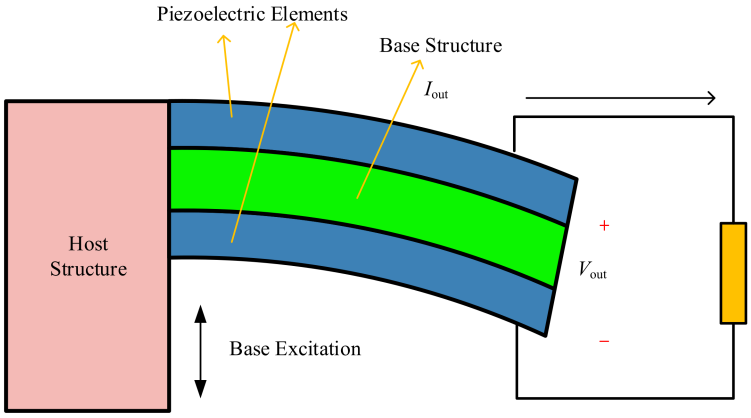

Figure 10. Schematic diagram of a typical PVEH. The bimorph structure of the PVEH is only for demonstration [72].

3.1. Impact-Type Harvesters

Piezoelectric vibration energy harvesting structures can be significantly divided into two types; impact type and resonant type. The impact-type harvester operates without concern about resonant frequency and is used in impact excitation environments. Resonant energy harvesting structures must operate at resonant frequencies and achieve maximum power output while obtaining maximum displacement [76].

Chen et al. [76] designed an impact-driven piezoelectric energy harvester (PEH) in a magnetic field, which is based on the energy principle to establish a MDOF (multi-degree of freedom) mathematical model to calculate the displacement, velocity, and voltage output of PEH. The results of the study showed that the energy that can be generated by a single impact is 0.405 mJ. Chen et al. [77] reported a hybrid vibration energy harvester with a generator that induces vibration operation in shock mode, which triggers vibration operation in shock mode, and with an electromagnetic induction component attached to the top of the cantilever beam. The electrical energy collected by the two impacted piezoelectric plates was 429.3 μW at an amplitude of 4.5 mm and a frequency of 13 Hz, which showed that the piezoelectric elements operating in the impact-induced vibration mode could have greater power output than their counterparts in the impact mode. Mahmoud [78] studied the collection of vibrational energy from a freely falling droplet at the top of a lead zirconate titanate piezoelectric cantilever beam, where the kinetic energy of the droplet was converted into mechanical stress during droplet impact, forcing the piezoelectric structure to vibrate and generate an electrical charge. The experimental results show that 0.23 g of water droplets falling at a speed of 3.43 m/s can generate 23 μW energy. Ilyas et al. [79] studied a device that harvests the energy of raindrop impact using piezoelectric materials. It was shown that the energy output of the device was less than 90 nW and the average power of a single device was not high, but this study also provides a good perspective for the study of impact piezoelectric energy. In addition, Liu et al. [80] designed a piezoelectric energy harvester consisting of silicon beams and mass blocks made of silicon to achieve a broadband, low-resonance energy harvesting. It can output a stable power generation from 19.4 nW to 51.3 nW in the operating frequency range of 30 Hz to 47 Hz under the impact of 1 g acceleration. Gu et al. [81] introduced a method of impinging a low-frequency resonator on a high-frequency resonator so that energy is collected mainly at the coupled vibration frequency of the system. The experimental results show that the coupled vibration method improved the efficiency of electrical energy transfer, and the average power output was 0.43 mW at 8.2 Hz and 0.4 g acceleration, corresponding to 25.5 $\mu W/cm^3$.

Liu et al. [82] reported a broadband harvester introduced by a mechanical brake in order to enable a wide range of operating bands, as shown in Figure 11. They investigated in depth the broadband frequency response of a piezoelectric vibration system with unilateral and bilateral cutoffs. The experiments show that the frequency band range from 30 Hz to 48 Hz corresponds to a power range of 34 to 100 nW under the working conditions of base acceleration of 0.6 g and top and bottom brake distances of 0.75 mm and 1.1 mm, which has good value in the research field of collecting random vibration frequencies.

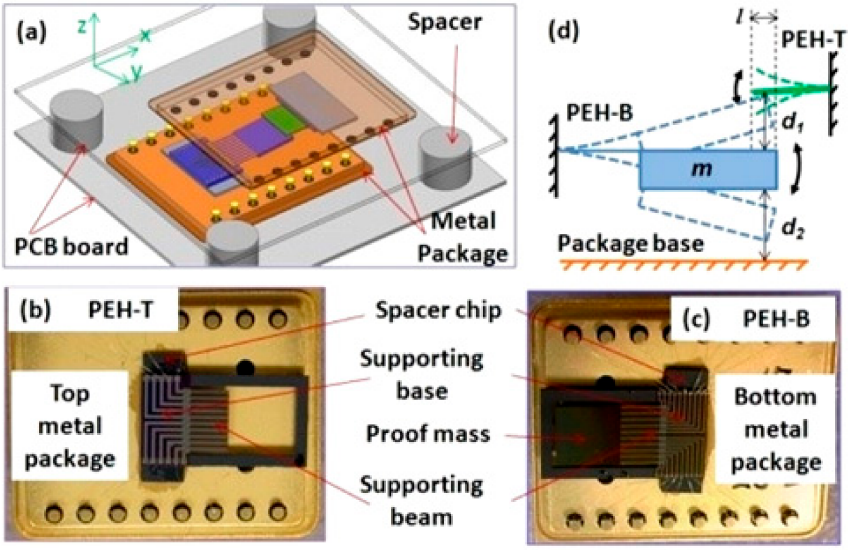

Figure 11. (**a**) Device configuration of an impact-based PEH system. (**b**) Operation mechanism of the impact-based PEH system. (**c**) Top view of the bottom PEH device. (**d**) Top view of the top PEH device [82].

Zhang et al. [83] proposed a tunable frequency piezoelectric energy harvester. As shown in Figure 12, a novel impact and rope-driven hybrid mechanism is used and the high-frequency generating beam is triggered by a rope or is directly impacted by a low-frequency driving beam. It is shown that by adjusting the rope margin from 0.5 mm to 2 mm, the center operating frequency of this piezoelectric vibration energy harvester can be easily changed from 74.75 Hz to 106 Hz by adjusting the rope margin from 0.5 mm to 2 mm, which can achieve a bandwidth 4.2 times higher than that of a conventional piezoelectric vibration energy harvester.

Yin et al. [84] proposed a dual-impact drive FUC-PEH system consisting of two piezoelectric energy harvester units, as shown in Figure 13. Based on the single-degree-of-freedom system and the piezoelectric coupling factor, the corresponding model was established. Theoretical calculations and experimental tests show that the energy harvester can achieve high power output in the frequency range of operating band from 3.5 Hz to 15 Hz under different accelerations. The average output power is 1.17 mW at an acceleration of 6 m/s^2 and a frequency of 9.8 Hz, while the average output power can reach 1.86 mW at an excitation frequency of 15 Hz.

Since the human body is accompanied by vibrational energy in motion, the realization of self-powered wearable devices has also become a hot topic nowadays. Therefore, impact energy harvesters have a wide range of applications in this field as well. Halim et al. [85] proposed and demonstrated an impact-based frequency up-converted wide bandwidth piezoelectric energy harvester. The device is designed to impact two high-frequency piezoelectric generating beams with a low-frequency driving beam having a horizontally extended tip mass, and after the impact, the beam stiffness during the coupled vibration is used to broaden the bandwidth of the collected frequencies. Experiments show that a peak power of 377 μW can be generated at 0.6 g acceleration and 14.5 Hz operation, which

corresponds to a power density of 58.8 μW/cm^3. Figure 14 shows the schematic structure and the theoretical linear model of the device.

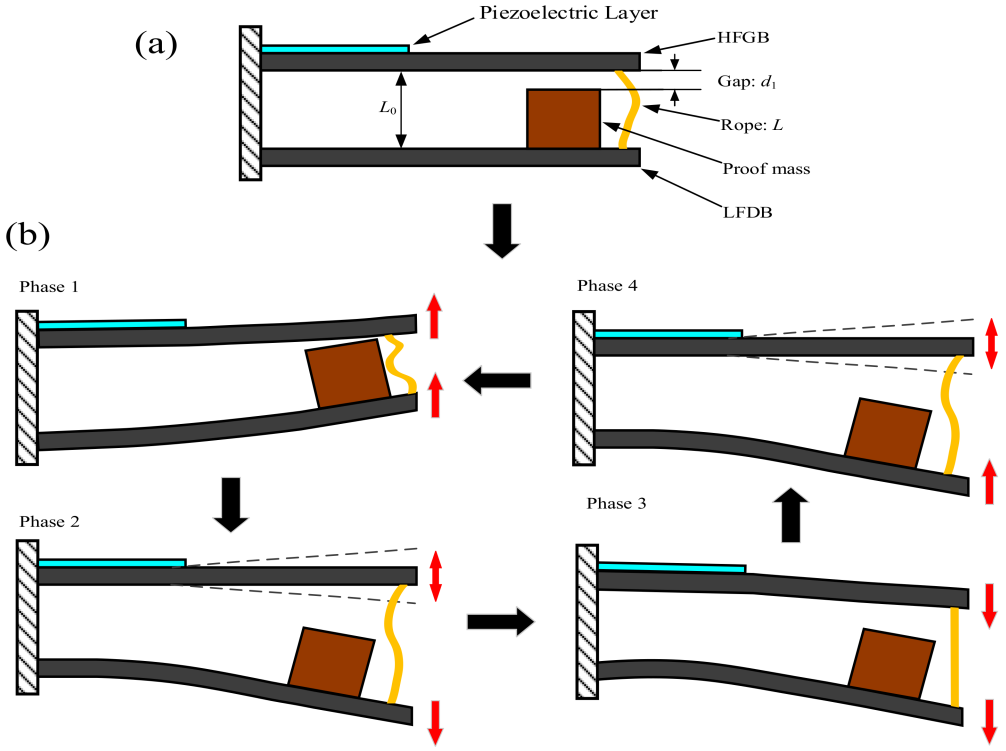

Figure 12. Architecture (**a**) and operation mechanism (**b**) of the proposed PVEH system [83].

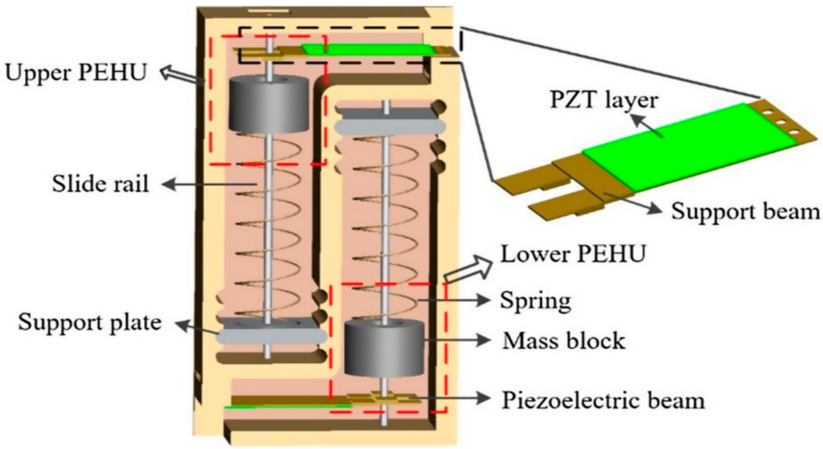

Figure 13. Geometry of the proposed energy harvester.

Vijayan et al. [86] investigated nonlinear energy harvesting in coupled collisional sorghums. They found that using shocks for energy harvesting is an effective means to increase the operating bandwidth of energy harvesters. Compared to a linear system that excites only one mode, a nonlinear shock can excite multiple modes for the same excitation frequency. In addition, piezoelectric ceramics, as materials with excellent piezoelectric properties, have been applied to shock-type vibration energy harvesting. Most scholars at the beginning focused their research around the first resonance of ceramics but neglected the energy that can be brought by the second resonance. Halim et al. [87] proposed a broadband low-frequency vibration energy harvester based on piezoelectric ceramics, which used mechanical shocks to transmit secondary forces to a ceramic cantilever secondary sorghum,

leading to an increase in strain while exciting a nonlinear frequency conversion mechanism, which directly increases the power and operating bandwidth of the output. The study shows that it can output 449 μW peak power at a mass ratio of 5.8 and a braking distance of 0.5 mm and 17 Hz, and the device can collect frequencies in the range of 9 Hz to 24 Hz at 1 g acceleration. Isarakorn et al. [88] introduced a two-stage energy harvesting device for generating electricity from human footsteps using the principle of frequency up-conversion in the form of a stamped cantilever beam. It was able to output 0.82 mW of average power in an operating environment with a frequency resonance of 14.08 Hz and a 0.93 g acceleration.

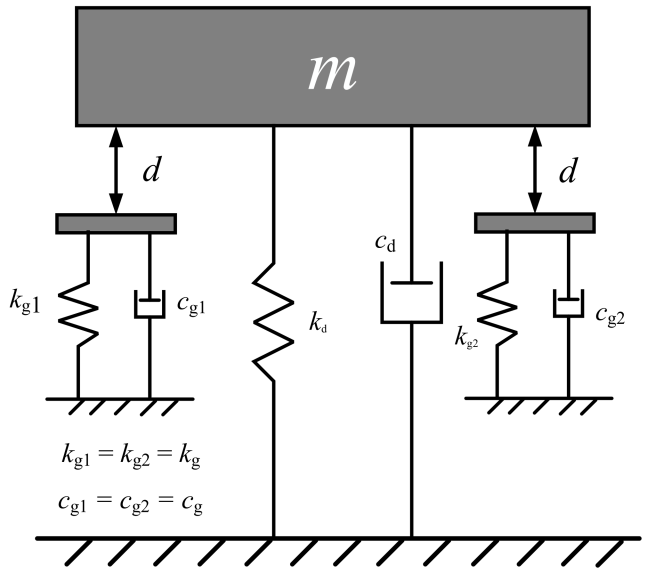

Figure 14. SDOF piecewise linear model [85].

3.2. Resonant-Type Harvesters

Resonant energy harvesting structures are known to have special requirements for excitation from the environment. Unlike impact operation, resonant energy harvesters need to consider the ambient excitation frequency versus the natural frequency of the harvesting structure itself. The natural frequency of the cantilever structure is essential because the resonant frequency of the piezoelectric cantilever beam must be tuned to match the harmonic frequency of the vibration source to obtain the maximum power value. Naim et al. [89] investigated the mechanical and electrical properties of a mechanically vibrating piezoelectric cantilever beam. The study showed that the voltage and power collected at 1 g acceleration and 345.75 Hz were 595.5 mV and 14.85 μW, respectively. Different researchers have tried to make a breakthrough in cantilever beam types of energy harvesting [90,91]. Erturk et al. [92] proposed a model of a double piezoelectric wafer cantilever beam with a tip mass attachment and derived an analytical solution for the bimorph cantilever structure. Magoteaux et al. [93] used two different types of energy harvesting regarding UAV landing gear. They used a cantilever beam and a curved beam with a piezoelectric material, and their experiments showed that the curved beam produced more energy than the simple cantilever beam. Erturk et al. [94] proposed a distributed parameter model for analyzing the electromechanical coupling behavior of L-shaped piezoelectric energy harvesters. It was shown that the L-shaped structure can be tuned to have two closer natural frequencies than a conventional cantilever beam, and that the L-shaped sorghum had a higher output power than the cantilever beam.

The performance of vibrating energy harvesters is well related to the structure, so many scholars have tried to innovate the structure to optimize each device's performance. Liu et al. [95] fabricated a power generator array based on thick-film piezoelectric cantilever beams using microelectromechanical technology. The key of the structure is to increase the flexibility of the collection frequency and expand the excitation band by arraying

piezoelectric cantilever beams. The effective power of this prototype is 3.98 mW, while a small range of frequency modulation can be achieved. Most resonant energy harvesting devices are passive. Luo et al. [96] explored an active energy harvesting technology that used a piezoelectric–mechanical-coupled spring-mass-damped mechanical resonator and developed a mathematical model of the piezoelectric dynamical system. This study theoretically demonstrated that the power harvested by the device could be the maximum of all excitation frequencies. In other words, at resonant frequencies, active technology has a unique advantage over other technologies on a technical level. Active dynamic energy harvesting technology is well promoted because it can be used to broaden the bandwidth of piezoelectric resonant energy harvesting systems. Stein et al. [97] introduced a new resonant inverter topology that enables dynamic energy harvesting. The experiment demonstrated that the output power of this structure was 7.7 times the conventional under non-resonant operating conditions. It performed even better near the resonant frequency, with two times the power of the traditional output.

We know that energy harvesters using resonant-type mechanisms generally face two major challenges: first, the output power that resonant structures can produce in low-frequency vibration environments is low and cannot meet the demand; second, vibration structures are effective in collecting frequencies in a small range near the resonant frequency, but they cannot achieve a wide range of resonant frequency collection. Dhakar et al. [98] designed a novel low-power piezoelectric energy harvester, as shown in Figure 15. It consists of a composite cantilever beam and a proof mass at the free end. To reduce the natural frequency of the structure, the composite cantilever beam design was used to reduce the resonant frequency to 36 Hz. The composite cantilever beam consists of a piezoelectric bimorph and a polymer beam (soft spring) mechanically connected along the longitudinal direction. Li et al. [99] designed a dual resonant structure for a piezoelectric PVDF thin-film energy harvester, and the adopted dual cantilever beam structure achieved resonance collection at 15 Hz and 22 Hz. A broadening of the frequency band was achieved when the cantilever beam collided due to the large amplitude to produce violent mechanical coupling, and vibration frequencies from 14 Hz to 28 Hz were collected at 1 g acceleration. Moreover, this dual resonance structure of the device obtained higher power than the sum of two independent devices in the low-frequency environment.

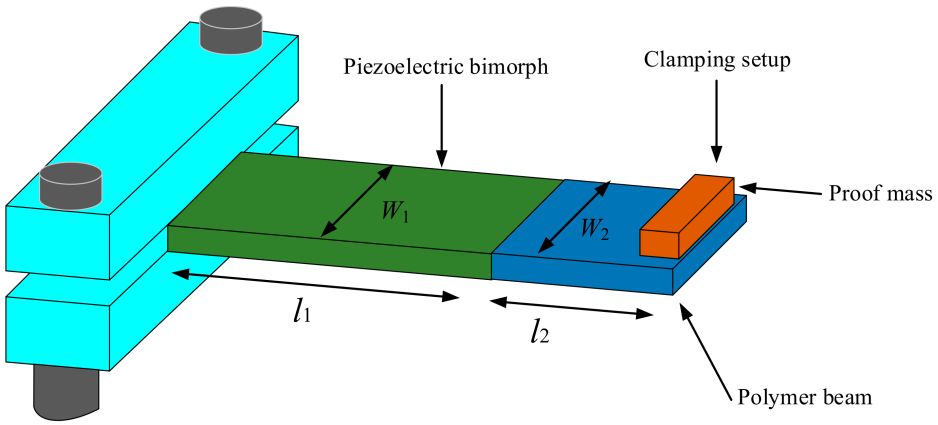

Figure 15. Design of PEH-S with a polymer spring attached to piezoelectric bimorph [98].

The ability of a piezoelectric device to acquire vibration energy depends on the geometry of the cantilever beam to some extent. Hosseini et al. [100] used the Rayleigh–Ritz method to design a computational trapezoidal V-shaped cantilever beam and obtained an exact analytical formula based on the resonant frequency, as shown in Figure 16. The formula presents a novel idea that the simplest triangular tapered cantilever yields the largest resonant frequency and the highest sensitivity among all trapezoidal V-cantilevers of uniform thickness, and the sensitivity decreases by increasing the ratio of the trapezoidal bases. Huang et al. [101] proposed a multi-degree-of-freedom broadband vibration energy

harvesting mechanism based on a frequency interval-shortening mechanism to achieve broadband vibration energy harvesting. The experiment was performed with five end-mass, symmetrically distributed U-shaped cantilever beams and a straight beam together, and the output power was experimentally obtained at several different frequencies. The experimental results showed that five voltage peaks occurred within an operating frequency of 10 to 30 Hz. At the same time, the structure exhibited superior performance over the asymmetric M-shaped cantilever beam and also achieved a broader frequency band collection.

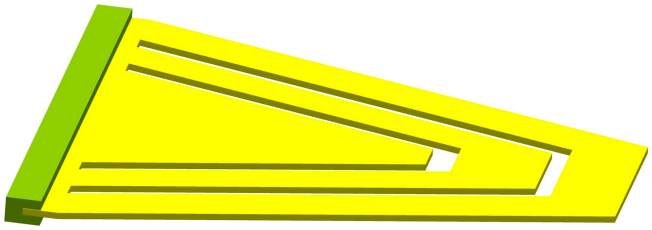

Figure 16. Division of a trapezoidal cantilever beam into some V-shaped beams [100].

Shi et al. [102] also examined broadband piezoelectric vibration energy harvesting. They proposed a structure that consisted of a movable mass block attached to a piezoelectric cantilever beam. It can actively adjust the resonant frequency to match the ambient vibration excitation frequency. This structure uses a micro stepper to adjust the position of the mass block to achieve an adjustable resonant frequency. Experiments showed that the structure reached a maximum extraction efficiency of 84.8% and a frequency spreading rate of 60.56%. Such results provide an excellent example for future broadband harvesting of wide-band collectors.

Table 2 shows the performance of some existing piezoelectric energy harvesting mechanisms. We can see that piezoelectric energy harvesting structures are roughly classified into two categories in terms of classification. One is the impact-type piezoelectric energy harvesting structure. The main operating environment of this structure is under impact excitation, so the energy harvesting structure of the impact type can be used without considering the resonant frequency. The vast majority of impact-type harvesting structures work in impact mode triggered by vibration. From the analysis in the table, it is found that the impact-type energy harvesting structures work in a low-frequency environment, with a frequency range below 50 Hz, mainly concentrated around 10 Hz. Such operating conditions also determine the difficulty of the high-power output of impact-type energy harvesting structures. Therefore, many scholars have tried to expand the collection range of frequency bands by studying adjustable collection structures or seeking to couple with electromagnetism to achieve higher power output.

Table 2. Several different collection structure characteristics.

Refs.	Type	Acceleration (g)	Frequency (Hz)	Power (mW)
Chen et al. [77]	Impact	~	13	0.057
Liu et al. [82]	Impact	1	30–47	~
Naim et al. [89]	Resonance	1	345.75	0.015
Dhakar et al. [98]	Resonance	0.2	36	0.040
Gu et al. [81]	Impact	0.4	8.2	0.43
Li et al. [99]	Resonance	1	14–28	0.050
Yin et al. [84]	Impact	0.6	3.5–15	1.170
Hung et al. [101]	Resonance	0.3	10–30	0.061
Isarakorn et al. [88]	Impact	0.93	14.08	0.820
Halim et al. [85]	Impact	0.6	14.5	0.377

The resonant energy harvesting structure mainly relies on the resonance between the structure and the environmental vibration source to work and achieve the maximum

displacement while obtaining the maximum power output. From the above table, we can see that the resonant type does not require high acceleration in the working environment, and the working frequency band ranges from a dozen Hz to several hundred Hz. As the most common structure of the resonant type, many scholars try to obtain higher power output by changing the cantilever beam structure. From the above table, we can see that the power output of resonant type is not high, which has a strong relationship with the frequency requirement of resonant type in the environment. Thus, how to achieve broadband energy harvesting will be a hot spot for future research in developing resonant energy harvesting structures.

4. Research Progress of PVEH

Vibration in the environment generally has a wide frequency range and is mainly concentrated in the low-frequency region [103]. However, the frequency range of the conventional linear energy harvester is relatively narrow, the frequency is rather high, and the collection efficiency is low [104]. At present, the standard piezoelectric energy harvester adopts the linear method. To broaden the response band of the energy harvester, multiple piezoelectric cantilevers based on linearity can be adopted [105]. However, the limitation of the linear method is still relatively large. Therefore, many scholars have adopted the nonlinear approach to improve the harvester's performance and obtain energy from the broad-spectrum vibration [106].

4.1. Piezoelectric Materials

4.1.1. Piezoelectric Ceramics

Lead in piezoelectric materials can cause pollution. Currently, many scholars are studying piezoelectric energy harvesters for lead-free piezoelectric materials [107]. Minh et al. [108] reported bulk micromachined energy harvesters using KNN film, a lead-free piezoelectric material. Experiments show that the output power of the harvester is 731 nW at the resonant frequency of 1509 Hz, which is similar to a piezoelectric ceramic energy harvester, but its performance needs to be improved. The output power of single-layer piezoelectric ceramics is limited, so stacking piezoceramics becomes an idea to enhance the output performance. Feenstra et al. [109] designed a new energy harvesting backpack that uses piezoelectric stacks to convert the differential forces between the wearer and the backpack into electrical energy to achieve energy harvesting. Abramovich et al. [110] pointed out through experiments that the volume of the material can be increased by placing layers of piezoelectric material one on top of the other, and the mechanical stress of each layer of material is the same, which can yield the required electric power. To meet the extremely high temperature requirements in aerospace, petrochemical, automotive industry, and other fields, researchers have developed an interest in high-temperature piezoelectric ceramic materials. Wang et al. [111] proposed that perovskite-type high-temperature piezoelectric ceramics have better piezoelectric properties than non-perovskite structures and better application prospects. Zhao Haiyan [112] prepared high-temperature piezoelectric ceramics, and the performance of this material was also high, i.e., still practical at 450 °C in the laboratory. Hou et al. [113] studied $BiScO_3$-$PbTiO_3$ (BSPT), a new type of piezoelectric material with a perovskite structure. They pointed out that this material needs further research in terms of calculation methods and material synthesis.

Aluminum nitride is one of the suitable alternatives for piezoelectric materials [114]. AIN piezoelectric film has stable piezoelectric properties, so it can be use under harsh conditions such as high temperatures [115] because the already widely used piezoelectric ceramics have low electromechanical conversion efficiency. In 2016, Zhou Yahui [116] came up with the idea of using AIN film with better physical properties and higher electromechanical conversion efficiency; the piezoelectric performance of the cantilever beam-mass structure using this material needs to be improved through simulation and prototype testing.

4.1.2. Piezoelectric Fiber Composite Materials

Studies have shown that piezoelectric fiber composites have less harmful effects than other piezoelectric materials [117]. Moreover, the devices using piezoelectric fiber composites have higher output voltage and applications in many areas through the research and design of scholars [118]. Shan et al. [119] studied a piezoelectric energy harvester using a large fiber composite MFC in a water vortex. In 2015, they found that the output power of the energy harvester increased with the increase in water velocity. In 2017, Xie Yan [120] studied the output performance of MFC, a kind of material that can produce the piezoelectric effect and is flexible. He found that the resonant frequency of MFC is in the low-frequency range below 30 Hz, which is suitable for collecting the vibration energy in the environment. He also pointed out that increasing the thickness of the fiber layer under certain conditions can increase the output power [121]. The electrodes in MFC are interdigitated electrodes which help electromechanical conversion [122]. For fiber composites, there is also the active fiber composite AFC, except for MFC [123]. However, because of the relatively low efficiency of AFC, its application is limited [124].

We can obtain nanofiber materials by adding nanoparticles in the manufacturing process of piezoelectric composites through electrospinning technology [125] and spin coating [126], which is also one of the current research hotspots in materials. In 2017, Rahim et al. [127] pointed out that the flexible piezoelectric energy harvester using nanomaterials has good mechanical properties under the condition of relatively large strain, but the output power is small. In 2020, Zhou et al. [128] combined 3D printing with nanotechnology to design energy harvesters to power wearable devices. Seongpil et al. [129] designed energy harvesters that use nanoparticles to convert the kinetic energy of gravitational waves on the free surface of the water layer into electric power, but the efficiency is relatively low. Currently, P(VDF-TrFE) has become one of the hot spots for scholars to study. Liu et al. [130] prepared nanocomposites of P(VDF-TrFE) containing different contents of polyhedral oligomeric silsesquioxane (POSS), which have good piezoelectric properties and improved mechanical properties. Arunguvai et al. [131] prepared P(VDF-TrFE) nanocomposite piezoelectric materials to which titanium dioxide and zirconium dioxide were added. Experiments show that both materials can be used to collect vibration energy with inherent frequencies below 100 Hz, and the energy harvesting performance of composite materials with zirconium dioxide was better.

Mokhtari et al. [132] proposed wearable energy generators and sensors using nanostructured hybrid polyvinylidene fluo-ride (PVDF)/reduced graphene oxide (rGO)/barium-titanium oxide (BT) piezo-electric fibers and exploited the enormous variety of textile architectures. Other scholars have conducted a comprehensive review of piezoelectric fibers and smart textiles, proposing the application of wearable piezoelectric flexible textile materials [133].

4.1.3. Alloy Materials

With the development and innovation of material technology, alloy materials have come into the view of scholars. In 2020, Liu et al. [134] considered using Fe-Ga alloy material because of the disadvantages of the limited service life and high charge loss of piezoelectric materials. This material can convert the action of external force into the change of magnetic flux, and then the magnetic field changes. The magnetic field change is converted into an electric potential difference to complete the electromechanical conversion through the Faraday law of electromagnetic induction. The conversion efficiency is the highest when the load value and the impedance value are equal in size. The structure is a cantilever beam, which can widen the effective band by changing the mass of the additional mass block to improve the energy collection capability.

Shape memory alloys have nonlinear mechanical properties that can be used in energy harvesting applications [135]. In 2018, Senthilkumar et al. [136] developed an electromechanical model of an energy harvester using shape memory alloys. Vasundhara et al. [137] modeled a piezoelectric vibration energy harvester with resonant frequency adjustment

by Brinson shape memory alloy plates, verifying that the use of the shape memory alloy could broaden the frequency band and increase the output power. In 2021, Adeodato Arthur et al. [138] used a combination of piezoelectric materials and shape memory alloys to broaden the frequency band. Shape memory alloys present different phase states under varying temperature conditions, so temperature changes can cause a significant shift in the resonant frequency of the system. The use of shape memory alloy can not only broaden the response band but also increase the output power by about 100 times. Therefore, shape memory alloys have very promising applications in piezoelectric energy harvesting.

4.2. Mechanical Structure of the Energy Harvester

A different way of broadening the band is by changing the structure. This method allows the harvester to collect energy in the low-frequency range. In 2014, Halim et al. [139] used mechanical shocks to adapt the frequency response range of the energy harvester by converting low-frequency vibrations in the environment into high-frequency vibrations. They designed the energy harvester to have a higher power output over a broad low-frequency domain. Zhang et al. [83] designed a tunable piezoelectric vibration energy harvester driven by a combination of rope and impact, which is suitable for collecting vibration energy in complex and random environments.

The introduction of auxiliary magnets in the piezoelectric conversion mechanism can also achieve nonlinearity and broaden the frequency band [140]. In 2014, Challa et al. [141] regulated the resonant frequency by permanent magnets, which generate nonlinear forces [142], and the bandwidth was expanded by 40%. Firoozy et al. [143] investigated a harvester consisting of three tip magnets and a piezoelectric cantilever beam to achieve broadband energy harvesting. In 2018, Qingqing Lu [144] proposed a magnetic-induced nonlinear piezoelectric cantilever beam, which used three piezoelectric cantilever beams with free end magnets. This not only broadened the operating band but also increased the output voltage in the frequency domain. In addition to magnets, it is more common to introduce auxiliary springs in the structure to achieve nonlinearity to broaden the frequency band. Aladwani et al. [145] added a dynamic magnifier composed of a spring-mass system, and the effective bandwidth and power increased significantly. Rezaei et al. [146] used the spring as the applied return force, as shown in Figure 17. Both the resonant bandwidth and output voltage increase when the return force is purely nonlinear, and the increase in bandwidth is the greatest when the spring is mounted at the free end.

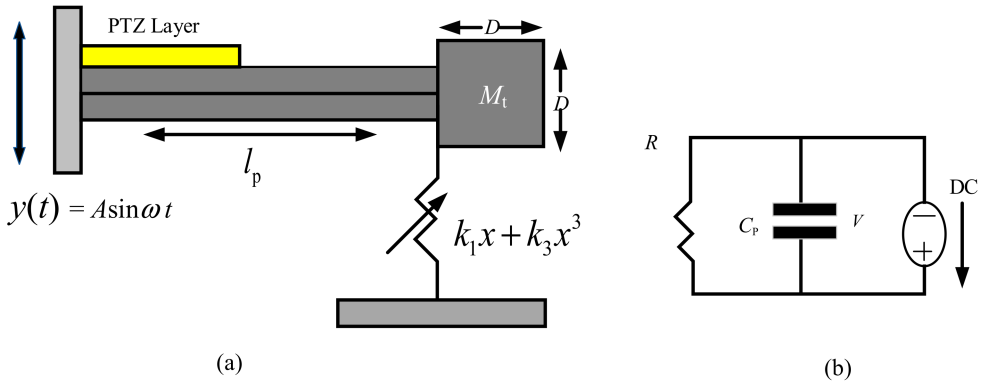

Figure 17. (**a**) Schematic of the energy harvester. (**b**) Simplified electrical circuit [146].

The application of compressive axial preload can also broaden the response band. Leland et al. [147] designed and fabricated a vibration energy harvester that regulates the resonant frequency of a piezoelectric bimorph by applying an axial preload. The resonant frequency of the dual piezoelectric wafer was reduced by 24% compared to without the axial preload after the axial preload was applied. The experimental results show that using a generator with a standard mass of 7.1 g can generate 300–400 mW of power in the frequency range of 200–250 Hz, and using a generator with a standard mass of 12.2 g

can generate 360–650 mW of power in the frequency range of 165–190 Hz. However, this method adversely affects the power output at low frequencies and needs further study. In 2017, Wang et al. [148] designed compact piezoelectric vibration energy harvesters that use various nonlinear techniques such as preload effects and shock effects to modulate resonant frequencies and broaden frequency bands. This energy harvesting device can be applied in environments with relatively high impact forces and is practical with high reliability and economy.

4.3. Dynamics of Energy Harvesters

In 2015, Chen et al. [149] introduced nonlinear forces into a linear piezoelectric energy harvester by adding two permanent magnets. Compared with a simple linear piezoelectric type EH, the nonlinear approach improved the output power and energy conversion efficiency, but its practicality is not high [150]. Marinkovic et al. [151] used "smart sand" to achieve broadband frequency using nonlinear dynamics. They designed an energy harvester that can collect broadband frequency energy from 80–180 Hz at a constant displacement amplitude of 100 microns and from 20–90 Hz at a constant acceleration amplitude of 3 g. The output power of this harvester is relatively large. Nonlinearity is a method widely studied by scholars because of the adaptability of nonlinearity to environmental incentives [152]. However, we should note that the nonlinear response is very sensitive to the gap and excitation. Therefore, the effect of nonlinearity should be considered in piezoelectric coupling when the excitation amplitude changes [153].

4.3.1. Bi-Stable Process

Bi-stable is the transition from one stable state to another [154]. The advantages of the bi-stable process among all nonlinear methods focus on obtaining a significant deformation of the structure, which results in a large power output. Improving the harvester to a bistable state is also a way to achieve nonlinearity, where the voltage amplitude becomes more significant and more suitable for low-frequency conditions [155]. The bistable state has more significant voltage variations than the monostable state, even in the region farther away from the resonant frequency at higher acceleration levels [156]. There are many ways to achieve bi-stable states. Qian et al. [157] studied and designed a magnet-free bi-stable piezoelectric vibration energy harvester inspired by the flytrap, as shown in Figure 18. This energy harvester has two sub-beams, so bending and torsional deformation can be realized in both directions to achieve bi-stable states and broaden the response frequency range. Combining piezoelectricity and magnetism can achieve bi-stable states. In 2011, Ferrari et al. [158] introduced bistability by using a ferromagnetic cantilever that was placed in front of the permanent magnet. The output power and output voltage of such an energy harvester were significantly higher, and the stored energy also increased compared to monostability. In 2013, Arrieta et al. [159] designed a bistable composite material to allow large strains to occur in the cantilever structure, which broadened the frequency band and enhanced the performance. Cao et al. [160] coupled magnetism with piezoelectricity, which exhibited nonlinearity in the case of magnetic inclination variation, as shown in Figure 19. Therefore, the frequency range can be adjusted by adjusting the inclination.

In 2018, Rui et al. [161] studied the magnetically coupled piezoelectric vibration energy harvester and performed a detailed analysis of the parameter optimization. Finally, the final bandwidth was improved by 66.7%. Huang Manjuan [162] studied the nonlinear method to broaden the band considering the low frequency and wide frequency range of the vibration energy in the environment and established the impact-based [163] and bistable energy harvesters. The working frequency of the impact-based energy harvester was reduced from 935 Hz to 25 Hz of the vibration frequency in the environment, and the open-circuit voltage increased by 15 times compared with the single piezoelectric cantilever after the performance test. Though the output power was still at the microwatt level, it increased by 77 times, reaching 8.6 μW. At the same time, the distance between the two beams also affects the open-circuit voltage and output power of the harvester. The total output power

of the piezoelectric-electromagnetic composite energy harvester with the iron core reached 49.7 mW, and the working frequency bandwidth reached 24.2 Hz.

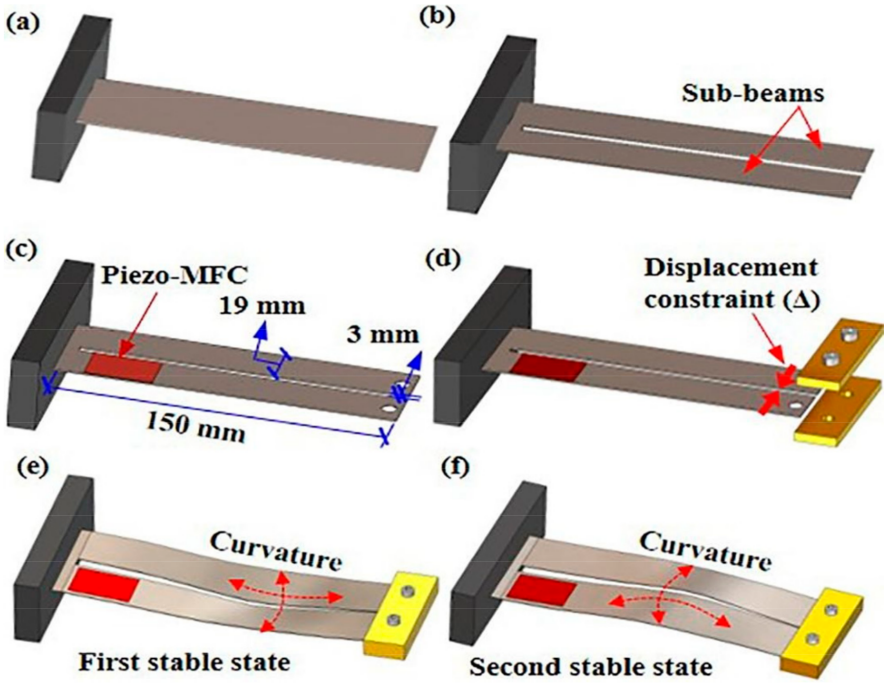

Figure 18. Design of the proposed bio-inspired bi-stable piezoelectric energy harvester: (**a**) cantilever beam, (**b**) tailored cantilever beam with two sub-beams, (**c**) the piezoelectric transducer was attached to one of the sub-beams to harvest vibration energy, (**d**) applied in-plane displacement constraint, (**e**) bi-curved sub-beams under the applied constraint (first stable state), and (**f**) the second stable state [157].

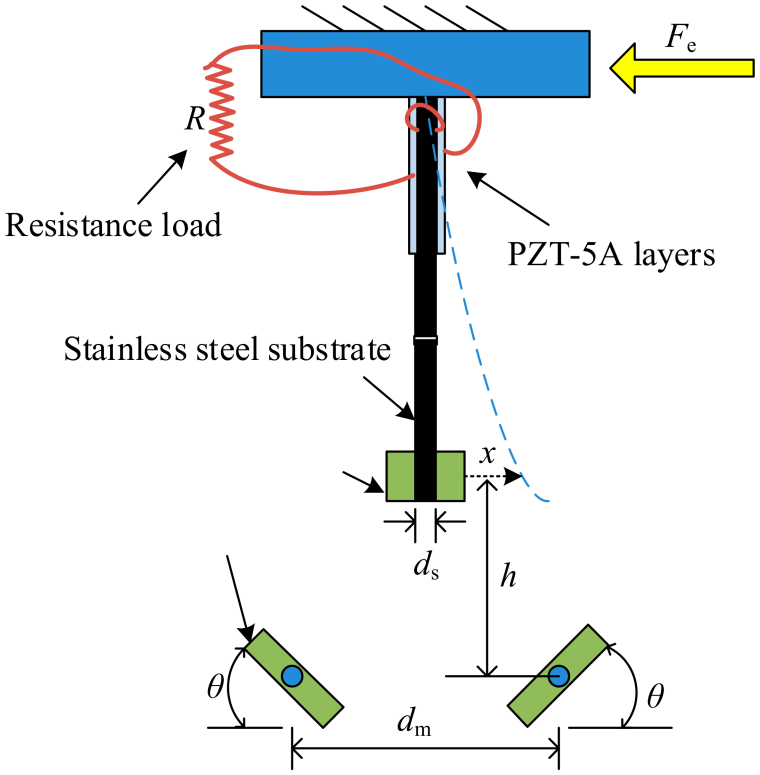

Figure 19. The nonlinear energy harvester with external magnets of variable inclination [160].

The vibration in the environment is multi-directional. Therefore, scholars also study the collection of vibration energy from different directions to reduce the waste of energy. Ando et al. [164] used two magnetically coupled bistable beams to form a two-dimensional broadband nonlinear energy harvester, which achieves energy harvesting in both directions and also increases the output power. Fan et al. [165] added a roller to the piezoelectric vibration energy harvester. The roller can collect the vibration energy of oscillation and single directions. The combination with the piezoelectric cantilever beam can collect the vibration energy of orthogonal and double directions as well as the energy of oscillation through the effect of magnetic coupling. However, factors such as the starting point of the rollers affect the output and need to be further investigated. Fan et al. [166] also coupled a ferromagnetic ball to four piezoelectric cantilever beams, which not only enabled energy harvesting in multiple directions but also introduced nonlinearity and broadened the frequency band. The method with magnetic coupling is essential not only for vibration energy harvesting in the environment but also for converting human motion into high-frequency vibrations for energy harvesting [167].

Scholars have even more novel ideas for the bistable approach. In 2017, Radice et al. [168] introduced relatively rigid elements based on the bi-stable approach to maintain a significant response over an extensive frequency range by collisional binding of relatively rigid elements near stable equilibrium. This demonstrates that the discontinuous nonlinear bistable structure significantly broadens the frequency response range. However, this approach has only been proposed and has not been implemented in bistable devices.

4.3.2. Multi-Stable

Bi-stability refers to two stable states, and the frequency range is increased compared to monostability, but it is still far from what the research hopes to achieve. Many scholars have focused on more stable states and studied tri-stable, quad-stable, and even penta-stable configurations to solve this problem. In 2014, Zhou et al. [169] studied tri-stable states and developed an electromechanical coupling model for nonlinear magnetic restoring force. It was demonstrated experimentally that the tristable state is easier to be excited and achieves high power output [170] over a wide frequency range than the bistable state at different harmonic excitation levels from 1 to 20 Hz. Moreover, the tristable structure is more practical. In 2018, Wang et al. [171] proposed a nonlinear combined energy harvester compounded by a nonlinear spring based on cantilever surface contact and a magnet providing magnetic elasticity for the spring to achieve quadratic stability, which not only broadened the frequency to the low-frequency region but also improved the energy conversion efficiency.

5. Summary and Outlook

This article introduces the mechanism and operation mode of PVEH technology, different excitation types of harvesters, research progress related to piezoelectric vibration energy, and the development prospect of piezoelectric vibration energy technology. It was found that the current piezoelectric energy harvesting technology still has some common problems through combining and analyzing the collected materials, but the type or working mode of the piezoelectric energy harvester has achieved a lot of results at this stage. First is the problem that the energy frequency of the piezoelectric energy harvester to be collected is relatively fixed due to resonance, and the problem of nonlinear energy collection efficiency, especially the problem of piezoelectric and magnetic coupling, needs to be solved while achieving wide-range frequency band collection. The second problem is the energy power output to break through the limits of the milliwatt and microwatt levels, and the required excitation frequency not only in the low-frequency range, as well as the development of high-frequency devices adapted to special conditions. Further, it is necessary to develop piezoelectric materials with a high coupling coefficient, flexibility, and elasticity to deal with the fatigue and cracking of energy harvesting devices. Finally, while introducing multiple modes of coupled energy harvesting to improve performance, the device's size

needs to be reduced to accommodate the increase in power with amplitude in the case of low-frequency vibrations by taking advantage of the developments in the field of materials.

Piezoelectric energy harvesting technology has a lot of achievements in theoretical research. However, the existing research theories are still lacking in solving the power density and working bandwidth, resulting in few piezoelectric products on the market. From the authors' perspective, future piezoelectric energy harvesting technologies may change in the following ways to increase the possibility of translating theoretical findings into practical applications.

(1) Breakthrough single degrees of freedom to achieve multiple degrees of freedom with respect to energy extraction to meet the power output. In addition, the use of a combination of multiple modes, not limited to piezoelectric–electromagnetic or piezoelectric–friction, may be a combination of a piezoelectric–electromagnetic–friction electrical conversion mechanism into a system to improve performance while expanding applicability.
(2) The traditional cantilever beam structure can be changed to a spring device as the response structure of the device, and a regulatory structure is introduced into the structure to adjust the inherent frequency of the device by controlling the spring, thus giving the whole device a frequency modulation function and widening the bandwidth of the collected frequency band. By collecting nonlinear vibration energy, various nonlinear energies are coupled and integrated to achieve high power output.
(3) Adjust the vibration source in the environment to the excitation suitable for the d15 operating mechanism, making the shear mode easily accessible, and breaking the bottleneck of d15 to achieve high power output. At the same time, material technology is used to reduce the device size and power consumption, and the back-end collection circuit is incorporated into the system to enhance the integration capability and flexibility of the device and ensure the output power density.

Author Contributions: Conceptualization, Q.H. and W.Z.; methodology, formal analysis, W.Z.; methodology, D.D.; data curation, Q.C.; visualization, C.L.; project administration, Y.W.; supervision, funding acquisition, Q.H. All authors have read and agreed to the published version of the manuscript.

Funding: This research was funded by the National Key R&D Program of China grant number 2020YFB0905900.

Institutional Review Board Statement: Not applicable.

Informed Consent Statement: Not applicable.

Data Availability Statement: Not applicable.

Conflicts of Interest: The authors declare no conflict of interest.

Nomenclature

m	Vibrator mass, g
d	Damper damping
k_{s}	Stiffness coefficient
Y_{m}	Frame amplitude, mm
f_{p}	Vibration frequency, Hz
ϕ	Phase difference
Z_{m}	Displacement amplitude, mm
F	Inertial force, N
F_{g}	Return force, N
d_{e}	Air damping
ω_{n}	Natural frequency, Hz
P	Output Power, V

Abbreviations

PVEH	Piezoelectric vibration energy harvesting
EH	Energy harvesting
PVDF	Poly(vinylidene fluoride)
IOT	Internet of Things
PEH	Piezoelectric energy harvester
PZT	Lead Zirconate Titanate (piezoelectric ceramic material)
PVDF	Polyvinylidene fluoride
MFC	Macro fiber composite
AFC	Active fiber composite
PVEHS	Piezoelectric vibration energy harvesting structures

References

1. Guan, M.J.; Liao, W.H. On the efficiencies of piezoelectric energy harvesting circuits towards storage device voltages. *Smart Mater. Struct.* **2007**, *16*, 498–505. [CrossRef]
2. Jiang, L.; Yang, Y.; Chen, R.; Lu, G.; Li, R.; Xing, J.; Shung, K.K.; Humayun, M.S.; Zhu, J.; Chen, Y.; et al. Ultrasound-induced wireless energy harvesting for potential retinal electrical stimulation application. *Adv. Funct. Mater.* **2019**, *29*, 1902522. [CrossRef]
3. Yang, Y.; Hu, H.; Chen, Z.; Wang, Z.; Jiang, L.; Lu, G.; Li, X.; Chen, R.; Jin, J.; Kang, H.; et al. Stretchable nanolayered thermoelectric energy harvester on complex and dynamic surfaces. *Nano Lett.* **2020**, *20*, 4445–4453. [CrossRef]
4. Lee, Y. A review of recent research on mm-scale sensor systems. In Proceedings of the 2015 International System-on-Chip Design Conference, Beijing, China, 8–11 September 2015; IEEE: New York, NY, USA, 2015; pp. 87–88.
5. Ziaie, B.; Najafi, K. An implantable microsystem for tonometric blood pressure measurement. *Biomed. Microdevices* **2001**, *3*, 285–292. [CrossRef]
6. Fang, S.; Fu, X.; Du, X.; Du, X.; Liao, W.-H. A music-box-like extended rotational plucking energy harvester with multiple piezoelectric cantilevers. *Appl. Phys. Lett.* **2019**, *114*, 233902. [CrossRef]
7. Jung, I.; Shin, Y.-H.; Kim, S.; Choi, J.-Y.; Kang, C.-Y. Flexible piezoelectric polymer-based energy harvesting system for roadway applications. *Appl. Energy* **2017**, *197*, 222–229. [CrossRef]
8. Naruse, Y.; Matsubara, N.; Mabuchi, K.; Izumi, M.; Suzuki, S. Electrostatic micro power generation from low-frequency vibration such as human motion. *J. Micromech. Microeng.* **2009**, *19*, 094002. [CrossRef]
9. Tan, Q.; Fan, K.; Tao, K.; Zhao, L.; Cai, M. A two-degree-of-freedom string-driven rotor for efficient energy harvesting from ultra-low frequency excitations. *Energy* **2020**, *196*, 117107. [CrossRef]
10. Tao, K.; Wu, J.; Tang, L.; Xia, X.; Lye, S.W.; Miao, J.; Hu, X. A novel two-degree-of-freedom MEMS electromagnetic vibration energy harvester. *J. Micromech. Microeng.* **2016**, *26*, 035020. [CrossRef]
11. Kwak, S.S.; Yoon, H.-J.; Kim, S.-W. Textile-based triboelectric nanogenerators for self-powered wearable electronics. *Adv. Funct. Mater.* **2019**, *29*, 1804533. [CrossRef]
12. Wang, P.; Pan, L.; Wang, J.; Xu, M.; Dai, G.; Zou, H.; Dong, K.; Wang, Z.L. An ultra-low-friction triboelectric-electromagnetic hybrid nanogenerator for rotation energy harvesting and self-powered wind speed sensor. *ACS Nano* **2018**, *12*, 9433–9440. [CrossRef]
13. Wang, J.; Nabawy, M.R.; Cioncolini, A.; Revell, A.; Weigert, S. Planform Geometry and Excitation Effects of PVDF-Based Vibration Energy Harvesters. *Energies* **2021**, *14*, 211. [CrossRef]
14. Zhao, H.; Wei, X.; Zhong, Y.; Wang, P. A direction self-tuning two-dimensional piezoelectric vibration energy harvester. *Sensors* **2019**, *20*, 77. [CrossRef]
15. Roundy, S.; Wright, P.K. A piezoelectric vibration based generator for wireless electronics. *Smart Mater. Struct.* **2004**, *13*, 1131–1142. [CrossRef]
16. Priya, S. Advances in energy harvesting using low profile piezoelectric transducers. *J. Electroceram.* **2007**, *19*, 167–184. [CrossRef]
17. Fei, L.K. *Research of Vibration Energy Harvesting Technologies by Piezoelectric Cantilever Beam*; North China Electric Power University: Beijing, China, 2013.
18. Wang, Z.H. *A Study on Vibration Energy Recovery Device Based on Piezoelectric Ceramic Crystal*; Zhejiang University: Hangzhou, China, 2015.
19. Wong, C.H.; Dahari, Z.; Abd Manaf, A.; Miskam, M.A. Harvesting raindrop energy with piezoelectrics: A review. *J. Electron. Mater.* **2014**, *44*, 13–21. [CrossRef]
20. Liu, T.; Zhao, C.; Zhang, G.; Wang, Y. Research progress on piezoelectric materials in the field of energy harvesting. *Mater. Mech. Eng.* **2020**, *44*, 82–87, 92.
21. Aktakka, E.E.; Najafi, K. Three-axis piezoelectric vibration energy harvester. In Proceedings of the 2015 28th IEEE International Conference on Micro Electro Mechanical Systems: 2015 28th IEEE International Conference on Micro Electro Mechanical Systems (MEMS 2015), Estoril, Portugal, 18–22 January 2015; pp. 1141–1144.
22. Pei, X.; Gao, H. The research state and influence of piezoelectric materials. *Anhui Chem. Ind.* **2010**, *36*, 4–6, 10.

23. Luo, Y.; Yu, Y.; Liao, J.; Jin, Y.; Li, J.; Ye, M. Piezoelectric properties of PVDF-ZnO/GR copolymer films prepared by high voltage electrospinning. *Chin. J. Sens. Actuators* **2019**, *32*, 815–821.
24. Li, B. *Research on the Vibration Energy Harvesting Structure Using Piezoelectric Materials*; Southwest University of Science and Technology: Mianyang, China, 2016.
25. Tang, G. *Multi-Physical Field Coupling Properties of Organic Piezoelectric Materials*; Kunming University of Science and Technology: Kunming, China, 2017.
26. Nunes-Pereira, J.; Sencadas, V.; Correia, V.; Rocha, J.G.; Lanceros-Mendez, S. Energy harvesting performance of piezoelectric electrospun polymer fibers and polymer/ceramic composites. *Sens. Actuators A Phys.* **2013**, *196*, 55–62. [CrossRef]
27. Zhang, X.; Xia, W.; Xing, J.; Feng, Y.; Lu, D. Research progress of polyvinylidence fluoride and its copolymer piezoelectric composites. *Acta Mater. Compos. Sin.* **2021**, *38*, 997–1019.
28. Zhao, J.; Li, F.; Wang, Z.; Dong, P.; Xia, G.; Wang, K. Flexible PVDF nanogenerator-driven motion sensors for human body motion energy tracking and monitoring. *J. Mater. Sci.-Mater. Electron.* **2021**, *32*, 14715–14727. [CrossRef]
29. Bowen, C.R.; Kim, H.A.; Weaver, P.M.; Dunn, S. Piezoelectric and ferroelectric materials and structures for energy harvesting applications. *Energy Environ. Sci.* **2014**, *7*, 25–44. [CrossRef]
30. Yan, Z. Research on Theory and Key Technologies of Piezoelectric Vibration Generator for Improving Generating Capacity. Ph.D. Thesis, North China Electric Power University, Beijing, China, 2012.
31. Williams, C.B.; Yates, R.B. Analysis of a micro-electric generator for microsystems. *Sens. Actuators A Phys.* **1996**, *52*, 8–11. [CrossRef]
32. Wu, L. *Research and Design Piezoelectric Energy Harvesting ICs*; Hunan University: Changsha, China, 2017.
33. Qian, F.; Zhou, W.; Kaluvan, S.; Zhang, H.; Zuo, L. Theoretical modeling and experimental validation of a torsional piezoelectric vibration energy harvesting system. *Smart Mater. Struct.* **2018**, *27*, 045018. [CrossRef]
34. Rödig, T.; Schönecker, A.; Gerlach, G. A survey on piezoelectric ceramics for generator applications. *J. Am. Ceram. Soc.* **2010**, *93*, 901–912. [CrossRef]
35. Edery-Azulay, L.; Abramovich, H. Piezoelectric actuation and sensing mechanisms-closed form solutions. *Compos. Struct.* **2004**, *64*, 443–453. [CrossRef]
36. Ma, M.; Xia, S.; Li, Z.; Xu, Z.; Yao, X. Enhanced energy harvesting performance of the piezoelectric unimorph with perpendicular electrodes. *Appl. Phys. Lett.* **2014**, *105*, 043905. [CrossRef]
37. Gao, X.; Qiu, C.; Li, G.; Ma, M.; Yang, S.; Xu, Z.; Li, F. High output power density of a shear-mode piezoelectric energy harvester based on $Pb(In_{1/2}Nb_{1/2})O_3$-$Pb(Mg_{1/3}Nb_{2/3})O_3$-$PbTiO_3$ single crystals. *Appl. Energy* **2020**, *271*, 115193. [CrossRef]
38. Ren, B.; Or, S.W.; Wang, F.; Zhao, X.; Luo, H.; Li, X.; Zhang, Q.; Di, W.; Zhang, Y. Piezoelectric energy harvesting based on shear mode $0.71Pb(Mg_{(1/3)}Nb_{(2/3)})O_3$-$0.29PbTiO_3$ single crystals. *IEEE Trans. Ultrason. Ferroelectr. Freq. Control* **2010**, *57*, 1419–1425. [CrossRef]
39. Zhou, L.; Sun, J.; Zheng, X.J.; Deng, S.F.; Zhao, J.H.; Peng, S.T.; Zhang, Y.; Wang, X.Y.; Cheng, H.B. A model for the energy harvesting performance of shear mode piezoelectric cantilever. *Sens. Actuators A Phys.* **2012**, *179*, 185–192. [CrossRef]
40. Wang, Z. Self-powered nanotech—Nanosize machines need still tinier power plants. *Sci. Am.* **2008**, *298*, 82–87. [CrossRef]
41. Wang, Z. The new field of nanopiezotronics. *Mater. Today* **2007**, *10*, 20–28. [CrossRef]
42. Anton, S.R.; Sodano, H.A. A review of power harvesting using piezoelectric materials (2003–2006). *Smart Mater. Struct.* **2007**, *16*, R1–R21. [CrossRef]
43. Majidi, C.; Haataja, M.; Srolovitz, D.J. Analysis and design principles for shear-mode piezoelectric energy harvesting with ZnO nanoribbons. *Smart Mater. Struct.* **2010**, *19*, 055027. [CrossRef]
44. Chen, S.C.; Cheng, C.H.; Lin, Y.C. Analysis and experiment of a novel actuating design with a shear mode PZT actuator for microfluidic application. *Sens. Actuators A Phys.* **2007**, *135*, 1–9. [CrossRef]
45. Zeng, Z.; Ren, B.; Gai, L.; Zhao, X.; Luo, H.; Wang, D. Shear-mode-based cantilever driving low-frequency piezoelectric energy harvester using $0.67Pb(Mg_{1/3}Nb_{2/3})O_3$-$0.33PbTiO_3$. *IEEE Trans. Ultrason. Ferroelectr. Freq. Control* **2016**, *63*, 1192–1197. [CrossRef]
46. Wang, D.A.; Liu, N.Z. A shear mode piezoelectric energy harvester based on a pressurized water flow. *Sens. Actuators A Phys.* **2011**, *167*, 449–458. [CrossRef]
47. Kim, S.B.; Park, H.; Kim, S.H.; Wikle, H.C.; Park, J.H.; Kim, D.J. Comparison of MEMS PZT Cantilevers Based on d31 and d33 Modes for Vibration Energy Harvesting. *J. Microelectromech. Syst.* **2013**, *22*, 26–33. [CrossRef]
48. Choi, W.J.; Jeon, Y.; Jeong, J.-H.; Sood, R.; Kim, S.G. Energy harvesting MEMS device based on thin film piezoelectric cantilevers. *J. Electroceram.* **2006**, *17*, 543–548. [CrossRef]
49. Park, J.C.; Park, J.Y.; Lee, Y.-P. Modeling and characterization of piezoelectric d33-mode MEMS energy harvester. *J. Microelectromech. Syst.* **2010**, *19*, 1215–1222. [CrossRef]
50. Kim, S.B.; Park, J.H.; Kim, S.H.; Ahn, H.; Wikle, H.C.; Kim, D.J. Modeling and evaluation of d33 mode piezoelectric energy harvesters. *J. Micromech. Microeng.* **2012**, *22*, 105013. [CrossRef]
51. Shen, Z.; Liu, S.; Miao, J.; Woh, L.S.; Wang, Z. Proof mass effects on spiral electrode d33 mode piezoelectric diaphragm-based energy harvester. In Proceedings of the IEEE Micro Electro Mechanical Systems, Taipei, Taiwan, 20–24 January 2013; pp. 821–824.
52. Sun, C.; Shang, G.; Zhu, X.; Tao, Y.; Li, Z. Modeling for Piezoelectric Stacks in Series and Parallel. In Proceedings of the 2013 Third International Conference on Intelligent System Design and Engineering Applications (ISDEA), Hong Kong, China, 16–18 January 2013; pp. 954–957.

53. Kashyap, R.; Lenka, T.R.; Baishya, S. Distributed parameter modeling of cantilevered-d33-mode piezoelectric energy harvesters. *IEEE Trans. Electron Devices* **2016**, *63*, 1281–1287. [CrossRef]
54. Ahmad, K.A.; Abdullah, N.; Manaf, A.A. D33 mode based piezoelectric micromachined ultrasonic transducers. In Proceedings of the 2017 IEEE 15th Student Conference on Research and Development, Putrajaya, Malaysia, 13–14 December 2017; pp. 158–161.
55. Tang, G.; Yang, B.; Liu, J.Q.; Xu, B.; Zhu, H.Y.; Yang, C.S. Development of high performance piezoelectric d33 mode MEMS vibration energy harvester based on PMN-PT single crystal thick film. *Sens. Actuators A Phys.* **2014**, *205*, 150–155. [CrossRef]
56. Wang, J.; Li, G.; Zhou, S.; Litak, G. Enhancing wind energy harvesting using passive turbulence control devices. *Appl. Sci.* **2019**, *9*, 998. [CrossRef]
57. Wu, J.; Chen, X.; Chu, Z.; Shi, W.; Yu, Y.; Dong, S. A barbell-shaped high-temperature piezoelectric vibration energy harvester based on $BiScO_3$-$PbTiO_3$ ceramic. *Appl. Phys. Lett.* **2016**, *109*, 173901. [CrossRef]
58. Liu, J.; Gao, X.; Qiu, C.; Qiao, L.; Yang, J.; Ma, M.; Song, K.; Guo, H.; Xu, Z.; Li, F. High output power density and strong vibration durability in a modified barbell-shaped energy harvester based on multilayer $Pb(In_{1/2}Nb_{1/2})O_3$-$Pb(Mg_{1/3}Nb_{2/3})O_3$-$PbTiO_3$ single crystals. *APL Mater.* **2021**, *9*, 010703. [CrossRef]
59. Qian, F.; Xu, T.-B.; Zuo, L. A distributed parameter model for the piezoelectric stack harvester subjected to general periodic and random excitations. *Eng. Struct.* **2018**, *173*, 191–202. [CrossRef]
60. Lu, F.; Lee, H.P.; Lim, S.P. Modeling and analysis of micro piezoelectric power generators for micro-electromechanical-systems applications. *Smart Mater. Struct.* **2004**, *13*, 57–63. [CrossRef]
61. Fang, H.B.; Liu, J.Q.; Xu, Z.Y.; Dong, L.; Wang, L.; Chen, D.; Cai, B.C.; Liu, Y. Fabrication and performance of MEMS-based piezoelectric power generator for vibration energy harvesting. *Microelectron. J.* **2006**, *37*, 1280–1284. [CrossRef]
62. Sodano, H.A.; Wang, C.C.; Shih, Y.-S.; Lin, S.-C.; Zeng, J.-Y.; Wu, W.-J. A micro piezoelectric energy harvester based on stainless steel substrate with dual oscillators. *Proc. SPIE* **2013**, *8688*, 86880E.
63. Zhang, Y.; Lee, C.H. Piezoelectric energy harvesting pedal integrated with a compliant load amplifier. *Adv. Mech. Eng.* **2019**, *11*, 1687814018820142. [CrossRef]
64. Yang, B.; Zhu, Y.; Wang, X.; Liu, J.Q.; Chen, X.; Yang, C. High performance PZT thick films based on bonding technique for d31 mode harvester with integrated proof mass. *Sens. Actuators A Phys.* **2014**, *214*, 88–94. [CrossRef]
65. Guan, M.; Li, Y.; Zhao, Y. A novel frequency tunable mechanism for piezoelectric energy harvesting system. *Ferroelectrics* **2015**, *478*, 96–105. [CrossRef]
66. Banerjee, S.; Roy, S. A timoshenko like model for piezoelectric energy harvester with shear mode. *Compos. Struct.* **2018**, *204*, 677–688. [CrossRef]
67. Singh, R.; Pant, B.D.; Jain, A. Simulations, fabrication, and characterization of d31 mode piezoelectric vibration energy harvester. *Microsyst. Technol.* **2019**, *26*, 1499–1505. [CrossRef]
68. Wang, C.; Yu, G.; Cao, H.; Wang, S.; Li, Y. Structure simulation optimization and test verification of piezoelectric energy harvester device for road. *Sens. Actuators A Phys.* **2020**, *315*, 112322. [CrossRef]
69. Palosaari, J.; Leinonen, M.; Hannu, J.; Juuti, J.; Jantunen, H. Energy harvesting with a cymbal type piezoelectric transducer from low frequency compression. *J. Electroceram.* **2012**, *28*, 214–219. [CrossRef]
70. Wu, J.; Shi, H.; Zhao, T.; Yu, Y.; Dong, S. High-Temperature $BiScO_3$-$PbTiO_3$ Piezoelectric Vibration Energy Harvester. *Adv. Funct. Mater.* **2016**, *26*, 7186–7194. [CrossRef]
71. Zhou, M.; Al-Furjan MS, H.; Zou, J.; Liu, W. A review on heat and mechanical energy harvesting from human—Principles, prototypes and perspectives. *Renew. Sustain. Energy Rev.* **2018**, *82*, 3582–3609. [CrossRef]
72. Zhou, M.; Zhao, H. Revisit to the theoretical analysis of a classical piezoelectric vibration energy harvester. *Arch. Appl. Mech.* **2020**, *90*, 2379–2395. [CrossRef]
73. Ottman, G.K.; Hofmann, H.F.; Bhatt, A.C.; Lesieutre, G.A. Adaptive piezoelectric energy harvesting circuit for wireless remote power supply. *IEEE Trans. Power Electron.* **2002**, *17*, 669–676. [CrossRef]
74. Howells, C.A. Piezoelectric energy harvesting. *Energy Convers. Manag.* **2009**, *50*, 1847–1850. [CrossRef]
75. Roundy, S.; Wright, P.K.; Rabaey, J. A study of low level vibrations as a power source for wireless sensor nodes. *Comput. Commun.* **2003**, *26*, 1131–1144. [CrossRef]
76. Chen, C.D.; Wu, Y.H.; Su, P.W. Dynamic modeling and experimental validation of an impact-driven piezoelectric energy harvester in magnetic field. *Sensors* **2020**, *20*, 6170. [CrossRef]
77. Chen, S.; Hu, J. Experimental study of a hybrid vibration energy harvesting mechanism. In Proceedings of the 2011 Symposium on Piezoelectricity, Acoustic Waves and Device Applications (SPAWDA), Shenzhen, China, 9–11 December 2011; 2011; Volume 15, pp. 56–59.
78. Al Ahmad, M. Piezoelectric water drop energy harvesting. *J. Electron. Mater.* **2013**, *43*, 452–458. [CrossRef]
79. Ilyas, M.A.; Swingler, j. Piezoelectric energy harvesting from raindrop impacts. *Energy* **2015**, *90*, 796–806. [CrossRef]
80. Liu, H.; Tay, C.J.; Quan, C.; Kobayashi, T.; Lee, C. Piezoelectric MEMS energy harvester for low-frequency vibrations with wideband operation range and steadily increased output power. *J. Microelectromech. Syst.* **2011**, *20*, 1131–1142. [CrossRef]
81. Gu, L.; Livermore, C. Impact-driven, frequency up-converting coupled vibration energy harvesting device for low frequency operation. *Smart Mater. Struct.* **2011**, *20*, 045004. [CrossRef]
82. Liu, H.; Lee, C.; Kobayashi, T.; Tay, C.J.; Quan, C. Investigation of a MEMS piezoelectric energy harvester system with a frequency-widened-bandwidth mechanism introduced by mechanical stoppers. *Smart Mater. Struct.* **2012**, *21*, 035005. [CrossRef]

83. Zhang, J.; Qin, L. A tunable frequency up-conversion wideband piezoelectric vibration energy harvester for low-frequency variable environment using a novel impact- and rope-driven hybrid mechanism. *Appl. Energy* **2019**, *240*, 26–34. [CrossRef]
84. Yin, Z.; Gao, S.; Jin, L.; Sun, Y.; Wu, Q.; Zhang, X.; Guo, S. A dual impact driven frequency up-conversion piezoelectric energy harvester for ultralow-frequency and wide-bandwidth operation. *Sens. Actuators A Phys.* **2021**, *331*, 112961. [CrossRef]
85. Halim, M.A.; Khym, S.; Park, J.Y. Frequency up-converted wide bandwidth piezoelectric energy harvester using mechanical impact. *J. Appl. Phys.* **2013**, *114*, 044902. [CrossRef]
86. Vijayan, K.; Friswell, M.I.; Khodaparast, H.H.; Adhikari, S. Non-linear energy harvesting from coupled impacting beams. *Int. J. Mech. Sci.* **2015**, *96–97*, 101–109. [CrossRef]
87. Halim, M.A.; Park, J.Y. Piezoceramic based wideband energy harvester using impact-enhanced dynamic magnifier for low frequency vibration. *Ceram. Int.* **2015**, *41*, S702–S707. [CrossRef]
88. Isarakorn, D.; Jayasvasti, S.; Panthongsy, P.; Janphuang, P.; Hamamoto, K. Design and evaluation of double-stage energy harvesting floor tile. *Sustainability* **2019**, *11*, 5582. [CrossRef]
89. Mokhtari, F.; Shamshirsaz, M.; Latifi, M.; Foroughi, J. Nanofibers-based piezoelectric energy harvester for self-powered wearable technologies. *Polymers* **2020**, *12*, 2697. [CrossRef]
90. DuToit, N.E.; Wardle, B.L. Experimental verification of models for microfabricated piezoelectric vibration energy harvesters. *AIAA J.* **2007**, *45*, 1126–1137. [CrossRef]
91. Erturk, A.; Inman, D.J. A distributed parameter electromechanical model for cantilevered piezoelectric energy harvesters. *J. Vib. Acoust.—Trans. ASME* **2008**, *130*, 041002. [CrossRef]
92. Erturk, A.; Inman, D.J. An experimentally validated bimorph cantilever model for piezoelectric energy harvesting from base excitations. *Smart Mater. Struct.* **2009**, *18*, 025009. [CrossRef]
93. Magoteaux, K.C.; Sanders, B.; Sodano, H.A. Investigation of an energy harvesting small unmanned air vehicle. *Act. Passiv. Smart Struct. Integr. Syst.* **2008**, *6928*, 692823.
94. Erturk, A.; Renno, J.M.; Inman, D.J. Modeling of piezoelectric energy harvesting from an l-shaped beam-mass structure with an application to UAVs. *J. Intell. Mater. Syst. Struct.* **2009**, *20*, 529–544. [CrossRef]
95. Liu, J.-Q.; Fang, H.-B.; Xu, Z.-Y.; Mao, X.-H.; Shen, X.-C.; Chen, D.; Liao, H.; Cai, B.-C. A MEMS-based piezoelectric power generator array for vibration energy harvesting. *Microelectron. J.* **2008**, *39*, 802–806. [CrossRef]
96. Luo, C.; Hofmann, H.F. Wideband energy harvesting for piezoelectric devices with linear resonant behavior. *IEEE Trans. Ultrason. Ferroelectr. Freq. Control* **2011**, *58*, 1294–1301.
97. Stein, A.; Hofmann, H. Resonant inverter design for stand-alone dynamic active piezoelectric energy harvesting. In Proceedings of the 2015 Thirtieth Annual IEEE Applied Power Electronics Conference and Exposition (APEC 2015), Charlotte, NC, USA, 15–19 March 2015; pp. 3265–3271.
98. Dhakar, L.; Liu, H.; Tay FE, H.; Lee, C. A new energy harvester design for high power output at low frequencies. *Sens. Actuators A Phys.* **2013**, *199*, 344–352. [CrossRef]
99. Li, S.; Peng, Z.; Zhang, A.; Wang, F. Dual resonant structure for energy harvesting from random vibration sources at low frequency. *J. Technol. Sci.* **2016**, *6*, 2158–3226. [CrossRef]
100. Hosseini, R.; Hamedi, M. An investigation into resonant frequency of trapezoidal V-shaped cantilever piezoelectric energy harvester. *Microsyst. Technol.* **2015**, *22*, 1127–1134. [CrossRef]
101. Huang, X.; Zhang, C.; Dai, K. A multi-mode broadband vibration energy harvester composed of symmetrically distributed u-shaped cantilever beams. *Micromachines* **2021**, *12*, 203. [CrossRef]
102. Shi, G.; Xia, Y.; Yang, Y.; Chen, J.; Peng, Y.; Xia, H.; Wang, X.; Qian, L. A sensorless self-tuning resonance system for piezoelectric broadband vibration energy harvesting. *IEEE Trans. Ind. Electron.* **2021**, *68*, 2225–2235. [CrossRef]
103. Jing, L.; Huo, R.; Wang, W.; Li, C. Design and performance analysis of the low-frequency and broadband piezoelectric energy harvester. *Piezoelectrics Acoustooptics* **2018**, *40*, 491–495.
104. Stanton, S.C.; McGehee, C.C.; Mann, B.P. Nonlinear dynamics for broadband energy harvesting: Investigation of a bistable piezoelectric inertial generator. *Phys. D Nonlinear Phenom.* **2010**, *239*, 640–653. [CrossRef]
105. Liu, X.J.; Chen, R.W. Current situation and developing trend of piezoelectric vibration energy harvesters. *J. Vib. Shock* **2012**, *31*, 169–176.
106. Ferrari, M.; Ferrari, V.; Guizzetti, M.; Ando, B.; Baglio, S.; Trigona, C. Improved energy harvesting from wideband vibrations by nonlinear piezoelectric converters. *Procedia Chem.* **2009**, *1*, 1203–1206. [CrossRef]
107. Wu, J. *Advances in Lead-Free Piezoelectric Materials*; Springer: Singapore, 2018.
108. Le Van, M.; Hara, M.; Horikiri, F.; Shibata, K.; Mishima, T.; Kuwano, H. Bulk micromachined energy harvesters employing (K, Na)NbO_3 thin film. *J. Micromechan. Microeng.* **2013**, *23*, 035029.
109. Feenstra, J.; Granstrom, J.; Sodano, H. Energy harvesting through a backpack employing a mechanically amplified piezoelectric stack. *Mech. Syst. Signal Processing* **2008**, *22*, 721–734. [CrossRef]
110. Abramovich, H.; Tsikchotsky, E.; Klein, G. An experimental investigation on PZT behavior under mechanical and cycling loading. *J. Mech. Behav. Mater.* **2013**, *22*, 129–136. [CrossRef]
111. Wang, D.; Wang, A.; Wang, W.; Li, L.; Zhang, Y.; Zhai, J. Current development and application of piezoelectric ceramic materials with high curie temperatures. *J. Ceram.* **2021**, *42*, 376–388.

112. Zhao, H. *Construction and Property Modulation of Piezoelectric Materials for High Temperature Energy Harvesting*; Beijing University of Technology: Beijing, China, 2020.
113. Hou, Y.; Zhao, H.; Zheng, M.; Zhu, M.; Yan, H. BSPT-based high temperature piezoelectric materials: Opportunities and challenges. *J. Beijing Univ. Technol.* **2020**, *46*, 664–679.
114. Stoppel, F.; Schröder, C.; Senger, F.; Wagner, B.; Benecke, W. AlN-based piezoelectric micropower generator for low ambient vibration energy harvesting. *Procedia Eng.* **2011**, *25*, 721–724. [CrossRef]
115. Chung, G.S.; Lee, B.C. Fabrication and characterization of vibration-driven AlN piezoelectric micropower generator compatible with complementary metal-oxide semiconductor process. *J. Intell. Mater. Syst. Struct.* **2014**, *26*, 1971–1979. [CrossRef]
116. Zhou, Y. *Study on Key Technology of Miniature AIN Piezoelectric Vibrating Energy Harvester*; Chongqing University: Chongqing, China, 2017.
117. Swallow, L.M.; Luo, J.K.; Siores, E.; Patel, I.; Dodds, D. A piezoelectric fibre composite based energy harvesting device for potential wearable applications. *Smart Mater. Struct.* **2008**, *17*, 025017. [CrossRef]
118. Yang, X.; Shen, J.; Wang, F.; Zhou, J. Simulation of energy harvesting of piezoelectric fiber composites. *J. Chin. Ceram. Soc.* **2019**, *47*, 1283–1287.
119. Shan, X.; Song, R.; Liu, B.; Xie, T. Novel energy harvesting: A macro fiber composite piezoelectric energy harvester in the water vortex. *Ceram. Int.* **2015**, *41*, S763–S767. [CrossRef]
120. Xie, Y. *The Fabrication and Electric Output Performance of Macro Fiber Composites*; Wuhan University of Technology: Wuhan, China, 2017.
121. Xie, Y.; Zhou, J.; Shen, J.; Yang, X. Influence of fiber thickness and spacing between interdigitated electrodes on MFC's electricity output performance. *Bull. Chin. Ceram. Soc.* **2017**, *36*, 4193–4197.
122. Bent, A.A.; Hagood, N.W. Piezoelectric fiber composites with interdigitated electrodes. *J. Intell. Mater. Syst. Struct.* **1997**, *8*, 903–919. [CrossRef]
123. Paradies, R.; Melnykowycz, M. Numerical stress investigation for piezoelectric elements with a circular cross section and interdigitated electrodes. *J. Intell. Mater. Syst. Struct.* **2007**, *18*, 963–972. [CrossRef]
124. Lu, F. *Fabrication and Properties of Piezoelectric Fiber Composites*; University of Jinan: Jinan, China, 2016.
125. Ren, G.Y.; Cai, F.Y.; Zheng, J.M.; Xu, C.Y. Flexible force sensor based on nanofiber fabrics of Poly (Vinylidene Fluoride-Trifluoroethylene). *J. Funct. Polym.* **2012**, *25*, 109–113.
126. Yaqoob, U.; Habibur, R.M.; Sheeraz, M.; Kim, H.C. Realization of self-poled, high performance, flexible piezoelectric energy harvester by employing PDMS-rGO as sandwich layer between P(VDF-TrFE)-PMN-PT composite sheets. *Compos. Part B Eng.* **2019**, *159*, 259–268. [CrossRef]
127. Rahim, N.F.; Ong, N.R.; Aziz MH, A.; Alcain, J.B.; Haimi WM, W.N.; Sauli, Z. Modelling of cantilever based on piezoelectric energy harvester. *AIP Conf. Proc.* **2017**, *1885*, 020301.
128. Zhou, X.; Parida, K.; Halevi, O.; Liu, Y.; Xiong, J.; Magdassi, S.; Lee, P.S. All 3D-printed stretchable piezoelectric nanogenerator with non-protruding kirigami structure. *Nano Energy* **2020**, *72*, 104676. [CrossRef]
129. An, S.; Jo, H.S.; Li, G.; Samuel, E.; Yoon, S.S.; Yarin, A.L. Sustainable nanotextured wave energy harvester based on ferroelectric fatigue-free and flexoelectricity-enhanced piezoelectric P(VDF-TrFE) nanofibers with $BaSrTiO_3$ nanoparticles. *Adv. Funct. Mater.* **2020**, *30*, 2001150. [CrossRef]
130. Liu, Y.Z.; Zhang, H.; Yu, J.X.; Huang, Z.Y.; Wang, C.; Sun, Y. Ferroelectric P(VDF-TrFE)/POSS nanocomposite films: Compatibility, piezoelectricity, energy harvesting performance, and mechanical and atomic oxygen erosion. *RSC Adv.* **2020**, *10*, 17377–17386. [CrossRef]
131. Arunguvai, J.; Lakshmi, P. Influence of ZrO_2 and TiO_2 nano particles in P(VDF-TrFE) composite for energy harvesting application. *J. Mater. Sci. Mater. Electron.* **2021**, *32*, 12223–12231.
132. Mokhtari, F.; Spinks, G.M.; Sayyar, S.; Cheng, Z.; Ruhparwar, A.; Foroughi, J. Highly Stretchable Self-Powered Wearable Electrical Energy Generator and Sensors. *Adv. Mater. Technol.* **2020**, *6*, 2000841. [CrossRef]
133. Mokhtari, F.; Cheng, Z.; Raad, R.; Xi, J.; Foroughi, J. Piezofibers to smart textiles: A review on recent advances and future outlook for wearable technology. *J. Mater. Chem. A* **2020**, *8*, 9496–9522. [CrossRef]
134. Liu, H.; Zhao, Q.; Gao, S.; Zhang, J. Tests for collection of vibration and power generation characteristics with Fe-GA alloy material. *J. Vib. Shock* **2020**, *39*, 132–139, 150.
135. Li, D.Z.; Feng, Z.C. Dynamic properties of pseudoelastic shape memory alloys. *Smart Struct.* **1997**, *3041*, 715–725.
136. Senthilkumar, M.; Vasundhara, M.G.; Kalavathi, G.K. Electromechanical analytical model of shape memory alloy based tunable cantilevered piezoelectric energy harvester. *Int. J. Mech. Mater. Des.* **2018**, *15*, 611–627. [CrossRef]
137. Vasundhara, M.G.; Senthilkumar, M.; Kalavathi, G.K. A distributed parametric model of Brinson shape memory alloy based resonant frequency tunable cantilevered PZT energy harvester. *Int. J. Mech. Mater. Des.* **2019**, *15*, 555–568. [CrossRef]
138. Adeodato, A.; Duarte, B.T.; Monteiro LL, S.; Pacheco PM, C.; Savi, M.A. Synergistic use of piezoelectric and shape memory alloy elements for vibration-based energy harvesting. *Int. J. Mech. Sci.* **2021**, *194*, 106206. [CrossRef]
139. Halim, M.A.; Park, J.Y. Theoretical modeling and analysis of mechanical impact driven and frequency up-converted piezoelectric energy harvester for low-frequency and wide-bandwidth operation. *Sens. Actuators A Phys.* **2014**, *208*, 56–65. [CrossRef]
140. Tang, L.; Yang, Y. A nonlinear piezoelectric energy harvester with magnetic oscillator. *Appl. Phys. Lett.* **2012**, *101*, 094102. [CrossRef]

141. Challa, V.R.; Prasad, M.G.; Shi, Y.; Fisher, F.T. A vibration energy harvesting device with bidirectional resonance frequency tunability. *Smart Mater. Struct.* **2008**, *17*, 015035. [CrossRef]
142. Wu, Y.; Ji, H.; Qiu, J.; Zhang, H. A nonlinear piezoelectric vibration energy harvesting device with tunable resonance frequencies. *J. Vib. Shock* **2017**, *36*, 12–16, 22.
143. Firoozy, P.; Khadem, S.E.; Pourkiaee, S.M. Broadband energy harvesting using nonlinear vibrations of a magnetopiezoelastic cantilever beam. *Int. J. Eng. Sci.* **2017**, *111*, 113–133. [CrossRef]
144. Lu, Q. *Structure Design and Electro-Mechanical Performance Analysis of Vibration Piezoelectric Composite Energy Harvester*; Harbin Institute of Technology: Harbin, China, 2019.
145. Aladwani, A.; Arafa, M.; Aldraihem, O.; Baz, A. Cantilevered piezoelectric energy harvester with a dynamic magnifier. *J. Vib. Acoust.* **2012**, *134*, 031004. [CrossRef]
146. Rezaei, M.; Khadem, S.E.; Firoozy, P. Broadband and tunable PZT energy harvesting utilizing local nonlinearity and tip mass effects. *Int. J. Eng. Sci.* **2017**, *118*, 1–15. [CrossRef]
147. Leland, E.S.; Wright, P.K. Resonance tuning of piezoelectric vibration energy scavenging generators using compressive axial preload. *Smart Mater. Struct.* **2006**, *15*, 1413–1420. [CrossRef]
148. Wang, X.; Chen, C.; Wang, N.; San, H.; Yu, Y.; Halvorsen, E.; Chen, X. A frequency and bandwidth tunable piezoelectric vibration energy harvester using multiple nonlinear techniques. *Appl. Energy* **2017**, *190*, 368–375. [CrossRef]
149. Chen, D.; Shen, W.; Tao, M.; Li, L. Simulation study of nonlinear piezoelectric beam array vibration energy harvester. In Proceedings of the 2015 Fifth Annual Conference of National Local Mechanical Engineering Society and China Manufacturing 2025 Development Forum, Yunnan, China, 11 November 2015; pp. 800–806.
150. Shen, W.; Tao, M.; Chen, D.; Liu, H.; Li, P.; Ming, T. Simulation of nonlinear piezoelectric beam array vibration energy harvester. *J. Wuhan Univ. Technol. (Inf. Manag. Eng.)* **2015**, *37*, 436–439.
151. Marinkovic, B.; Koser, H. Demonstration of wide bandwidth energy harvesting from vibrations. *Smart Mater. Struct.* **2012**, *21*, 065006. [CrossRef]
152. Fan, K.; Tan, Q.; Liu, H.; Zhang, Y.; Cai, M. Improved energy harvesting from low-frequency small vibrations through a monostable piezoelectric energy harvester. *Mech. Syst. Signal Processing* **2019**, *117*, 594–608. [CrossRef]
153. Triplett, A.; Quinn, D.D. The effect of non-linear piezoelectric coupling on vibration-based energy harvesting. *J. Intell. Mater. Syst. Struct.* **2009**, *20*, 1959–1967. [CrossRef]
154. Harne, R.L.; Wang, K.W. A review of the recent research on vibration energy harvesting via bistable systems. *Smart Mater. Struct.* **2013**, *22*, 023001. [CrossRef]
155. Sun, S.; Cao, S. Electrical performance analysis of a bistable piezoelectric cantilever. *Piezoelectrics Acoustooptics* **2013**, *35*, 540–544, 548.
156. Masana, R.; Daqaq, M.F. Response of duffing-type harvesters to band-limited noise. *J. Sound Vib.* **2013**, *332*, 6755–6767. [CrossRef]
157. Qian, F.; Hajj, M.R.; Zuo, L. Bio-inspired bi-stable piezoelectric harvester for broadband vibration energy harvesting. *Energy Convers. Manag.* **2020**, *222*, 113174. [CrossRef]
158. Ferrari, M.; Baù, M.; Guizzetti, M.; Ferrari, V. A single-magnet nonlinear piezoelectric converter for enhanced energy harvesting from random vibrations. *Sens. Actuators A Phys.* **2011**, *172*, 287–292. [CrossRef]
159. Arrieta, A.F.; Delpero, T.; Bergamini, A.E.; Ermanni, P. Broadband vibration energy harvesting based on cantilevered piezoelectric bi-stable composites. *Appl. Phys. Lett.* **2013**, *102*, 173904. [CrossRef]
160. Cao, J.; Zhou, S.; Inman, D.J.; Lin, J. Nonlinear dynamic characteristics of variable inclination magnetically coupled piezoelectric energy harvesters. *J. Vib. Acoust.* **2015**, *137*, 021015. [CrossRef]
161. Rui, X.; Li, Y.; Liu, Y.; Zheng, X.; Zeng, Z. Experimental study and parameter optimization of a magnetic coupled piezoelectric energy harvester. *Appl. Sci.* **2018**, *8*, 2609. [CrossRef]
162. Huang, M. *Nonlinear Frequency Broadening Approaches for the Vibration-Based Energy Harvesters*; Soochow University: Suzhou, China, 2020.
163. Deng, Z.Q.; Wang, X.; Zheng, Z.; Li, C.L.; Li, H.; San, H.S. Design and experiment of wideband piezoelectric vibration energy harvester. *J. Zhejiang Univ. (Eng. Sci.)* **2017**, *51*, 2287–2291.
164. Andò, B.; Baglio, S.; Maiorca, F.; Trigona, C. Analysis of two dimensional, wide-band, bistable vibration energy harvester. *Sens. Actuators A Phys.* **2013**, *202*, 176–182. [CrossRef]
165. Fan, K.; Chang, J.; Chao, F.; Pedrycz, W. Design and development of a multipurpose piezoelectric energy harvester. *Energy Convers. Manag.* **2015**, *96*, 430–439. [CrossRef]
166. Fan, K.; Chang, J.; Pedrycz, W.; Liu, Z.; Zhu, Y. A nonlinear piezoelectric energy harvester for various mechanical motions. *Appl. Phys. Lett.* **2015**, *106*, 223902. [CrossRef]
167. Minami, Y.; Nakamachi, E. Development of enhanced piezoelectric energy harvester induced by human motion. In Proceedings of the 2012 Annual International Conference of the IEEE Engineering in Medicine and Biology Society, San Diego, CA, USA, 28 August–1 September 2012; pp. 1627–1630.
168. Radice, J.J.; Ellsworth, P.J.; Romano, M.A.; Lazarus, N.; Bedair, S.S. On the use of discontinuous nonlinear bistable dynamics to increase the responsiveness of energy harvesting devices. *Mech. Res. Commun.* **2017**, *84*, 49–54. [CrossRef]
169. Zhou, S.; Cao, J.; Inman, D.J.; Lin, J.; Liu, S.; Wang, Z. Broadband tristable energy harvester: Modeling and experiment verification. *Appl. Energy* **2014**, *133*, 33–39. [CrossRef]

170. El-Hebeary, M.M.; Arafa, M.H.; Megahed, S.M. Modeling and experimental verification of multi-modal vibration energy harvesting from plate structures. *Sens. Actuators A Phys.* **2013**, *193*, 35–47. [CrossRef]
171. Wang, C.; Zhang, Q.; Wang, W.; Feng, J. A low-frequency, wideband quad-stable energy harvester using combined nonlinearity and frequency up-conversion by cantilever-surface contact. *Mech. Syst. Signal Processing* **2018**, *112*, 305–318. [CrossRef]