energies

MDPI

Article

Analysis of the Thermal Conductivity of a Bio-Based Composite Made of Hemp Shives and a Magnesium Binder

Michał Kubiś [1], Piotr Łapka [1,*], Łukasz Cieślikiewicz [1], Genadijs Sahmenko [2], Maris Sinka [2] and Diana Bajare [2]

[1] Faculty of Power and Aeronautical Engineering, Institute of Heat Engineering, Warsaw University of Technology, Nowowiejska St. 21/25, 00-665 Warsaw, Poland; michal.kubis@pw.edu.pl (M.K.); lukasz.cieslikiewicz@pw.edu.pl (Ł.C.)

[2] Faculty of Civil Engineering, Institute of Materials and Structures, Riga Technical University, Kalku St. 1, LV-1658 Riga, Latvia; genadijs.sahmenko@rtu.lv (G.S.); maris.sinka@rtu.lv (M.S.); diana.bajare@rtu.lv (D.B.)

* Correspondence: piotr.lapka@pw.edu.pl

Abstract: The evolution of bio-based composites in the building industry is strongly linked with the growing demand for sustainable development, which is relevant nowadays. Hemp shives are a large group of organic residues that are obtained in the process of oil extraction as well as straw processing. These residues could be utilized along with a binder as constituents in the manufacture of bio-based building composites. This study is focused on the impact of density and relative humidity on the effective thermal conductivity of hemp shive-based bio-composites with a magnesium binder. For this reason, a series of samples with variable densities was manufactured and subjected to conditioning in a climatic chamber at a constant temperature and different relative humidity settings. As soon as samples were stabilized, the guarded hot plate method was applied to determine their thermal conductivities. Before each measurement, great care was taken during sample preparation to ensure minimum moisture loss during long-lasting measurements. The results showed that an increase in sample density from 200 kg/m^3 to 600 kg/m^3 corresponded to up to a three-fold higher composite thermal conductivity. In the case of sample conditioning, a change in relative humidity from a very low value to 90% also resulted in almost 60% average higher thermal conductivity.

Keywords: bio-based composite; hemp shive; sustainable building material; insulation bio-based material; material conditioning impact; guarded hot plate method

check for updates

Citation: Kubiś, M.; Łapka, P.; Cieślikiewicz, Ł.; Sahmenko, G.; Sinka, M.; Bajare, D. Analysis of the Thermal Conductivity of a Bio-Based Composite Made of Hemp Shives and a Magnesium Binder. *Energies* **2022**, *15*, 5490. https://doi.org/10.3390/en15155490

Academic Editors: Gianpiero Colangelo and Bertrand Lenoir

Received: 14 June 2022
Accepted: 27 July 2022
Published: 28 July 2022

1. Introduction

Bio-based composites have become an interesting group of materials because of the globally growing importance of sustainable development. This aspect seems relevant in the building industry as it makes up a significant global market share. Hence, more and more applications of composites that possess bio-based constituents may become an effective way to strengthen sustainability via the recycling and reusing of industrial residues. There are many works on the application of bio-based fillers as a constituent of composites in the form of fibers, husk, shives, or as a natural form, e.g., cellulose [1], sugar palm [2], bamboo [3], coconut [4], cassava starch [5], and hemp [6–10].

Recently, hemp crops have been attracting more and more attention because of the variety of their end-use products, e.g., fibers used for textile manufacturing, technical fibers, hurds used for hempcrete, or filler applications for seed-based products such as oils, which have become a successful ingredient in a vast variety of cosmetics in current times. Besides its multipurpose crop feature, hemp is regarded as a soil health booster [7] as it is a replenisizer and has been proven to showing recultivating activity in contaminated soils [7,11]. Moreover, hemp is characterized by low amount of labor needed and prosperous crops [12,13], for which cultivation is cost-effective and requires approximately 77% less financial contribution compared to cotton [8].

In the building industry, processed hemp crops can be used as a constituent of so-called hempcrete materials, i.e., a mixture of hemp shives or stem as a filler and concrete as a binder [14–16]. In most cases, hemp-based fillers reduce hempcrete composite density, thermal conductivity, and compressive strength [17] compared to solid concrete samples. Changes in these properties are related to voids in the fibrous organic fillers' structure and the composite's porous structure obtained when hemp shives are mixed with the binder. However, mixing irregular-shaped, chopped shives or stems with concrete is quite challenging due to problems with obtaining the desired insulating and mechanical properties simultaneously. On the other hand, voided hemp-based fillers are applied with success in manufacturing hemp-based porous composites where hemp shives are mixed with a binder, e.g., lime, and are shaped under pressure to form blocks [6,18]. Such composites may be utilized as non-loaded bearing walls with fine insulative properties due to their high porosity, ranging from more than 50% up to 92% [10]. Moreover, hemp–lime composites are also characterized by good moisture buffering properties and densities as low as 258 kg/m^3 [19].

The low thermal conductivity of hemp-based composites is a result of their high porosity as well as the low thermal conductivity of the constituents themselves. However, there are few studies on the influence of different factors, e.g., the composite density or moisture content, on the thermal conductivity of hemp-based building materials. For example, Kosiński et al. [10] worked on the impact of bulk density on the thermal conductivity of loose, chopped hemp shives placed in a frame holder. In that work, an increase in density of approximately 25% (up to 124 kg/m^3) resulted in an increase in thermal conductivity of the hemp stack from 0.049 W/(m·K) to 0.052 W/(m·K). The thermal conductivity of hemp–lime composites is sensitive to changes in their microstructure. Walker and Pavia [20] obtained denser samples ranging from 506 kg/m^3 to 627 kg/m^3, which were characterized by an increase in thermal conductivity from 0.117 W/(m·K) to 0.138 W/(m·K), respectively. Comprehensive research on the influence of the composition of hemp–lime composites on thermal properties has been conducted by Piątkiewicz et al. [9]. The obtained results showed thermal conductivity variation as a function of density, from minimal values of 0.062 W/(m·K) for a density of 223 kg/m^3 to 0.122 W/(m·K) for a density of 483 kg/m^3. Similar thermal conductivity variation was obtained in this paper. However, this research was conducted on samples made of different constituents.

This paper presents a systematic study and quantitative characterization of the thermal conductivity of developed bio-based composites with a magnesium binder, based on the most important parameters for the building sector, i.e., the material density and moisture content of the material. Such studies are missing in the literature. Therefore, this paper contributes to the state of the art in the field. In particular, variations in the thermal conductivity of bio-based building material samples with different densities, i.e., from 200 kg/m^3 to 600 kg/m^3, manufactured using sets of the same constituents, i.e., hemp shive fillers and magnesium binders, were investigated. Moreover, the impact of absorbed moisture on thermal conductivity was also shown for samples conditioned in relative humidities from very low values to 90%. The literature is missing a similar systematic investigation on the effect of moisture content in bio-based building materials of different densities on their thermal conductivities. In this context, the novelty of this study is fully justified. The obtained results showed that in the considered material, the water buffering effect [19] should not be neglected in its application as an insulating and construction material in the building industry.

2. Materials and Methods

In this work, a series of samples were manufactured to determine their densities and thermal conductivity, which are crucial properties of building materials. For the sake of this research, a dedicated thermal conductivity measurement procedure was developed to obtain reliable results.

2.1. Raw Materials and Manufacturing Method of Hemp Shive-Reinforced Composites

Commercially available hemp shives grown and processed in Lithuania were used as bio-based fillers and reinforcing materials. The bulk density of the shives was 80–100 kg/m^3 and the compacted bulk density was up to 115 kg/m^3. The shive particles had a distinct elongated shape and less than 60% of the particle length was in the range of 1–20 mm. The particle size distribution was determined using the standardized sieve analysis method EN 933-1:2012 [21]. The granulometric composition diagram is shown in Figure 1.

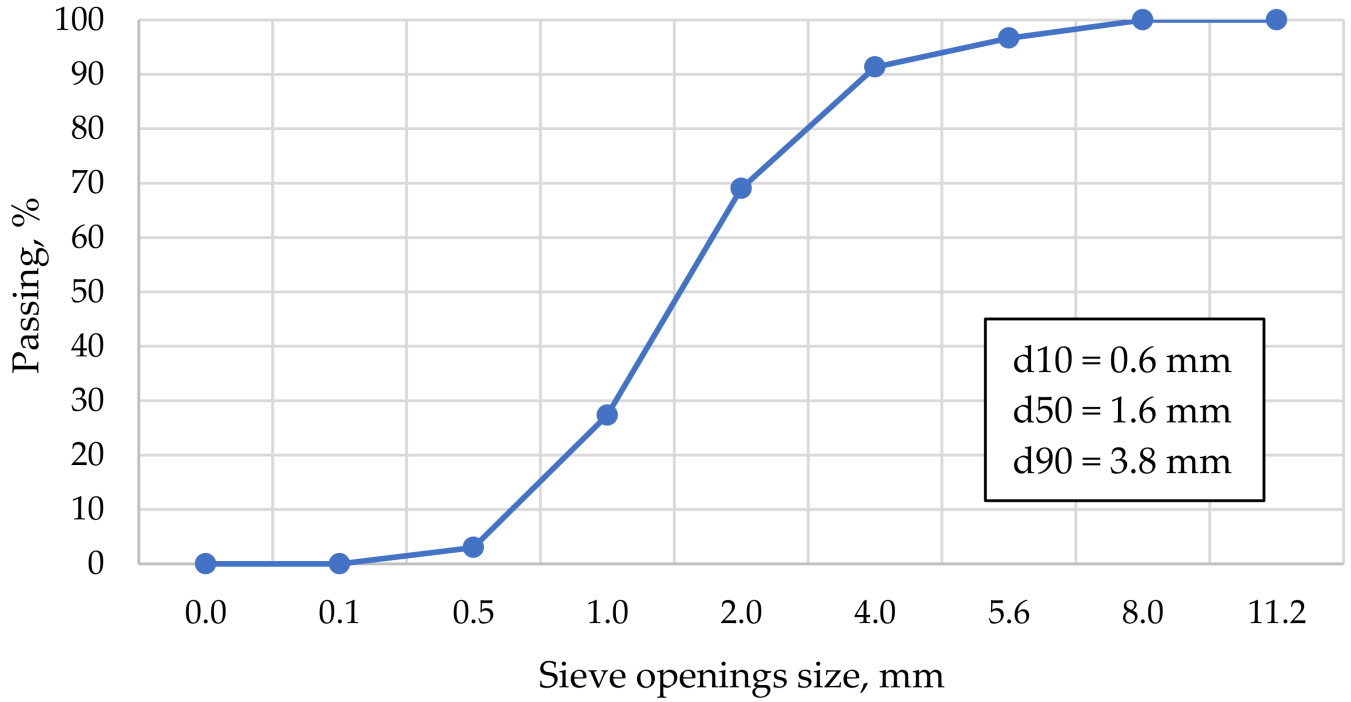

Figure 1. Shive granulometric composition.

As a binder, caustic magnesia RKMH-F was used, which came from the Austrian company RHI AG. It was industrially calcined at a temperature close to 750 °C. This magnesia contained 73% pure MgO, 4% CaO, 4 % SiO_2, 3% Fe_2O_3, and 1% Al_2O_3 and had a bulk density of 800–900 kg/m^3.

The hemp composite sample preparation was performed in the following stages: The hemp shives were preliminarily moistened at a ratio 2:1 (hemp:water by mass) during initial mixing in a laboratory pan mixer. Then, dry MgO powder was added, allowing it to stick to the wet hemp shives. Afterward, $MgCl_2$ hexahydrate solution (ratio 1:1 with water) was added and the formulation was mixed for 3 min in a laboratory pan mixer. After mixing, the mixture was filled in oiled plywood formworks and a load of 2 kN/m^2 was applied for 24 h (see Figure 2 presenting 500 mm × 500 mm × 250 mm composite plate preparation). After 24 h, the samples were demolded and cured in laboratory conditions, i.e., at a temperature of 20 ± 2 °C and a relative humidity of 50 ± 10%. Testing samples of dimensions 50 mm × 250 mm × 250 mm were sawn from the produced plates.

Figure 2. Hemp bio-composite sample (500 mm × 500 mm × 50 mm) preparation kept under pressure.

2.2. Hemp Shive-Reinforced Composites

The mixed designs of the tested samples possessed different densities, summarized in Table 1. A variety of sample densities was achieved by adjusting different proportions of MgO and $MgCl_2$.

Table 1. Hemp composite mixed designs (mass proportions) and obtained densities (P1 and P2 denote samples of the same type).

Sample Type	Hemp Shives	MgO	$MgCl_2$ Sol. 1:1 with Water	Density (kg/m^3)	Thickness, P1/P2 (m)
D200	1.00	0.50	0.32	201	0.05004/0.04951
D300	1.00	1.00	0.63	279	0.05066/0.05073
D400	1.00	1.93	1.22	394	0.04998/0.04981
D500	1.00	2.44	1.53	489	0.05145/0.05078
D600	1.00	3.00	1.89	576	0.05150/0.05090

Each composite type was represented in the measurement procedure by two samples subjected to the conditioning process followed by thermal conductivity measurements. As is shown in Figure 3, samples had a square plate shape with dimensions of approximately 250 mm × 250 mm and a thickness of approximately 50 mm. These dimensions were selected to meet the applied steady-state plate apparatus requirement. A number assigned to the sample name refers to their assumed, approximated densities compared to the actual values (Table 1)—this simplified further descriptions.

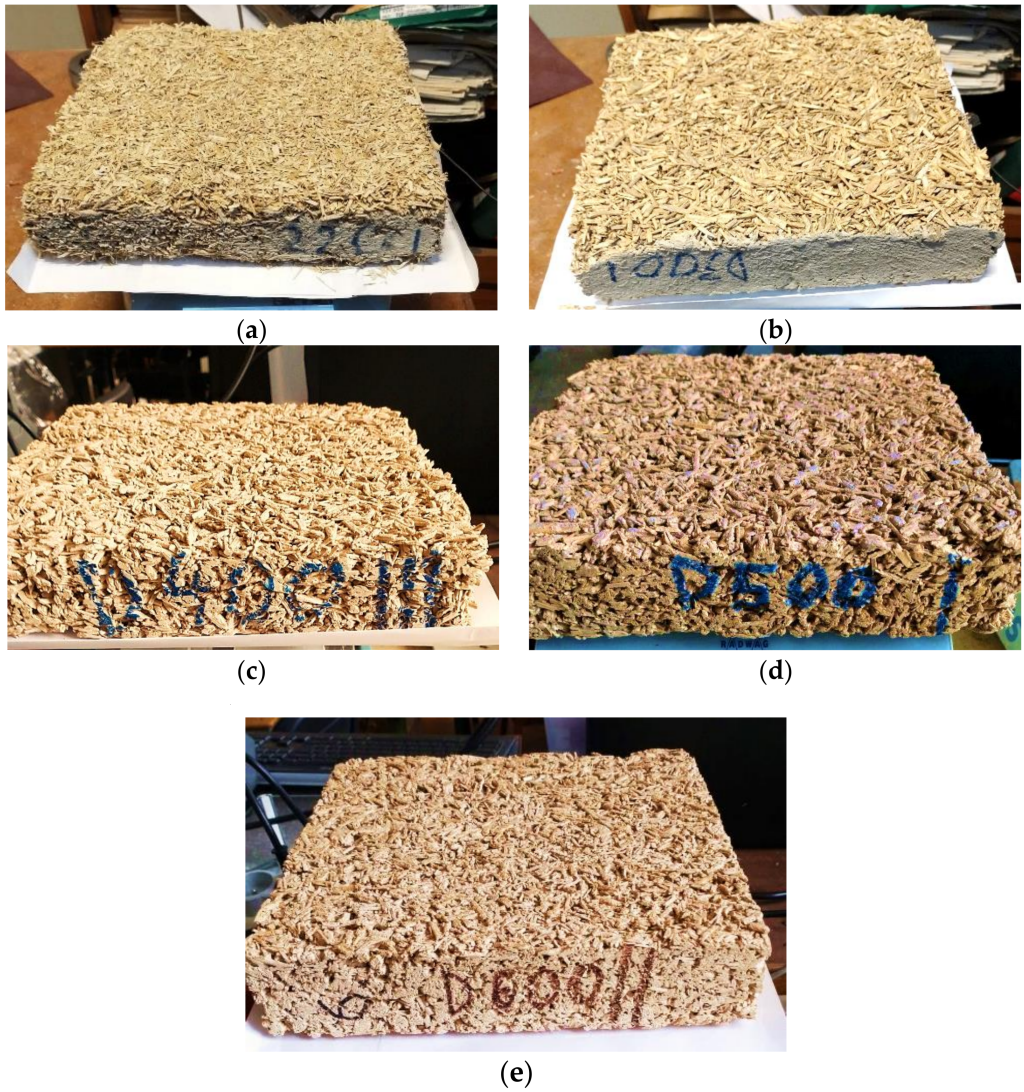

Figure 3. Pictures of exemplary samples: (**a**) D200, (**b**) D300, (**c**) D400, (**d**) D500, and (**e**) D600.

The characteristic feature of hemp shive-reinforced composites is the open-pore structure that can be seen in Figures 3 and 4.

Figure 4. Macroscopic images of samples (**a**) D200 and (**b**) D600.

The developed bio-composite composite is dedicated to sustainable buildings, i.e., passive or nearly zero-energy buildings, as it contains natural hemp fibers and a mineral

binder. The composition of this material does not include synthetic binders and hazardous substances, which is especially important in case of exposure to high temperatures. Its average compressive strength varies significantly with the density, i.e., it is equal to 0.1, 0.25, 0.61, 1.03, and 1.5 MPa for samples D200, D300, D400, D500, and D600, respectively. Therefore, composites of different densities and hence varying compressive strengths may be applied for different functions, e.g., the lower density composite may be used for insulation, while the higher density one may be used for load-bearing elements. An example of the application of this material in a three-layer wall panel is presented in [22]. Moreover, after the end of its life cycle, this material can be easily reused, e.g., to create similar composites with a higher density after appropriate processing.

2.3. Conditioning and Measurement Method

2.3.1. Sample Conditioning

A climatic Pol-Eko KKS 240 chamber was utilized to obtain different moisture content in the samples and to determine thermal conductivity as a function of the amount of absorbed water. Firstly, all samples were dried with a drier at a high temperature not exceeding 60 °C. Next, they were conditioned in a climatic chamber. During conditioning, their masses were measured. For weighing, the sample was removed from the climatic chamber for approximately 1–2 min. As soon as three readings in a row of mass measured with an analytical balance were stable and almost unchanged, thermal conductivity measurements were started. Samples were conditioned at a constant temperature and relative humidity (RH) setpoints as follows:

- Drying (drier): T = 50–60 °C and very low relative humidity.
- Conditioning (climatic chamber): T = 23 °C and RH = 50%, 75%, and 90%.

Mass measurements were performed with a frequency of two days. Once the mass of the sample did not change by more than 0.1% in the following three measurements, it was assumed that the sample achieved a steady state and thus was ready for measurement according to the standard ISO 12571 [23]. After testing all the samples, the climatic chamber was adjusted to the next relative humidity setpoint, and the weighing procedure was repeated.

2.3.2. Measurement Method for Thermal Conductivity

The thermal conductivity was measured with a guarded hot plate (GHP) apparatus [24], whose working principle is based on a steady-state heat conduction regime. The method required a larger sample so that the representative structure of the hemp shive-reinforced composites could be tested. As is shown in the sample images (Figure 4), chopped reinforcements were bonded with each other, comprising larger pores that could be seen with the naked eye. This made the GHP method a reasonable choice, because a larger sample size is required to obtain a macroscopically homogenous sample and for reliable thermal conductivity measurements.

The GHP method is based on a one-directional, steady-state heat transfer regime. The scheme of the applied apparatus is shown in Figure 5. This device had been developed so that heat generated by an electrical heater (4) is transferred to a cooler (2) through a sample (3). This heat flow path determines the direction of the measurement. A hot plate (1) is a guard for the electrical heater. This element allows the condition of one-directional heat transfer in the sample as soon as its temperature is equal to the temperature of the electrical heater to be met. The control system adjusts the power of the electrical heater to reach the temperature of the hot plate using a thermopile (7) signal. This minimizes heat losses from the electrical heater and allows for more precise heat flux determination. The power generated by the electric heater is measured. This power is discharged through the sample into the cold plate in a steady state. Therefore, the heat flux flowing through the sample is known. The hot plate and the cooler temperatures are adjustable by separated circulation baths, and they stayed set as a constant during the whole measurement. The GHP apparatus used in this paper was modified with an additional element, i.e., a copper

coil (5). This element was supplied with working fluid by a third circulation bath. In order to minimize the impact of heat transfer in perpendicular directions within the sample, the following crucial boundary condition has to be fulfilled: The average temperature of the hot plate and the cooler have to be equal to the ambient temperature, so that heat fluxes at the sidewalls of the measured sample are in balance. Therefore, the copper coil (5) was supplied with a fluid at a temperature equal to the average temperature of the hot plate and the cooler. In this way, the device's measurement capabilities were extended to higher temperature gradients than recommended in the standard [24], and surrounding temperature fluctuations were eliminated. All elements of the GHP apparatus were inside the box made of insulation (8) to minimize heat losses to the environment. An in-house software based on the algorithm developed in the LabVIEW was used to control the apparatus as well as to register the measured parameters.

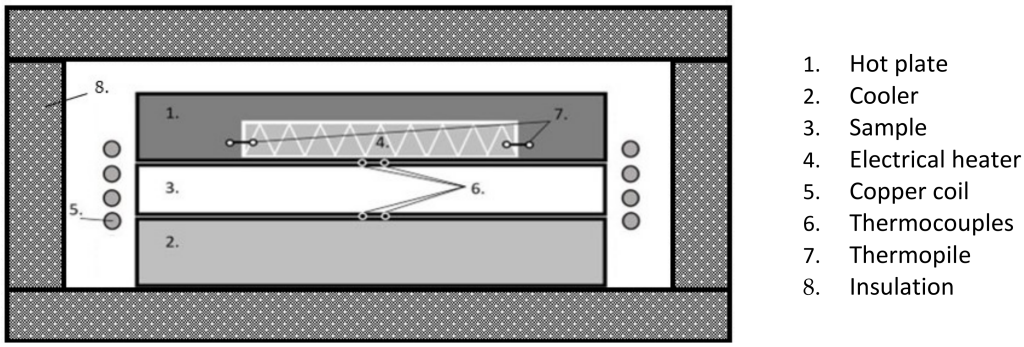

Figure 5. Scheme of a GHP apparatus stack.

The temperature difference between the top and the bottom of the sample was measured using two pairs of thermocouples (6)—one was at the top and the second at the bottom. Thermocouples were located near the centers of the sample and stuck to its surfaces with a piece of duct tape. A characteristic feature of the steady-state method is a long-lasting measurement; in this case, a steady state was achieved within 5–8 h. The temperature gradient of 20 °C between the plates was achieved by setting the temperatures of the working fluids supplied to the hot and cold plates according to the assumed ambient temperature. The ambient temperature was set to 23 °C at the third circulation bath. Therefore, the cold and hot plates were supplied with working fluids at 13 °C and 33 °C, respectively. The careful sample preparation stage preceded each measurement. The sample removed from the climatic chamber was immediately wrapped tightly in three layers of the polypropylene stretch film to minimize moisture losses during long-lasting measurements. This stretch film was chosen due to its good vapor barrier, as reported in the literature. In addition, the edges of the stretch film were rolled and sealed with duct tape, as shown in Figure 6. Moreover, sample thicknesses were measured using a caliper before drying and conditioning. In Table 1, the average thickness for two samples of each type (P1 and P2) are shown. The thickness was calculated as an average of eight measurements performed on each sample, with two measurements for each sample side.

The thermal conductivity was found based on the electric heater power, temperatures at the cold and hot sample surfaces, and sample thickness measurements using the following formula [24]:

$$k = \frac{\dot{Q}}{\delta(T_h - T_c)} \tag{1}$$

where: δ—average sample thickness, $\dot{Q}$—average electric heater power, and T_c and T_h—average temperatures at the cold and hot sample surface, respectively. In the case of sample thickness, the average was obtained from several sample thickness measurements, while in the case of power and temperature, averages were obtained from measurements in the steady state, which lasted at least one hour.

Figure 6. Samples prepared for measurement.

3. Results

Thermal conductivities were measured using two samples for each density and at four states: dried and conditioned at the following relative humidities: RH = 50%, 75%, and 90%. Table 2 shows detailed results and Figure 7 shows average values. Results of the measurements according to sample types are denoted according to the legend presented in Figure 7. The standard deviation for each sample was evaluated according to the calculation of thermal conductivity performed based on sensor readings collected during the last hour of measurement.

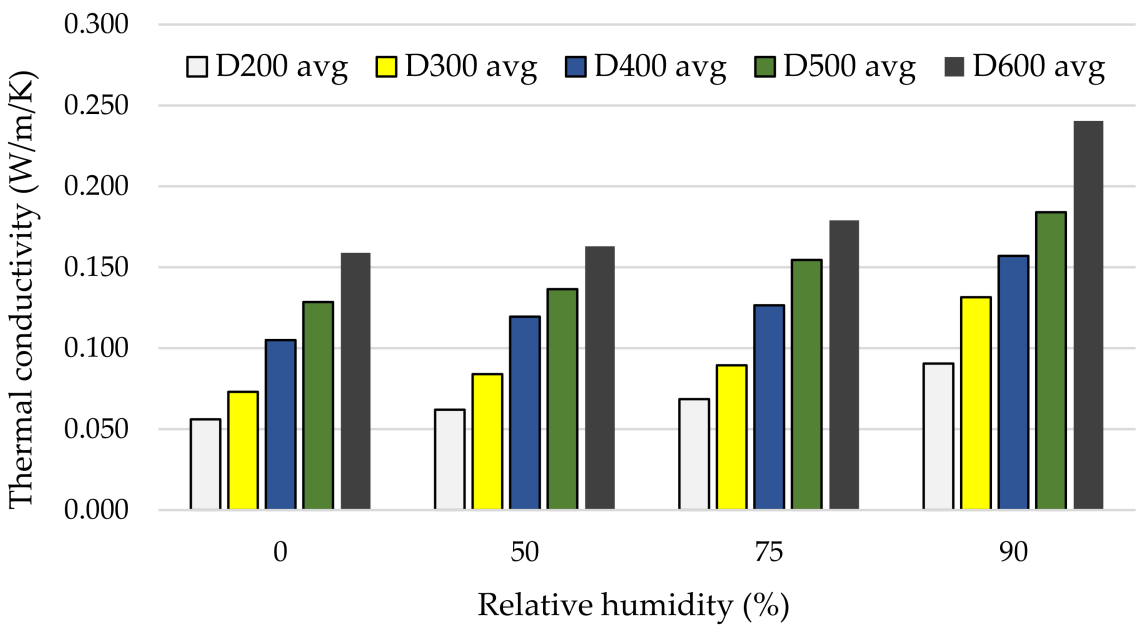

Figure 7. Average thermal conductivity of samples conditioned at different relative humidity setpoints.

Table 2. Thermal conductivity of measured samples at different relative humidities (P1 and P2 denote samples of the same type).

Sample Type	Thermal Conductivity (W/m/K)			
	Dry	RH = 50%	RH = 75%	RH = 90%
D200 P1	0.055	0.062	0.070	0.093
Std dev.	0.001	0.002	0.001	0.001
D200 P2	0.057	0.062	0.067	0.088
Std dev.	0.001	0.001	0.001	0.005
D200 avg	**0.056**	**0.062**	**0.069**	**0.091**
D300 P1	0.074	0.085	0.090	0.131
Std dev.	0.001	0.001	0.001	0.001
D300 P2	0.072	0.083	0.089	0.132
Std dev.	0.001	0.001	0.002	0.001
D300 avg	**0.073**	**0.084**	**0.090**	**0.132**
D400 P1	0.104	0.121	0.127	0.159
Std dev.	0.001	0.001	0.002	0.003
D400 P2	0.106	0.118	0.126	0.155
Std dev.	0.002	0.001	0.001	0.002
D400 avg	**0.105**	**0.120**	**0.127**	**0.157**
D500 P1	0.127	0.138	0.150	0.184
Std dev.	0.001	0.003	0.001	0.002
D500 P2	0.130	0.135	0.159	0.194
Std dev.	0.001	0.002	0.001	0.001
D500 avg	**0.129**	**0.137**	**0.155**	**0.184**
D600 P1	0.158	0.159	0.182	0.240
Std dev.	0.001	0.001	0.001	0.002
D600 P2	0.160	0.169	0.176	0.241
Std dev.	0.002	0.003	0.001	0.001
D600 avg	**0.159**	**0.163**	**0.179**	**0.241**

4. Discussion

The measurements performed on the samples at different states clearly show an impact of composite density and absorbed water on thermal conductivity. The low standard deviation values calculated for each sample pair indicate their homogenous microstructure. The largest difference in thermal conductivity between samples in a pair was approximately 6% for D600 conditioned at RH = 50% and approximately 5% for D500 conditioned at RH = 75%. The other results showed a 5% difference in thermal conductivity for samples D500 conditioned at RH = 90% and D200 conditioned at RH = 90%. The rest of the pairs showed no more than 4% variations in thermal conductivity.

Comparing average thermal conductivities between subsequent material types (i.e., D200, D300, D400, D500, and D600), an increase in the range of 22–43% was found. This increase may be analyzed by considering two increment groups: The first group is D200–D300 and D300–D400, while the second is D400–D500 and D500–D600. The increase in thermal conductivity in the first group was 30 and 43%, respectively. In the second group, these values were smaller and reached 22 and 23%, respectively. This may indicate that in the case of low-density samples, a change in manufacturing parameters/constituent ratios/amounts of mold backfill has a greater impact, unless they reach a threshold value of 400 kg/m^3. This probably indicates that the percolation threshold in the case of these series of samples was near that threshold value.

The impact of density on thermal conductivity may be shown clearly by comparing composite D200 and D600. Sample D600 possessed an approximately 2.9-fold higher measured density than sample D200 and a 2.7-fold average higher thermal conductivity—indicating a strong correlation between these properties.

The investigation also showed that thermal conductivity depends strongly on the amount of water absorbed during the conditioning phase. It is worth emphasizing that even

though the samples were not soaked but only exposed to moist air, the average increase in thermal conductivity between the dry sample and that conditioned at RH = 90% was up to 58%. Moreover, the increments in thermal conductivity became significantly higher when the relative humidity at which samples were conditioned rose—this is due to the non-linear character of the sorption curve for hemp-based composites.

5. Conclusions

This paper presents a study on the effects of density and water content on the thermal conductivity of hemp shive-based composites. A set of considered samples with variable densities was obtained by applying composite constituents at different ratios during the molding stage of the manufacturing process. Blocks of biocomposites were manufactured using hemp shive as a reinforcement and a mixture of MgO, $MgCl_2$, and water as a binder. These were preliminarily prepared and molded in an open mold. Then, a constant pressing force was applied. Measurements of density confirmed that the initial assumptions were achieved, which resulted in sample density ranging from 201 kg/m^3 to 576 kg/m^3.

The impact of absorbed water was studied based on conditioning dry samples in the climatic chamber at the following relative humidities: 50%, 75%, and 90%. Dry samples were investigated as well. The conditioning process lasted approximately 4 weeks for each setpoint until three consecutive mass measurements, performed day by day, varied by no more than 0.1%. Moreover, the thermal conductivity measurements with the steady-state GHP method allowed for the testing of only one sample per day. Therefore, this study lasted a couple of months and required appropriate planning.

Taking into account the results obtained in this paper, the following conclusions were found. An increase in sample density of approximately 2.9 times resulted in 2.7-fold average higher thermal conductivity. Similarly, thermal conductivity rose with increasing amounts of water absorbed, i.e., to 58% when the relative humidity increased from a very low value to 90%. These results indicate that when designing buildings made of bio-based materials, the influence of moisture content in the material should be considered when heat losses/gains are estimated.

Author Contributions: Conceptualization, P.Ł. and D.B.; methodology, M.K., P.Ł., Ł.C., G.S., M.S. and D.B.; software, Ł.C.; validation, Ł.C., M.S. and P.Ł.; formal analysis, M.K., M.S. and P.Ł.; investigation, M.K., M.S. and G.S.; resources, Ł.C., P.Ł. and D.B.; data curation, M.K. and P.Ł.; writing—original draft preparation, M.K., G.S., M.S. and P.Ł.; writing—review and editing, P.Ł.; visualization, M.K. and G.S.; supervision, D.B. and P.Ł.; project administration, D.B. and P.Ł.; funding acquisition, D.B. and P.Ł. All authors have read and agreed to the published version of the manuscript.

Funding: This research was funded by the National Centre for Research and Development (Poland) under M-ERA.NET 2 network grant no. M-ERA.NET2/2019/4/2020 "Manufacturing technology of building products made of ecological high performance fiber composites with encapsulated PCM for the NZEB application, HEMP4NZEB".

Institutional Review Board Statement: Not applicable.

Informed Consent Statement: Not applicable.

Data Availability Statement: Not applicable.

Acknowledgments: The work of M.K., P.Ł. and Ł.C. was supported by the Faculty of Power and Aeronautical Engineering of Warsaw University of Technology in the framework of statutory activity.

Conflicts of Interest: The authors declare no conflict of interest. The funders had no role in the design of the study; in the collection, analyses, or interpretation of data; in the writing of the manuscript, or in the decision to publish the results.

References

1. Zhang, K.; Zheng, S.; Liu, Y.; Lin, J. Isolation of hierarchical cellulose building blocks from natural flax fibers as a separation membrane barrier. *Int. J. Biol. Macromol.* **2020**, *155*, 666–673. [CrossRef] [PubMed]
2. Sari, N.P.; Olivia, M.; Djauhari, Z. The mechanical behavior of mortar cement mixing with palm sugar due to exposed to heat (high temperature). *IOP Conf. Ser. Earth Environ. Sci.* **2021**, *737*, 012039. [CrossRef]
3. Carcassi, O.B.; Minotti, P.; Habert, G.; Paoletti, I.; Claude, S.; Pittau, F. Carbon Footprint Assessment of a Novel Bio-Based Composite for Building Insulation. *Sustainability* **2022**, *14*, 1384. [CrossRef]
4. Budiman, I.; Sumarno, A.; Triastuti; Prasetyo, A.M.; Maidina; Widodo, E.; Akbar, F.; Subiyanto, B.; Nugroho, A. The properties of cement boards reinforced with coconut coir fiber (Cocos nucifera) as building materials. *IOP Conf. Ser. Earth Environ. Sci.* **2021**, *762*, 4–12. [CrossRef]
5. Bertoft Eric, E.; Laohaphatanalert, K.; Piyachomkwan, K.; Sriroth, K. The fine structure of cassava starch amylopectin. Part 2: Building block structure of clusters. *Int. J. Biol. Macromol.* **2010**, *47*, 325–335. [CrossRef] [PubMed]
6. Brzyski, P.; Gładecki, M.; Rumińska, M.; Pietrak, K.; Kubiś, M.; Łapka, P. Influence of Hemp Shives Size on Hygro-Thermal and Mechanical Properties of a Hemp-Lime Composite. *Materials* **2020**, *13*, 5383. [CrossRef]
7. Adesina, I.; Bhowmik, A.; Sharma, H.; Shahbazi, A. A Review on the Current State of Knowledge of Growing Conditions, Agronomic Soil Health Practices and Utilities of Hemp in the United States. *Agriculture* **2020**, *10*, 129. [CrossRef]
8. Duque Schumacher, A.G.; Pequito, S.; Pazour, J. Industrial hemp fiber: A sustainable and economical alternative to cotton. *J. Clean. Prod.* **2020**, *268*, 122180. [CrossRef]
9. Piatkiewicz, W.; Narloch, P.; Pietruszka, B. Influence of hemp-lime composite composition on its mechanical and physical properties. *Arch. Civ. Eng.* **2020**, *66*, 487–503. [CrossRef]
10. Kosiński, P.; Brzyski, P.; Tunkiewicz, M.; Suchorab, Z.; Wiśniewski, D.; Palczyński, P. Thermal Properties of Hemp Shives Used as Insulation Material in Construction Industry. *Energies* **2022**, *15*, 2461. [CrossRef]
11. Citterio, S.; Santagostino, A.; Fumagalli, P.; Prato, N.; Ranalli, P.; Sgorbati, S. Heavy Metal Tolerance and Accumulation of Cd, Cr and Ni by *Cannabis sativa* L. *Plant Soil* **2003**, *56*, 243–252. [CrossRef]
12. Crini, G.; Lichtfouse, E.; Chanet, G.; Morin-Crini, N. Applications of hemp in textiles, paper industry, insulation and building materials, horticulture, animal nutrition, food and beverages, nutraceuticals, cosmetics and hygiene, medicine, agrochemistry, energy production and environment: A review. *Environ. Chem. Lett.* **2020**, *18*, 1451–1476. [CrossRef]
13. Cierpucha, W.; Kozłowski, R.; Mańkowski, J.; Waśko, J.; Mańkowski, T. Applicability of flax and hemp as raw materials for production of cotton-like fibres and blended yarns in Poland. *Fibres Text. East. Eur.* **2004**, *12*, 13–18.
14. Ahmed, A.T.M.F.; Islam, M.Z.; Mahmud, M.S.; Sarker, M.E.; Islam, M.R. Hemp as a potential raw material toward a sustainable world: A review. *Heliyon* **2022**, *8*, e08753. [CrossRef] [PubMed]
15. Elfordy, S.; Lucas, F.; Tancret, F.; Scudeller, Y.; Goudet, L. Mechanical and thermal properties of lime and hemp concrete ("hempcrete") manufactured by a projection process. *Constr. Build. Mater.* **2008**, *22*, 2116–2123. [CrossRef]
16. Abdellatef, Y.; Khan, M.A.; Khan, A.; Alam, M.I.; Kavgic, M. Mechanical, Thermal, and Moisture Buffering Properties of Novel Insulating Hemp-Lime Composite Building Materials. *Materials* **2020**, *13*, 5000. [CrossRef]
17. Williams, J.; Lawrence, M.; Walker, P. The influence of constituents on the properties of the bio-aggregate composite hemp-lime. *Constr. Build. Mater.* **2018**, *159*, 9–17. [CrossRef]
18. Brzyski, P.; Gleń, P.; Gładecki, M.; Rumińska, M.; Suchorab, Z.; Łagód, G. Influence of the Direction of Mixture Compaction on the Selected Properties of a Hemp-Lime Composite. *Materials* **2021**, *14*, 4629. [CrossRef]
19. Mazhoud, B.; Collet, F.; Pretot, S.; Lanos, C. Development and hygric and thermal characterization of hemp-clay composite. *Eur. J. Environ. Civ. Eng.* **2018**, *22*, 1511–1521. [CrossRef]
20. Walker, R.; Pavía, S. Moisture transfer and thermal properties of hemp-lime concretes. *Constr. Build. Mater.* **2014**, *64*, 270–276. [CrossRef]
21. *EN 933-1*; Tests for Geometrical Properties of Aggregates—Part 1: Determination of Particle Size Distribution—Sieving Method. European Committee for Standardization: Brussels, Belgium, 2012.
22. Sahmenko, G.; Sinka, M.; Namsone, E.; Korjakins, A.; Bajare, D. Sustainable Wall Solutions Using Foam Concrete and Hemp Composites. *Environ. Clim. Technol.* **2021**, *25*, 917–930. [CrossRef]
23. *ISO 12571*; Hygrothermal Performance of Building Materials and Products—Determination of Hygroscopic Sorption Properties. International Organization for Standardization: Geneva, Switzerland, 2013.
24. *ISO 8302*; Thermal Insulation—Determination of Steady-State Thermal Resistance and Related Properties—Guarded Hot Plate Apparatus. International Organization for Standardization: Geneva, Switzerland, 1991.