energies

MDPI

Article

Maximizing Thermal Energy Recovery from Drinking Water for Cooling Purpose

Jawairia Imtiaz Ahmad [1,2,*], Sara Giorgi [3], Ljiljana Zlatanovic [1,4,5], Gang Liu [1,6] and Jan Peter van der Hoek [1,3,5]

1 Sanitary Engineering, Department of Water Management, Faculty of Civil Engineering and Geosciences, Delft University of Technology, 2600 GA Delft, The Netherlands; ljiljana.zlatanovic@pwn.nl (L.Z.); gliu@rcees.ac.cn (G.L.); J.P.vanderHoek@tudelft.nl (J.P.v.d.H.)
2 Institute of Environmental Sciences and Engineering, School of Civil and Environmental Engineering, National University of Science and Technology, H-12 Sector, Islamabad 44000, Pakistan
3 Waternet, Korte Ouderkerkerdijk 7, 1096 AC Amsterdam, The Netherlands; sara.giorgi@waternet.nl
4 Water Supply Company Noord-Holland PWN, Rijksweg 501, 1991 AS Velserbroek, The Netherlands
5 Amsterdam Institute for Advanced Metropolitan Solutions, Kattenburgerstraat 5, 1018 JA Amsterdam, The Netherlands
6 Key Laboratory of Drinking Water Science and Technology, Research Centre for Eco-Environmental Sciences, Chinese Academy of Sciences, Beijing 100085, China
* Correspondence: j.i.ahmad@tudelft.nl

Abstract: Drinking water distribution networks (DWDNs) have a huge potential for cold thermal energy recovery (TED). TED can provide cooling for buildings and spaces with high cooling requirements as an alternative for traditional cooling, reduce usage of electricity or fossil fuel, and thus TED helps reduce greenhouse gas (GHG) emissions. There is no research on the environmental assessment of TED systems, and no standards are available for the maximum temperature limit (T_{max}) after recovery of cold. During cold recovery, the water temperature increases, and water at the customer's tap may be warmer as a result. Previous research showed that increasing T_{max} up to 30 °C is safe in terms of microbiological risks. The present research was carried out to determine what raising T_{max} would entail in terms of energy savings, GHG emission reduction and water temperature dynamics during transport. For this purpose, a full-scale TED system in Amsterdam was used as a benchmark, where T_{max} is currently set at 15 °C. T_{max} was theoretically set at 20, 25 and 30 °C to calculate energy savings and CO_2 emission reduction and for water temperature modeling during transport after cold recovery. Results showed that by raising T_{max} from the current 15 °C to 20, 25 and 30 °C, the retrievable cooling energy and GHG emission reduction could be increased by 250, 425 and 600%, respectively. The drinking water temperature model predicted that within a distance of 4 km after TED, water temperature resembles that of the surrounding subsurface soil. Hence, a higher T_{max} will substantially increase the TED potential of DWDN while keeping the same comfort level at the customer's tap.

Keywords: energy transition; cold recovery; cooling; carbon footprints reduction; drinking water distribution networks; greenhouse gas emissions

check for updates

Citation: Ahmad, J.I.; Giorgi, S.; Zlatanovic, L.; Liu, G.; van der Hoek, J.P. Maximizing Thermal Energy Recovery from Drinking Water for Cooling Purpose. *Energies* **2021**, *14*, 2413. https://doi.org/10.3390/en14092413

Academic Editor: Peter Childs

Received: 25 March 2021
Accepted: 20 April 2021
Published: 23 April 2021

Publisher's Note: MDPI stays neutral with regard to jurisdictional claims in published maps and institutional affiliations.

Copyright: © 2021 by the authors. Licensee MDPI, Basel, Switzerland. This article is an open access article distributed under the terms and conditions of the Creative Commons Attribution (CC BY) license (https://creativecommons.org/licenses/by/4.0/).

1. Introduction

Resource recovery from the water cycle is gaining much attention. The focus is much on materials from wastewater, such as nutrients, carbon, energy in the form of biogas and water itself [1–3]. Resource recovery from drinking water has also been described and is applied in practice, e.g., the recovery of calcite from the pellet softening process in drinking water treatment [4]. The thermal energy from sewage water and wastewater treatment plant effluent has been pointed at as a valuable resource [5,6]. However, at the same time, it is stressed that more research is needed into environmental assessments of thermal energy recovery systems [7]. The potential of thermal energy recovery from

the water cycle, including wastewater, surface water, groundwater and drinking water, has been estimated for Amsterdam and its surroundings, focusing on the possibilities to reduce carbon emissions [8–11]. A specific thermal energy source appeared to be the cold water in the drinking water distribution network [12]. Depending on the drinking water temperature in the network, it can be used for both heating and cooling purposes.

Global warming is raising the earth's temperature [13], and therefore, the demand for cooling is growing substantially. In the European Union, the use of central and room air conditioning units for space cooling has increased by 50 times from the 90's till 2010 [14]. In Amsterdam (the Netherlands), the energy required for space cooling of non-residential spaces amounts to 2162 TJ/y [15,16]. Providing this energy with traditional cooling methods (i.e., mechanical cooling or cooling towers) requires a huge amount of electricity and water and results in a high carbon footprint [17–19]. Hence, there is a need to explore more sustainable cooling resources. Drinking water distribution networks (DWDNs) contain much thermal energy in the form of cold. For example, in Amsterdam, where drinking water is produced from surface water, the temperature within the DWDN is between 4–10 °C in winter and between 15–20 °C in summer [20]. These temperatures offer possibilities to recover thermal energy for cooling by heat exchange during wintertime: drinking water exchanges its cold temperature with a warm carrier medium (e.g., air, water, glycol, etc.) inside a heat exchanger, and the slightly heated water flows back into the DWDN [20–22]. This cold temperature recovery from DWDNs, mostly available during winter time with low drinking water temperatures, is scarcely available during times of high cooling demand (i.e., during summer with high drinking water temperatures). An option to overcome this hurdle is to recover and store the low temperature in aquifer thermal energy storage (ATES) systems for later use in summer. During winter the recovered thermal energy can also be utilized directly without intermediate storage as free available cooling (Figure 1).

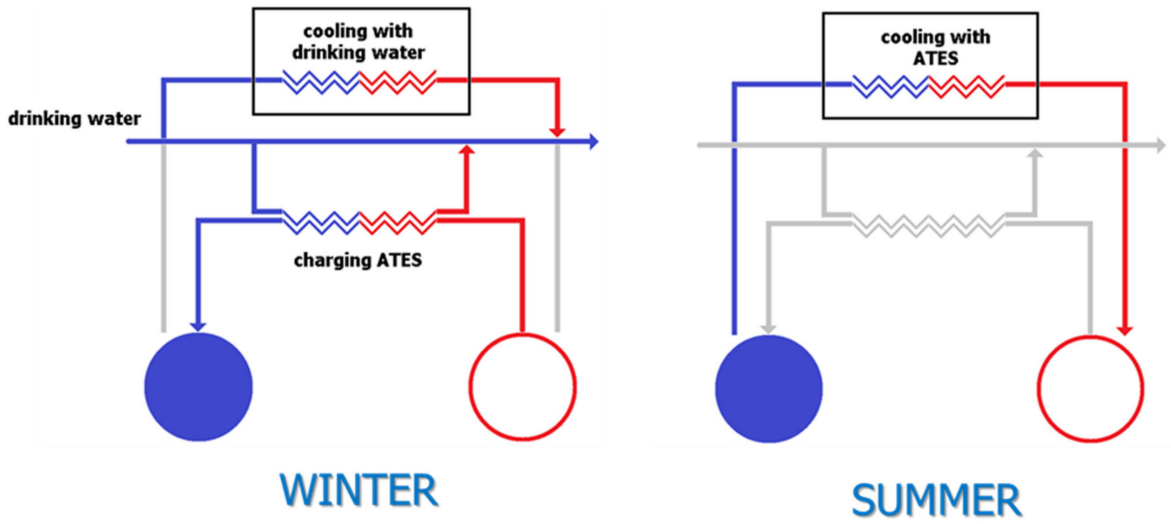

Figure 1. Cold drinking water in wintertime (**left**) is directly utilized in winter periods for places with extensive cooling requirements or is used for charging an aquifer thermal energy storage system (ATES) to provide space cooling in upcoming summer periods (**right**).

However, retrieving cold from DWDNs means increasing the temperature of the drinking water during the energy exchange, which means elevated temperatures in the DWDN. After the use of the drinking water by the customers, the drinking water turns into wastewater. Due to the higher temperature of the drinking water after cold recovery, cold recovery does not compete with thermal energy (heat) recovery from wastewater [5,11]. The higher the temperature of the drinking water that can be allowed after cold recovery (T_{max}), the higher the temperature difference between the incoming drinking water and drinking water leaving the heat exchanger, and the longer the period in the year the heat

exchange can be applied. For example, a T_{max} of 18 °C means that when the incoming water temperature exceeds 18 °C, during that time, the cold recovery cannot be applied. Hence, a high T_{max} is attractive as it increases the energy recovery potential and carbon footprint reduction potential of the system. The T_{max} is determined by the effects an elevated drinking water temperature may have on the microbiological water quality and the standard for the drinking water temperature at the customer's tap.

Concerning an elevated temperature, this may enhance microbial activity and proliferation of temperature-sensitive opportunistic pathogens like *Legionella* spp. [23]. This may occur both in the water and biofilm phase (the layer of microbes attached to the inside of the pipes), with possible negative effects on water quality. Our previous pilot scale studies revealed that, with a drinking water temperature of 25 °C and 30 °C after cold recovery, no negative effects were observed in the water phase in terms of water quality parameters (like microbial activity: total biomass and cell counts) and proliferation of opportunistic pathogens (*Legionella* spp.) [24]. However, the elevated drinking water temperatures, due to cold recovery, did enhance the initial biofilm growth (in terms of biomass) in the first 2–3 months of operation, compared to the biofilm growth in a reference system, in which no cold recovery was applied. Later (after 3–4 months), when the biofilm reached its steady growth phase, comparable biomass was observed in the systems with cold recovery and the reference system. Within the initial three months of applying cold recovery at the pilot plant scale, drinking water quality parameters (biomass activity and cell concentration) increased after cold recovery compared to the reference system but stayed within the standards of the Dutch drinking water regulation [24].

The concept of cold recovery from drinking water has been of interest to water utilities for the last years. The recovery of cold from DWDNs or from drinking water reservoirs for use in district cooling has been investigated and simulated for potential use in different countries applying chlorinated DWDNs, such as in Italy [25], France [26] and the United Kingdom [27]. However, the cold recovery from drinking water is not yet conceptualized in any of these places because of different reasons. Especially maintaining the drinking water quality after cold recovery was one of the primary concerns. The chlorinated distribution systems are not thoroughly investigated regarding the microbial water quality changes after cold recovery, except one pilot scale study, which observed that the decay of chlorine was not effected by the temperature increase of up to 25 °C, and this higher temperature also had no effect on microbial water quality parameters, such as total cell count and ATP [28]. For full-scale TED application, microbial water quality investigations on chlorinated DWDSs are required.

The feed drinking water that was used at pilot scale in this study and in full-scale studies in the Netherlands for cold recovery, as well as its effect on microbiological water quality, originated from non-chlorinated distribution systems and was of very high quality. Opportunistic pathogens (*Legionella* spp.) were not present in the source drinking water, and the water was microbiologically stable (AOC $\leq$ 2 µg-C/L). These non-chlorinated drinking water distribution systems have their distinctive micro-environments, where the biological stability of drinking water is maintained by limiting nutrient concentrations [29–33]. Regarding the temperature-sensitive opportunistic pathogens, under the conditions applied (T_{max} of 25 °C and 30 °C) and the non-chlorinated feed water used, cold recovery does not pose a health risk.

The T_{max} after cold recovery also depends on the allowed temperature of the drinking water at the customer's tap in the Netherlands, which is currently 25 °C [34]. However, it is known that the drinking water temperature during transport will balance towards the soil temperature, which is mostly below 25 °C [35], so a T_{max} above 25 °C after cold recovery may be possible without breaching the standard of drinking water temperature at the tap. This means that when the water temperature is being raised for cold recovery purposes, a limit should be set to stay within the temperature threshold of 25 °C at the end users' tap.

More research is required regarding environmental assessment of thermal energy recovery systems, and especially regarding cold recovery from DWDNs and the links

between its potential energy, maximum temperature limit and temperature at customers' tap after recovering cold. Hence, the objectives of the current study were (1) to determine the maximum time period within the year to recover cold, related to the drinking water temperature limit after cold recovery (T_{max}) and the temperature of incoming drinking water; (2) to evaluate the amount of potential thermal energy and the subsequent carbon footprint savings by recovering cold from drinking water distribution systems; and (3) to determine the effect of balancing of the drinking water temperature with the soil temperature during transport of the drinking water after cold recovery.

2. Methodology

For this study, the operational parameters, such as inlet feed water temperature, flow rate, outgoing water temperature after cold recovery, soil temperature and pipe material, of a full-scale cold recovery (TED) plant of Sanquin-Waternet in Amsterdam were used [15]. Based on the results of the previous pilot scale studies [12,24], where no negative effects of cold recovery were observed on the microbial drinking water quality with exit temperatures (after leaving the heat exchanger) up to 30 °C, four values of T_{max} were chosen for this study, 15, 20, 25 and 30 °C, respectively (defined as a threshold for cold recovery). The value of 15 °C is the one currently allowed in the full-scale operational system.

This was done to (1) determine the time span of the year over, which thermal energy in the form of cold can be retrieved (Section 2.1), (2) calculate the total amount of retrievable energy (Section 2.2) and (3) predict the drinking water temperature of water flowing through the mains after cold recovery (Section 2.3). The description of the full-scale system is provided in the Supplementary Materials.

2.1. Cold Recovery Time Period

The incoming feed water temperature ($T_{feed\ water}$), together with the acceptable drinking water temperature after cold recovery (T_{max}), was used to determine the time period of the year over which cold can be retrieved. The daily $T_{feed\ water}$ data were collected for the period of January 2018 to December 2019 from the temperature sensors located at the inlet of the Sanquin-Waternet TED unit. The T_{max} values were set at 15, 20, 25 and 30 °C. The viable time period was that in which $T_{feed\ water}$ was at least 1 °C lower than T_{max}.

2.2. Cold Recovery and Carbon Footprint Reduction Potential

Cold recovery potential depends on the available drinking water flow ($F_{feed\ water}$) and the temperature difference (ΔT) between incoming drinking water ($T_{feed\ water}$) and drinking water after the TED installation (T_{max}). The maximum theoretical potential is thus directly related to the T_{max}. The formulas used to calculate the maximum energy were the following:

Formula for the cooling power (kW)

$$P(cooling) = Q \cdot c_p \cdot \Delta T \quad (1)$$

Formula for the retrieved energy

$$E = P \cdot \Delta t \quad (2)$$

where:

P: cooling power (kW);
Q: massflow rate of drinking water going through the heat exchanger (kg/s);
c_p: heat capacity of water (kJ/kg/K);
ΔT: temperature difference between water before and after the heat exchanger (K);
E: energy recovered during a certain period Δt (kWh);
Δt: period in which the energy is recovered (h).

The potential greenhouse gas (GHG) emission reduction from TED was calculated based on the difference between the electricity usage of a TED installation and that of other

cooling methods (Table 1), multiplied by the GHG factor for the Dutch electricity mix, which is equivalent to 0.475 kg CO_2/kWh [36]. For this study, other carbon emissions like CO_2 intensive flows (for instance, from chemical substances used in cooling towers) or the CO_2 of the materials comprised in the installations were not considered.

$$CO_2\ savings = \left(\frac{1}{COP_{ref}} - \frac{1}{COP_{TED}}\right) \cdot GHG_{el} \cdot \frac{1}{0.0036} \quad (3)$$

where:

CO_2 *savings*: GHG potential reduction of TED system (kg CO_2/GJ cooling);
COP_{ref}: coefficient of performance of the reference cooling method (GJ cooling/GJ electricity);
COP_{TED}: coefficient of performance of TED (GJ cooling/GJ electricity);
GHG_{el}: CO_2 emission factor of electricity (kg CO_2/kWh electricity);
1/0.0036: conversion factor between kWh and GJ.

Table 1. Seasonal COP for different cooling methods [37].

Cooling Method	Coefficient of Performance (COP)
Cooling tower	80
Dry cooler	20
Hybrid cooler	35
Chiller	7
TED	100

2.3. Temperature Model

To determine the distance at which the temperature reaches soil temperature, the temperature change after the cold recovery unit was predicted using a temperature model [35]. The network configuration of the Sanquin full-scale system was used to build a hydraulic model (Figure 2) in EPANET 2.0, which is a free software package for water distribution network modeling [38]. In the Sanquin system, a portion of the drinking water coming from a 700 mm transport main is being bypassed through a 250 mm pipe towards the heat exchanger unit (HE). After cold recovery, water is being conveyed through a 250 mm pipe to the mixing point (point 4 in Figure 2), at which two water streams, one coming from the HE and the other one from the transport main, of different temperatures are mixed. Mixed water is being further transported to a water demand reservoir, which is located ~3850 m downstream of the mixing point (Figure S1 Supplementary Materials). Drinking water temperatures were measured using sensors, which were placed: before the bypass, after the heat exchange process, at the mixing point and before the demand point (point 12 in Figure 2).

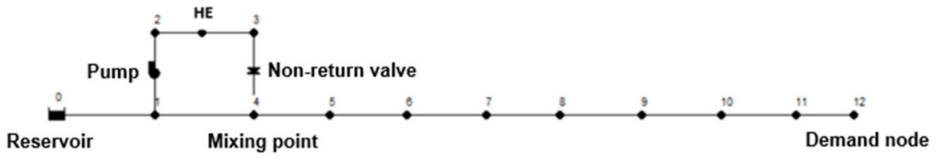

Figure 2. Sanquin full-scale model in EPANET. 0—inlet point/reservoir, 1—4 bypass to the Heat exchanger, HE—heat exchanger, 4—mixing point, 5–11 fictitious points, the mixing point (4), and demand node (12) used to assign measured diurnal flow. The distance between the fictitious points is 500 m, except for the distance between fictitious points 11 and 12, which is 350 m.

Hydraulics within the full-scale Sanquin system was simulated by EPANET 2.0, while an extension to EPANET, multispecies extension, was employed to implement the temperature model equations (Equation (4)).

$$\frac{dT_{water}}{dt} = \frac{2k}{p_{water}\, rCp, water}\ (Touter\ wall - Twater) \quad (4)$$

where T_{water} represents the bulk water temperature (K), $T_{outer\ wall}$ stands for the temperature of the outer wall of the pipe (K), which is assumed to be equal to the temperature of the surrounding soil, r is the pipe radius, $C_{p,water}$ is the heat capacity of water and k is the overall heat transfer coefficient (W/m^2 K). The calculation of the overall heat transfer coefficient is further explained in the study of Blokker et al. (2013) [35].

Because the HE unit at the Sanquin plant was operational only during winter days, temperature dynamics in the system were modeled using input parameters for a random winter day. Apart from the T_{max} values (15, 20, 25 and 30 °C), also a reference case ($T_{reference}$) was modeled. This is the water transport main of 700 mm without any HE unit or bypass and transporting water towards the same reservoir at ~3850 m downstream the Sanquin location. On the day that was used for the modeling purposes, $T_{reference}$ was measured to be 11.5 °C. Water flow in the 700 mm main varied between 840 and 940 m^3/h, and the flow in the bypass was between 310 and 315 m^3/h. A summary of additional input parameters can be found in the Supplementary Materials (Table S1 Supplementary Materials).

3. Results

3.1. Operational Period of TED

The daily temperature of the feed water ($T_{feed\ water}$) in the years 2018–2019 is shown in Figure 3a. The average daily feed water temperature in the months of January–April was 8 ± 2 °C, in May–August and September–October the temperature remained between 16 ± 2 °C and 12 ± 2 °C, respectively, for both years. Overall, the temperature in the period January–August in the year 2019 was 1 °C higher compared to the year 2018. The average ΔT that can be achieved in specific periods in the year while recovering cold is summarized in Table 2. It ranged from 1.8 and 2.1 °C with a T_{max} of 15 °C in the period May–Aug in 2018 and 2019, to 21.2 and 20.4 °C with a T_{max} of 30 °C in the period January–April in 2018 and 2019.

Further, in Figure 3b, the possible number of days in a year are shown for recovering the cold from drinking water (TED). The results show that with higher $T_{max,}$ the cold recovery period is longer. Compared to 143–193 days of cold recovery for T_{max} of 15 °C, the cold can be recovered throughout the year (354–365 days) with up to 5–15 °C temperature increase when the T_{max} is set at 20, 25 or 30 °C.

Table 2. Average seasonal feed water temperature measured over the period of two years and relevant ΔT based on maximum theoretical temperature (T_{max}) of 15, 20, 25 and 30 °C after the heat exchanger.

Year	Months	Average $T_{feed\ water}$ (°C) ± S.D	T_{max} 15 °C	T_{max} 20 °C	T_{max} 25 °C	T_{max} 30 °C
			ΔT (°C) ± S.D	ΔT (°C) ± S.D	ΔT (°C) ± S.D	ΔT (°C) ± S.D
2018	Jan–Apr	8.8 ± 2.2	6.4 ± 2.1	11.1 ± 2.3	16.1 ± 2.3	21.2 ± 2.3
	May–Aug	16.6 ± 1.49	1.8 ± 1.1	3.4 ± 1.5	8.3 ± 1.5	13.3 ± 1.5
	Sep–Dec	12.5 ± 2.8	4.5 ± 2.1	7.4 ± 2.8	12.4 ± 2.8	17.4 ± 2.8
2019	Jan–Apr	9.6 ± 1.8	5.4 ± 1.8	10.4 ± 1.8	15.4 ± 1.8	20.4 ± 1.8
	May–Aug	16.5 ± 2.3	2.1 ± 0.7	3.8 ± 2.1	8.5 ± 2.2	13.5 ± 2.2
	Sep–Dec	12.5 ± 2.9	4.3 ± 1.7	7.5 ± 2.9	12.5 ± 2.9	17.5 ± 2.9

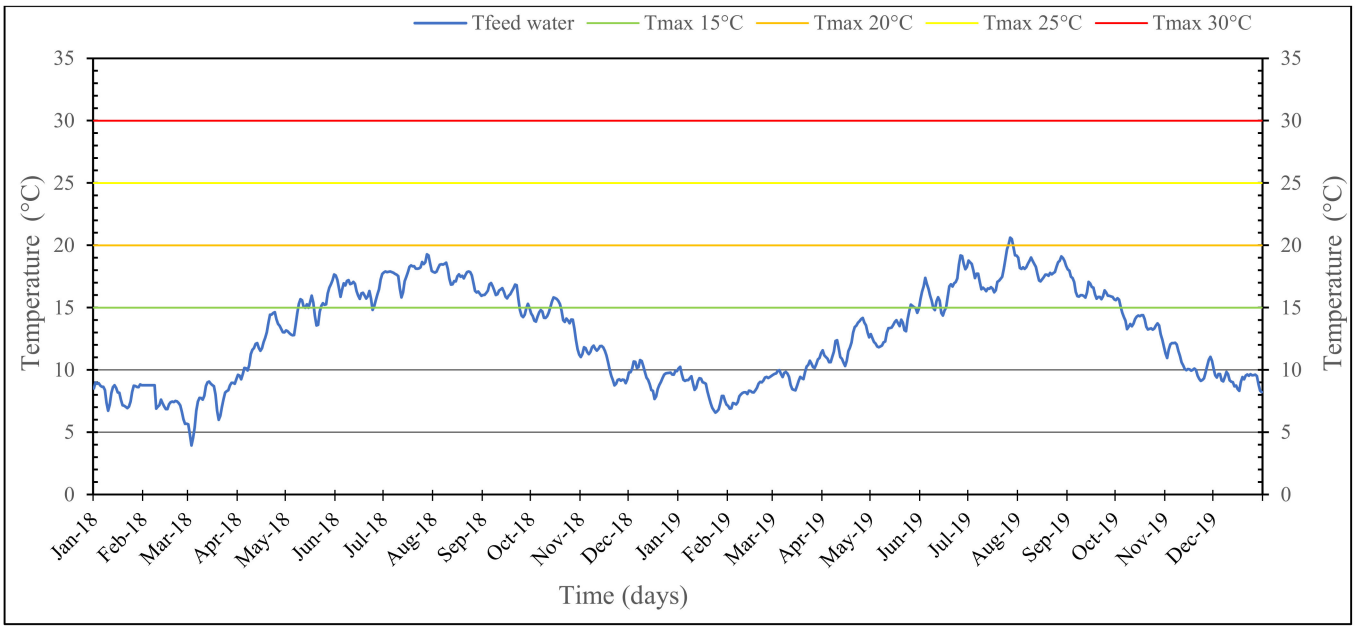

(**a**)

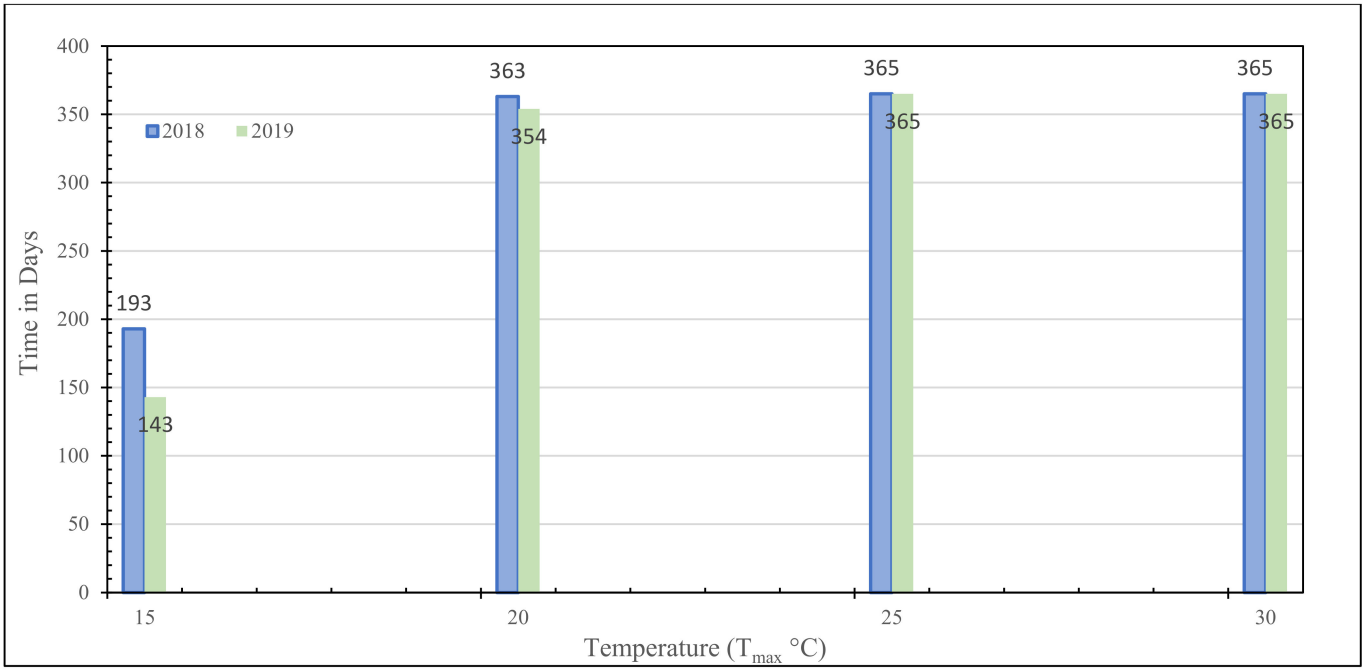

(**b**)

Figure 3. (**a**) Daily temperature over the period of two years (2018–2019) and (**b**) potential cold recovery time period (total days in a year) based on maximum temperature (T_{max}) of 15, 20, 25 and 30 °C after the heat exchanger.

3.2. Theoretical Energy Potential of TED

The retrievable energy from the drinking water can be increased by raising the maximum allowed temperature after cold recovery and the flow rate through the heat exchanger. The thermal energy for cooling that can be recovered is presented in Figure 4. This is calculated based on the feed water temperatures in the years 2018 and 2019 and the T_{max} of 15, 20, 25 and 30 °C, which determines the operational period of the heat exchange process. The maximum energy that can be retrieved from the drinking water with flow rates between 150 and 1000 m^3/h ranges from 14 to 630 TJ/year, depending on the T_{max}

after cold recovery. By raising the T_{max} from 15 to 20, 25 and 30 °C, the recovered energy for cooling can be increased by 250, 425 and 600%, respectively (Figure 4). For this theoretical cooling recovery potential to be applicable, it is required that enough cooling demand is available at such temperature levels.

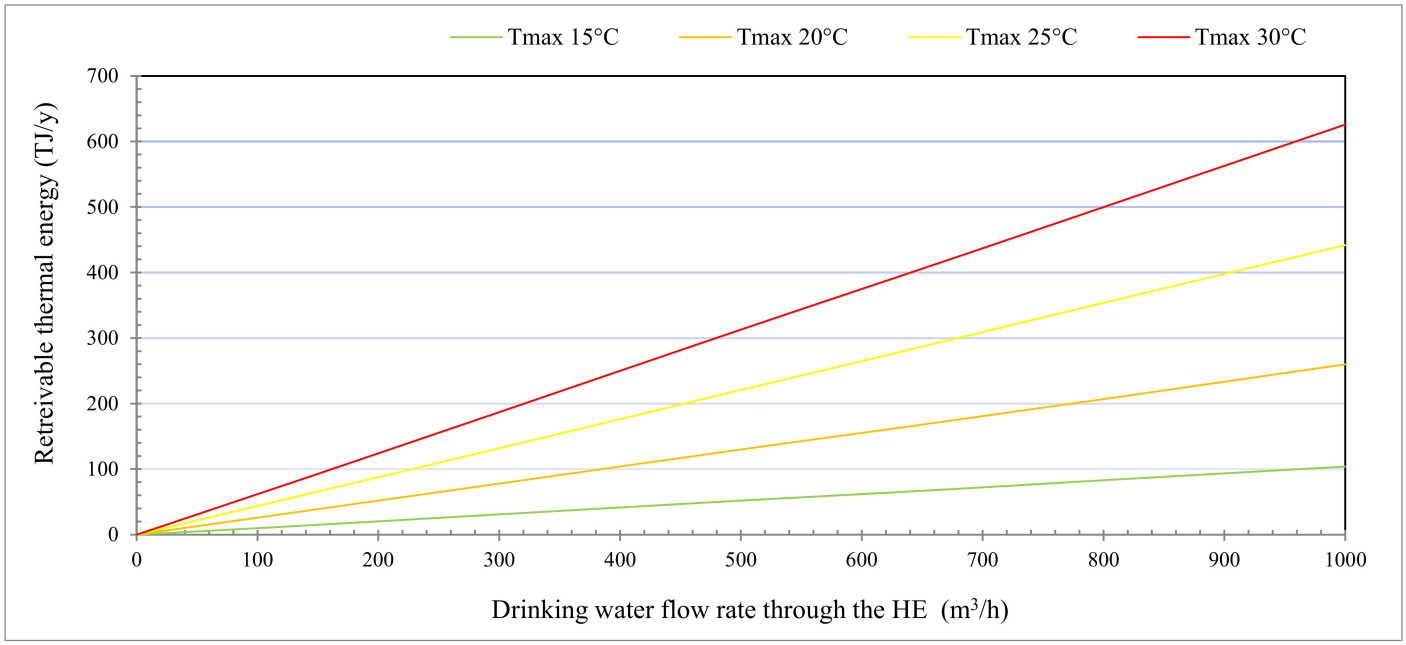

Figure 4. Cold recovery potential from drinking water as a function of the drinking water temperature after cold recovery (T_{max}) and the drinking water flow rate through the heat exchanger (m^3/h).

This energy recovery from TED, for cooling purposes, will result in the reduction of greenhouse gas (GHG) emissions by avoiding the CO_2 emissions when using traditional cooling processes. Table 3 shows the results of the GHG emission calculations in CO_2-equivalents. Since the latter is based on electricity consumption only, the CO_2 savings are linearly related to the difference in COP of the different cooling methods. Further, Table 4 shows the same results for a full-scale installation (our case study Sanquin) at an operating flow through the heat exchanger of 250 m^3/h and for T_{max} of 15, 20, 25 and 30 °C. These results show that if the Sanquin system becomes operational throughout the year by gaining the T_{max} of 25 to 30 °C, it can save more than 600% CO_2 emissions compared to its current capacity of savings at a T_{max} of 15 °C, 473 ton CO_2/y.

Table 3. CO_2 emission of different cooling methods and relative CO_2 savings of the TED system compared to each method.

Cooling Method	COP	CO_2 Emission (kg CO_2/GJ)	CO_2 Savings of TED in Comparison (kg CO_2/GJ)	CO_2 Savings of TED in Comparison (%)
Cooling tower	80	1.6	0.3	20%
Dry cooler	20	6.6	5.3	80%
Hybrid cooler	35	3.8	2.5	65%
Chiller	7	18.8	17.5	93%
TED	100	1.3	-	-

Table 4. Potential CO_2 reduction of a full-scale (250 m^3/h) TED system compared to the other traditional cooling methods.

TED System		Savings CO_2 Emission Compared to Alternative Cooling Method (ton CO_2/y)			
T_{max} (°C)	Energy Recovered (TJ/y)	Cooling Tower	Dry Cooler	Hybrid Cooler	Chiller
15	27	9	143	66	473
20	56	18	296	137	982
25	113	37	596	277	1981
30	157	52	829	385	2752

3.3. Effect of Cooling Down Drinking Water during Transport after TED

Based on the flow of the incoming feed water and water flow through the bypass, inlet feed water temperature, pipe material and soil temperature (Table S1 Supplementary Materials) from the Sanquin full-scale system, the drinking water temperature after cold recovery in the water main was modeled (Figure 5).

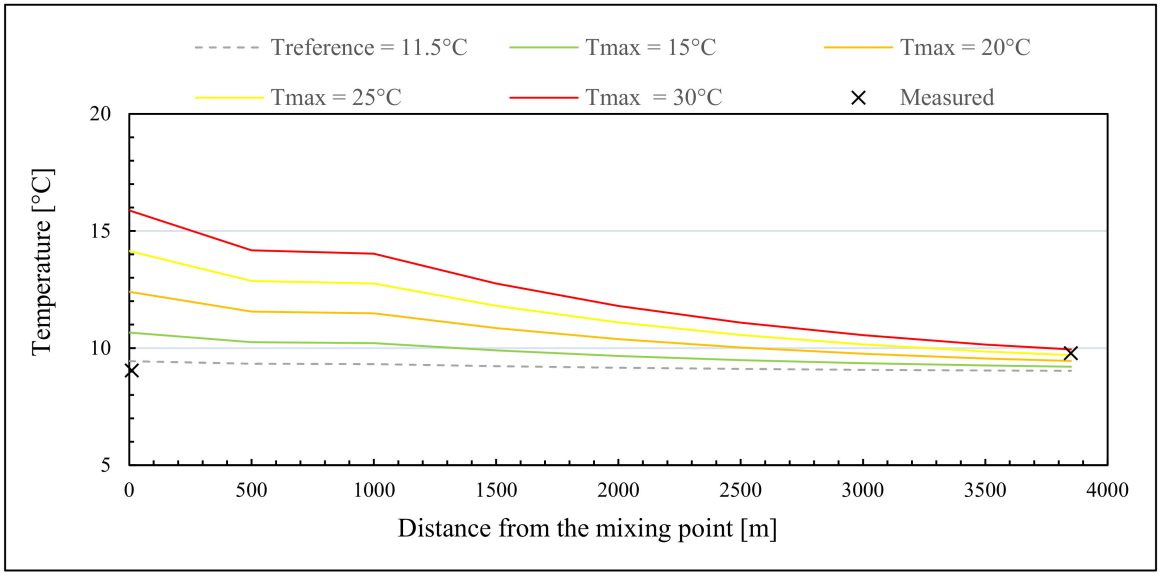

Figure 5. Measured drinking water temperature at the mixing point 4 (Figure 2) and at point 12 (Figure 2), and modeled temperature during transport from mixing point to reservoir entrance.

Figure 5 presents the temperature profile starting from the point where the water, after having passed the heat exchanger in the bypass, is mixed with the cold feed water that is coming from the main transport line, as shown in Figure 2 and in Figure S1 (Supplementary Materials).

The model prediction showed that the water temperature at the mixing point decreased with 2, 4.3, 7.6, 10.9 and 14.1 °C at a T_{max} after the HE of 15, 20, 25 and 30 °C, respectively (Figure 5). The temperature at the mixing point was 1.3, 3.0, 4.7 and 6.4 °C above the reference temperature (measured) at the mixing point for T_{max} of 15, 20, 25 and 30 °C, respectively. After a travel distance of 3850 m (to the inlet of the reservoir), the water temperature further decreased by 0.4, 1.5, 3, 4.5 and 6 °C for T_{max} of 15, 20, 25 and 30 °C, respectively. Despite the differences in T_{max}, it can be observed that after 3850 m distance, the drinking water temperature in the main approaches the reference temperature, close to the assumed soil temperature of 9 °C.

4. Discussion

4.1. Potential Energy and Cooling Down of Drinking Water after Cold Recovery

The cold recovery from drinking water distribution networks (DWDNs) has not been studied broadly in terms of the total amount of available energy and temperature of the drinking water within distribution networks after recovering cold. At the moment, there is only one full-scale system (Sanquin in Amsterdam), where cold is recovered from a DWDN by setting the T_{max} at 15 °C [15] and the retrieved energy equals 30.000 GJ/year [37]. This study revealed that by increasing the T_{max} from 15 to 20, 25 and 30 °C, the time span in which cold can be recovered would be longer (Figure 3b), and the retrievable energy at any given moment would be higher due to a higher ΔT (Figure 4). Moreover, a longer recovery period could mean that, for a given continuous cooling demand throughout the year, more recovered thermal energy can be used for cooling directly, allowing for a smaller ATES system.

In addition, the climate change predictions, including more extreme weather conditions (higher temperatures in summer, leading to increase in surface water and soil temperatures and thus higher drinking water temperatures) in upcoming years [13], point at the fact that limiting the T_{max} to 15 °C will not be sustainable both in terms of energy recovery and economics. In addition, the drinking water temperature within the transport mains is affected by the temperature of the subsurface soil, which in turn is influenced by increasing air temperatures [39,40]. With an increasing drinking water temperature, maintaining the T_{max} at 15 °C will reduce the amount of retrievable energy. This increase in temperature stresses the need to set the maximum temperature limit for TED systems higher than 15 °C.

On the other hand, the T_{max} is limited by the effects on the microbiological quality of drinking water and the standard for the drinking water temperature at the customer's tap (25 °C). The former has been already described, and temperatures up to 30 °C have shown no negative impact [12,24]. However, this is specifically the case for non-chlorinated DWDSs with microbiologically stable water and the absence of temperature-sensitive opportunistic pathogens, such as *Legionella* spp. in the drinking water before cold recovery. With respect to the temperature at the customer's tap, the temperature model (Figure 5) predicted that within a distance of 3.8 km, the temperature of the drinking water after T_{max} of 15, 20, 25 and 30 °C resembles the temperature of the surrounding sub-surface soil. Apart from this, various other factors may affect the drinking water temperature in the mains, like heat waves in summer periods, the presence of ATES systems in the subsurface (for district heating/cooling) within the vicinity of the water mains and lastly, the depth of the water mains within the soil (in the Netherlands water pipes are located 1–1.5 m beneath the surface) [39]. It is also important to point out that, for simplification purposes, the burial depth of pipes was assumed to be 1 m beneath the ground surface. Moreover, the soil temperature around the pipes was assumed to be constant throughout the day, and no influence of soil moisture on thermal soil properties was considered. As reported by Blokker et al. (2013) [35], these assumptions may cause a deviation of up to 2 °C between predicted and measured temperatures. Given that one of our objectives was to determine the distance at which the temperature reaches soil temperature after increasing the T_{max} to 20, 25 and 30 °C, the deviation between predicted and measured temperatures of 0.4–0.6 °C is considered to be insignificant.

Furthermore, by increasing the T_{max} to 20, 25 and 30 °C, higher ΔT and longer periods for energy recovery can be achieved, which results in more cooling capacity on one hand, and a smaller ATES to overcome the period in which T_{max} would be exceeded, and no energy can be recovered, on the other. However, still, it is important to do a case-to-case based extensive environmental and economic assessment before choosing the location of TED systems, to avoid breach of microbial water safety and exceeding the temperature standard at taps (as some transport distance is needed to balance the drinking water temperature with the soil temperature), as well as to match the locations of cold availability

and cooling requirements, to make these systems more sustainable and financially viable on the long run.

4.2. TED as an Innovative and Sustainable Cooling Source

Thermal energy recovered from drinking water for cooling can be used to provide either free cooling (i.e., without using chillers to upgrade the quality of the cooling) or if drinking water is not cold enough to provide the full load and quality of cooling needed, can be used as a pre coolant (for instance, in series with a compression cooling machine) or act as a condensing fluid in chillers to produce higher quality cold with a better chiller COP (coefficient of performance) [25]. The latter will both reduce the energy use of the chiller and requires a smaller electricity connection, which can in some cases be a limiting factor.

Based on the considered drinking water temperature profiles in Amsterdam (for the years 2018–2019), cooling can be recovered from drinking water (TED) throughout the year by setting the $T_{max} \geq 20$ °C (Figure 3b).

Free cooling from drinking water is a relatively energy-efficient cooling method. Electricity is only required for the pump, which extracts the water from the drinking water mains and pumps it to the heat exchanger. The required electrical power will, therefore, depend on the size and shape of the heat exchanger (proportionally with the pressure drop), together with the efficiency of the pump. The achieved cooling power will be, for a heat exchanger of a given shape and running flow rates, proportional to the average temperature difference between hot and cold fluid (LMTD, Logarithmic Medium-Temperature Difference), and therefore, to the efficiency of the heat exchanger. While the exact COP of such systems will thus be dependent on specific conditions, in the examined full-scale installation at Sanquin, it was assessed that such COPs range between 40 and 100 [37].

In any case, the TED system can be installed to (partly) replace less sustainable cooling methods; these can either be too energy-intensive methods (chillers) [19] or possibly methods with intense water spillage (i.e., wet cooling towers) [17,18]. For example, if a TED system replaces fully or partly the cooling provided by a wet cooling tower, electrical energy may be saved (depending on the atmospheric conditions related to the temperature of drinking water; under particularly cold atmospheric temperatures, wet cooling can reach comparably high COPs too [41,42]), and make-up water and the chemicals used to treat the circulating water will be spared. Moreover, the temperature approach (the difference between the exit temperature of the hot fluid and the entry temperature of the cold fluid) for a liquid-to-liquid heat exchanger is in the range of 1 to 2 °C. This means that, for equal drinking water and (wet bulb) outside temperatures, a TED system will be more efficient compared to cooling towers, which have a temperature approach of 4 to 8 °C [19]. If a TED system replaces (fully or partly) the cooling provided by a chiller, energy will for sure be saved (because the COPs of these systems are always by orders of magnitude different, typically ranging between 2.40 and 6.39 [42]).

The exact sustainability gain from TED will depend on the reference situation. To determine the overall sustainability gains from TED, modeling could be done by taking into account the atmospheric conditions (and thus the operation performance of systems operating with outside air), varying cooling loads in time and the temperature of the available drinking water for the cooling [43]. Further, to assess the total environmental benefits of TED systems in addition to CO_2 footprint reduction, a life cycle analysis (LCA) should be performed. This takes into account all environmental effects and also includes the construction of the equipment and the yearly material flows [44,45].

4.3. Practical Implications

Based on this study, it is suggested to install TED units on large flow transport pipes (flow > 250 m^3/h) either near the drinking water treatment plant or before the reservoirs. First, the availability of higher flows will linearly increase the retrievable energy. Second, energy recovery close to the drinking water treatment plant or just before the reservoir

will have less impact on the water temperature at the customers' tap due to the longer transport distances or longer residence time in the reservoir, which gives time to balance the elevated temperature after the energy recovery to the soil temperature. Third, the larger TED systems with higher flows will become environmentally and economically beneficial because of the higher CO_2 emission reductions and because of the economies of scale, reducing the (relative) investment costs for TED installations [37]. Further, where the TED units are not providing direct cooling in winter and are used for storing the cold (for providing space cooling in summer) or charging the ATES (for underground heat and cold balance), these must be coupled with existing heating/cooling grids (ATES systems) to save the cost further.

The cold recovery potential in this study was calculated based on the days in which the temperature of drinking water is lower than the maximum temperature allowed at the exit of the heat exchanger. It is thus purely theoretical. In practice, operators may want to leave a safety margin (in Sanquin's case, it is 1 °C), and thus, if T_{max} is 15 °C, the cold recovery will not start if drinking water is warmer than 14 °C.

5. Conclusions

This study examined thermal energy recovery from drinking water in a non-chlorinated drinking water distribution system with a focus on maximizing the recovered energy for cooling purposes. The conclusions are:

- Higher water flows and higher T_{max} (water temperature limit after cold recovery) will allow more energy recovery from drinking water for cooling purposes. In the Sanquin case, increasing T_{max} from 15 °C to 30 °C resulted in an increase in energy recovery from 27 TJ/y to 157 TJ/y;
- The drinking water temperature of the water after cold recovery with T_{max} of 15, 20, 25 and 30 °C will resemble the soil temperature within a distance of approximately 4 km. This means that cold recovery from drinking water hardly affects the temperature of the drinking water at the customers' tap;
- Thermal energy recovered from drinking water, for cooling purposes, can either be used for free cooling or for enhancing the performance and efficiency of cooling units (either used as a pre-coolant in compression cooling machines or as a condensing fluid in chillers);
- TED systems having a higher coefficient of performance (COP) results in a reduction of greenhouse gas emissions by more than 90%, compared to traditional cooling methods, such as chillers, dry coolers, hybrid cooler and cooling towers.

Supplementary Materials: The following are available online at https://www.mdpi.com/article/10.3390/en14092413/s1, Figure S1: Schematic description of Sanquin- full scale cold recovery system in Amsterdam, Table S1: Model input parameters.

Author Contributions: Funding acquisition, J.P.v.d.H.; investigation, J.I.A.; supervision, G.L. and J.P.v.d.H.; writing—original draft, J.I.A.; writing—review and editing, J.I.A., S.G., L.Z., G.L. and J.P.v.d.H.. All authors have read and agreed to the published version of the manuscript.

Funding: This research was funded by the Topsector Water and Maritime TKI Water Technology Program, grant nr. 2015TUD003, of the Dutch Ministry of Economic Affairs and Climate Change.

Acknowledgments: This work was supported by Waternet, the water utility of Amsterdam and surroundings.

Conflicts of Interest: The authors declare no conflict of interest.

Nomenclature

DWDNs	Drinking water distribution networks
DWDSs	Drinking water distribution systems
TED	Thermal energy recovery from drinking water
ATES	Aquifer thermal energy storage
T_{max}	Maximum temperature standard after cold recovery
GHG	Greenhouse gas
AOC	Assimilable organic carbon
$T_{feed\ water}$	Incoming feed water temperature
ΔT	Temperature difference between $T_{feed\ water}$ and T_{max}
COP	Coefficient of performance
HE	Heat exchanger
$T_{reference}$	Reference temperature pipeline
ATP	Adenosine triphosphate

References

1. Li, W.W.; Yu, H.Q.; Rittmann, B.E. Chemistry: Reuse water pollutants. *Nature* **2015**, *528*, 29–31. [CrossRef]
2. Van der Hoek, J.P.; de Fooij, H.; Struker, A. Wastewater as a resource: Strategies to recover resources from Amsterdam's wastewater. *Resour. Conserv. Recycl.* **2016**, *113*, 53–64. [CrossRef]
3. Wang, X.; McCarty, P.L.; Liu, J.; Ren, N.-Q.; Lee, D.-J.; Yu, H.-Q.; Qian, Y.; Qu, J. Probabilistic evaluation of integrating resource recovery into wastewater treatment to improve environmental sustainability. *Proc. Natl. Acad. Sci. USA* **2015**, *112*, 1630. [CrossRef]
4. Schetters, M.J.A.; van der Hoek, J.P.; Kramer, O.J.I.; Kors, L.J.; Palmen, L.J.; Hofs, B.; Koppers, H. Circular economy in drinking water treatment: Reuse of ground pellets as seeding material in the pellet softening process. *Water Sci. Technol.* **2014**, *71*, 479–486. [CrossRef]
5. Elías-Maxil, J.A.; Hofman, J.; Wols, B.; Clemens, F.; van der Hoek, J.P.; Rietveld, L. Development and performance of a parsimonious model to estimate temperature in sewer networks. *Urban Water J.* **2017**, *14*, 829–838. [CrossRef]
6. Kehrein, P.; van Loosdrecht, M.; Osseweijer, P.; Garfí, M.; Dewulf, J.; Posada, J. A critical review of resource recovery from municipal wastewater treatment plants—Market supply potentials, technologies and bottlenecks. *Environ. Sci. Water Res. Technol.* **2020**, *6*, 877–910. [CrossRef]
7. Diaz-Elsayed, N.; Rezaei, N.; Ndiaye, A.; Zhang, Q. Trends in the environmental and economic sustainability of wastewater-based resource recovery: A review. *J. Clean. Prod.* **2020**, *265*, 121598. [CrossRef]
8. Van der Hoek, J.P. Climate change mitigation by recovery of energy from the water cycle: A new challenge for water management. *Water Sci. Technol.* **2012**, *65*, 135–141. [CrossRef] [PubMed]
9. Van der Hoek, J.P.; Mol, S.; Janse, T.; Klaversma, E.; Kappelhof, J. Selection and prioritization of mitigation measures to realize climate neutral operation of a water cycle company. *J. Water Clim. Chang.* **2015**, *7*, 29–38. [CrossRef]
10. Lam, K.L.; van der Hoek, J.P. Low-Carbon Urban Water Systems: Opportunities beyond Water and Wastewater Utilities? *Environ. Sci. Technol.* **2020**, *54*, 14854–14861. [CrossRef] [PubMed]
11. Deng, Z.; Mol, S.; van der Hoek, J.P. Shower heat exchanger: Reuse of energy from heated drinking water for CO2 reduction. *Drink. Water Eng. Sci.* **2016**, *9*, 1–8. [CrossRef]
12. Ahmad, J.I.; Liu, G.; Van der Wielen, P.W.J.J.; Medema, G.; Van der Hoek, J.P. Effects of cold recovery technology on the microbial drinking water quality in unchlorinated distribution systems. *Environ. Res.* **2020**, *183*, 109175. [CrossRef] [PubMed]
13. Stocker, T.; Qin, D.; Plattner, G.; Tignor, M.; Allen, S.; Boschung, J.; Nauels, A.; Xia, Y. IPCC, 2013: Summary for policymakers in climate change 2013: The physical science basis, contribution of working group I to the fifth assessment report of the intergovernmental panel on climate change. *Camb. Univ. Press Camb.* **2013**. [CrossRef]
14. Adnot, J. *Energy Efficiency and Certification of Central Air Conditioners (EECCAC)*; Armines: Paris, France, 2003.
15. Van der Hoek, J.P.; Mol, S.; Giorgi, S.; Ahmad, J.I.; Liu, G.; Medema, G. Energy recovery from the water cycle: Thermal energy from drinking water. *Energy* **2018**, *162*, 977–987. [CrossRef]
16. Mol, S.; Kornman, J.; Kerpershoek, A.; Van Der Helm, A. Opportunities for public water utilities in the market of energy from water. *Water Sci. Technol.* **2011**, *63*, 2909–2915. [CrossRef]
17. Kubba, S. Chapter Nine—Impact of Energy and Atmosphere. In *Handbook of Green Building Design and Construction*, 2nd ed.; Kubba, S., Ed.; Butterworth-Heinemann: Cambridge, MA, USA, 2017; pp. 443–571.
18. Wei, X.; Li, N.; Peng, J.; Cheng, J.; Hu, J.; Wang, M. Performance Analyses of Counter-Flow Closed Wet Cooling Towers Based on a Simplified Calculation Method. *Energies* **2017**, *10*, 282. [CrossRef]
19. Chiang, C.-Y.; Yang, R.; Yang, K.-H. The Development and Full-Scale Experimental Validation of an Optimal Water Treatment Solution in Improving Chiller Performances. *Sustainability* **2016**, *8*, 615. [CrossRef]
20. Van der Hoek, J.P. Towards a climate neutral water cycle. *J. Water Clim. Chang.* **2012**, *3*, 163–170. [CrossRef]
21. Blokker, E.J.M.; van Osch, A.M.; Hogeveen, R.; Mudde, C. Thermal energy from drinking water and cost benefit analysis for an entire city. *J. Water Clim. Chang.* **2013**, *4*, 11–16. [CrossRef]

22. Vvan der Hoek, J.P.; Mol, S.; Ahmad, J.I.; Liu, G.; Medema, G. Thermal energy recovery from drinking water. In Proceedings of the 10th International Conference on Sustainable Energy and Environmental Protection: Renewable Energy Sources, Bled, Slovenia, 27–30 June 2017; pp. 23–32.
23. Van der Wielen, P.W.J.J.; Italiaander, R.; Wullings, B.A.; Heijnen, L.; van der Kooij, D. Opportunistic pathogens in drinking water in the Netherlands. In *Microbial Growth in Drinking-Water Supplies. Problems, Causes, Control and Research Needs*, 1st ed.; van der Kooij, D., van der Wielen, P.W.J.J., Eds.; IWA Publishing: London, UK, 2013; pp. 177–205.
24. Ahmad, J.I.; Dignum, M.; Liu, G.; Medema, G.; van der Hoek, J.P. Changes in biofilm composition and microbial water quality in drinking water distribution systems by temperature increase induced through thermal energy recovery. *Environ. Res.* **2021**, *194*, 110648. [CrossRef]
25. Pellegrini, M.; Bianchini, A. The Innovative Concept of Cold District Heating Networks: A Literature Review. *Energies* **2018**, *11*, 236. [CrossRef]
26. Guo, X.; Hendel, M. Urban water networks as an alternative source for district heating and emergency heat-wave cooling. *Energy* **2018**, *145*, 79–87. [CrossRef]
27. Liu, F.; Tait, S.; Schellart, A.; Mayfield, M.; Boxall, J. Reducing carbon emissions by integrating urban water systems and renewable energy sources at a community scale. *Renew. Sustain. Energy Rev.* **2020**, *123*, 109767. [CrossRef]
28. Zhou, X.; Ahmad, J.I.; van der Hoek, J.P.; Zhang, K. Thermal energy recovery from chlorinated drinking water distribution systems: Effect on chlorine and microbial water and biofilm characteristics. *Environ. Res.* **2020**, *187*, 109655. [CrossRef]
29. Prest, E.I.; Hammes, F.; van Loosdrecht, M.C.M.; Vrouwenvelder, J.S. Biological Stability of Drinking Water: Controlling Factors, Methods, and Challenges. *Front. Microbiol.* **2016**, *7*, 45. [CrossRef]
30. El-Chakhtoura, J.; Prest, E.; Saikaly, P.; Van Loosdrecht, M.; Hammes, F.; Vrouwenvelder, H. Dynamics of bacterial communities before and after distribution in a full-scale drinking water network. *Water Res.* **2015**, *74*, 180–190. [CrossRef] [PubMed]
31. Van der Kooij, D. Assimilable organic carbon as an indicator of bacterial regrowth. *J. Am. Water Work. Assoc.* **1992**, *84*, 57–65. [CrossRef]
32. Van der Kooij, D.; Van der Wielen, P.W. Microbial growth in drinking-water supplies: Problems, causes, control and research needs. *Water Intell. Online* **2013**, *12*, 9781780400419. [CrossRef]
33. Smeets, P.; Medema, G.; Van Dijk, J. The Dutch secret: How to provide safe drinking water without chlorine in the Netherlands. *Drink. Water Eng. Sci.* **2009**, *2*, 1–14. [CrossRef]
34. Staatscourant. *Staatscourant (State Journal in Dutch) 2011 Decree of 23 May 2011 Concerning the Regulations for the Production and Distribution of Drinking Water and the Organisation of the Public Drinking Water Supply. 293*; Staatscourant: The Hague, The Netherlands, 2011.
35. Blokker, E.J.M.; Pieterse-Quirijns, E.J. Modeling temperature in the drinking water distribution system. *J. Am. Water Works Assoc.* **2013**, *105*, E19–E28. [CrossRef]
36. List Emission Factors (Lijst Emissiefactoren). Available online: https://www.co2emissiefactoren.nl/lijst-emissiefactoren/ (accessed on 6 July 2020).
37. Reinstra, O.; Mark, R.V.d. *Heating and Cooling Demonstration Monitoring, Drinking Water Cooling, Efficiency Upgrade*; D7.3; European Union: Amsterdam, The Netherlands, 2019; p. 65.
38. Rossman, L.A. *Epanet 2 Users Manual*; U.S. Environmental Protection Agency: Washington, DC, USA, 2000.
39. Visser, P.W.; Kooi, H.; Bense, V.; Boerma, E. Impacts of progressive urban expansion on subsurface temperatures in the city of Amsterdam (The Netherlands). *Hydrogeol. J.* **2020**, *28*, 1755–1772. [CrossRef]
40. Agudelo-Vera, C.; Avvedimento, S.; Boxall, J.; Creaco, E.; de Kater, H.; Di Nardo, A.; Djukic, A.; Douterelo, I.; Fish, E.K.; Iglesias Rey, L.P.; et al. Drinking Water Temperature around the Globe: Understanding, Policies, Challenges and Opportunities. *Water* **2020**, *12*, 1049. [CrossRef]
41. Kojok, F.; Fardoun, F.; Younes, R.; Outbib, R. Hybrid cooling systems: A review and an optimized selection scheme. *Renew. Sustain. Energy Rev.* **2016**, *65*, 57–80. [CrossRef]
42. Yu, F.W.; Chan, K.T.; Sit, R.K.Y.; Yang, J. Review of Standards for Energy Performance of Chiller Systems Serving Commercial Buildings. *Energy Procedia* **2014**, *61*, 2778–2782. [CrossRef]
43. Liberati, P.; De Antonellis, S.; Leone, C.; Joppolo, C.M.; Bawa, Y. Indirect Evaporative cooling systems: Modelling and performance analysis. *Energy Procedia* **2017**, *140*, 475–485. [CrossRef]
44. Shah, V.P.; Debella, D.C.; Ries, R.J. Life cycle assessment of residential heating and cooling systems in four regions in the United States. *Energy Build.* **2008**, *40*, 503–513. [CrossRef]
45. Sambito, M.; Freni, G. LCA Methodology for the Quantification of the Carbon Footprint of the Integrated Urban Water System. *Water* **2017**, *9*, 395. [CrossRef]