Supplementary Materials

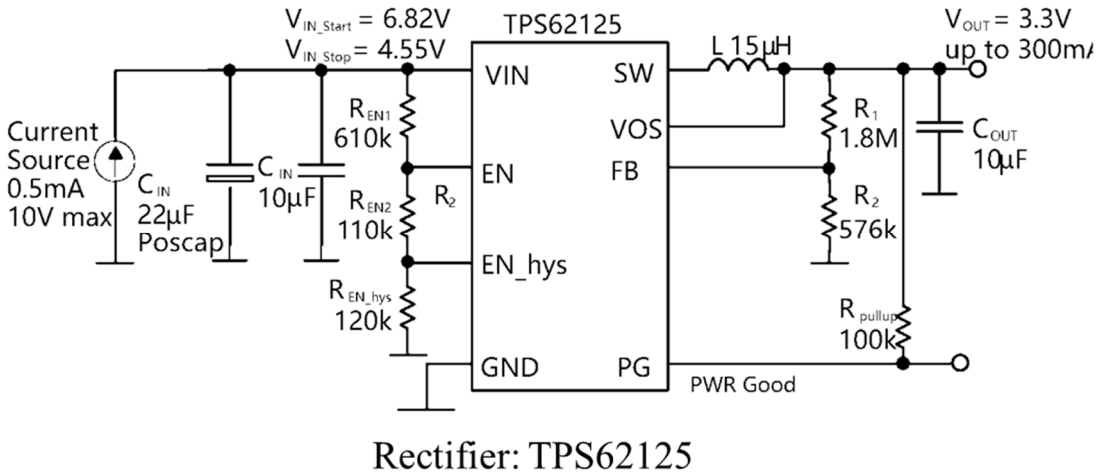

Figure S1. Rectifier of self-powered wireless temperature monitoring system.

Figure S2. Signal microcontroller of self-powered wireless temperature monitoring system.

MSP430 is not only an ultra-low power signal microcontroller, but also has the function of temperature sensing, achieving the goal of signal reception and temperature monitoring.

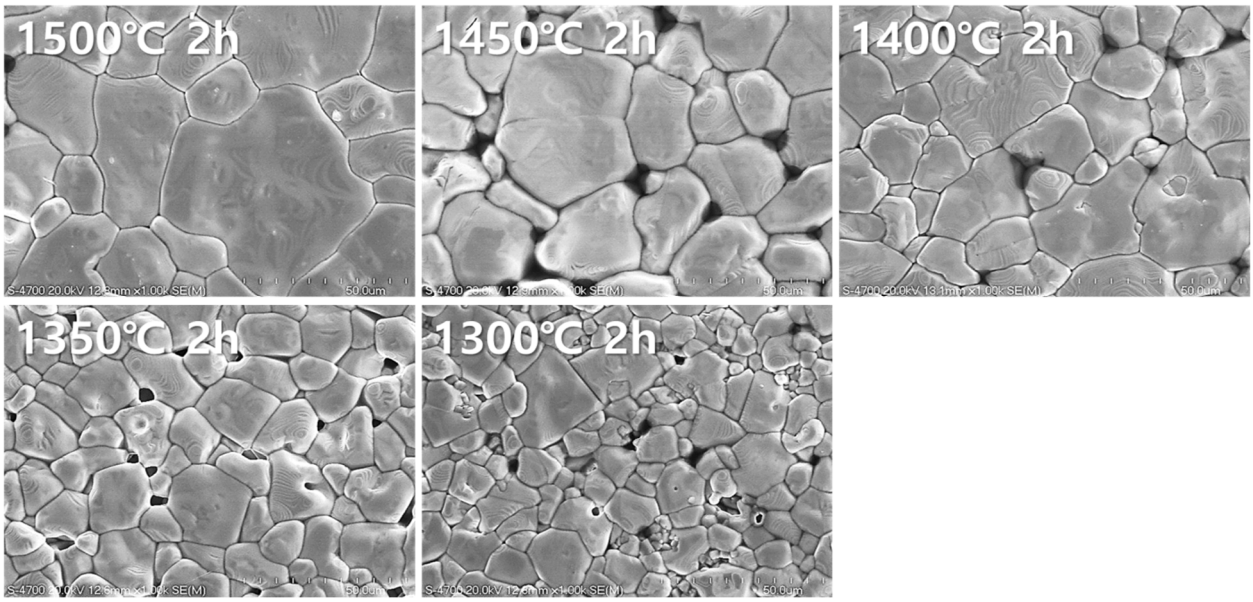

Figure S3. Surface field emission-scanning electron microscope (FE-SEM) images of the $BCTZC_{0.3}$ ceramics sintered at different temperatures.

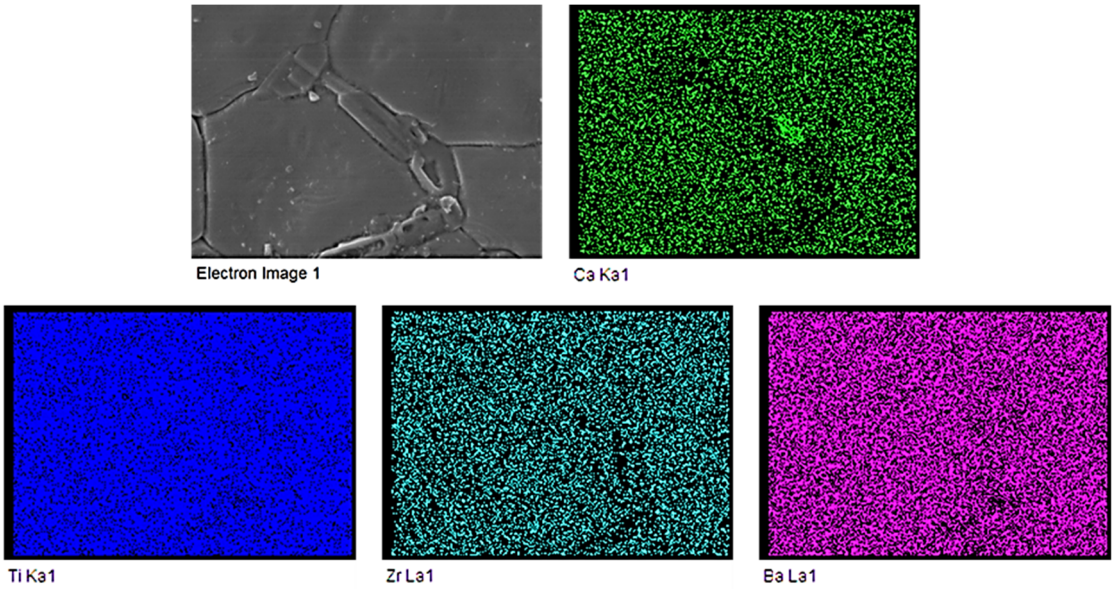

Figure S4. Energy dispersive spectra (EDS) mapping analysis of the 1500 °C $BCTZC_{0.3}$ composites.

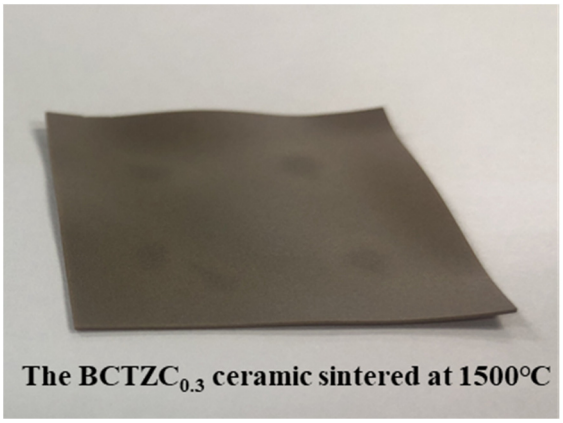

Figure S5. Surface images of the $BCTZC_{0.3}$ sample sintered at 1500 ℃.

Figure S3 shows surface images of the $BCTZC_{0.3}$ samples with changes in the sintering temperatures. It can be clearly seen that with the gradual increase of sintering temperature, the grain size also increases. When the sintering temperature reaches 1500 °C and the grain size reaches the maximum, CuO plays an important role as a sintering aid [1]. According to Figure S4, energy dispersive spectra (EDS) mapping analysis of the 1500 °C $BCTZC_{0.3}$ composites, when the sintering temperature reaches 1500 °C, Ba, Ti, Ca, and Zr components were detected, whereas no secondary phase corresponding to CuO was detected. Furthermore, the Ba, Ca, Ti, Zr, and Cu atoms were homogeneously exposed on the surface of the $BCTZC_{0.3}$ sample. However, when the sintering temperature reached 1500 °C, the samples were seriously bent, as in Figure S5, so the samples sintered at 1450 °C were used for subsequent experiments.

Reference

1. Chen, T.; Zhang, T.; Wang, G.; Zhou, J.; Zhang, J.; Liu, Y. Effect of CuO on the microstructure and electrical properties of Ba 0.85 Ca 0.15 Ti 0.90 Zr 0.10 O 3 piezoceramics. *J. Mater. Sci.* **2012**, *47*, 4612–4619.