energies

MDPI

Article

CO_2 Recycling in the Iron and Steel Industry via Power-to-Gas and Oxy-Fuel Combustion

Jorge Perpiñán [1], Manuel Bailera [1,2], Luis M. Romeo [1,*], Begoña Peña [1] and Valerie Eveloy [3]

[1] Escuela de Ingeniería y Arquitectura, Universidad de Zaragoza, María de Luna 3, 50018 Zaragoza, Spain; jorge.perpinan@unizar.es (J.P.); mbailera@unizar.es (M.B.); bpp@unizar.es (B.P.)
[2] Graduate School of Creative Science and Engineering, Waseda University, Tokyo 169-8555, Japan
[3] Department of Mechanical Engineering, Khalifa University, Abu Dhabi P.O. Box 127788, United Arab Emirates; valerie.eveloy@ku.ac.ae
* Correspondence: luismi@unizar.es

Abstract: The iron and steel industry is the largest energy-consuming sector in the world. It is responsible for emitting 4–5% of the total anthropogenic CO_2. As an energy-intensive industry, it is essential that the iron and steel sector accomplishes important carbon emission reduction. Carbon capture is one of the most promising alternatives to achieve this aim. Moreover, if carbon utilization via power-to-gas is integrated with carbon capture, there could be a significant increase in the interest of this alternative in the iron and steel sector. This paper presents several simulations to integrate oxy-fuel processes and power-to-gas in a steel plant, and compares gas productions (coke oven gas, blast furnace gas, and blast oxygen furnace gas), energy requirements, and carbon reduction with a base case in order to obtain the technical feasibility of the proposals. Two different power-to-gas technology implementations were selected, together with the oxy blast furnace and the top gas recycling technologies. These integrations are based on three strategies: (i) converting the blast furnace (BF) process into an oxy-fuel process, (ii) recirculating blast furnace gas (BFG) back to the BF itself, and (iii) using a methanation process to generate CH_4 and also introduce it to the BF. Applying these improvements to the steel industry, we achieved reductions in CO_2 emissions of up to 8%, and reductions in coal fuel consumption of 12.8%. On the basis of the results, we are able to conclude that the energy required to achieve the above emission savings could be as low as 4.9 MJ/kg CO_2 for the second implementation. These values highlight the importance of carrying out future research in the implementation of carbon capture and power-to-gas in the industrial sector.

Keywords: ironmaking; power-to-gas; iron and steel industry; methanation; oxy-fuel combustion; top gas recycling

check for updates

Citation: Perpiñán, J.; Bailera, M.; Romeo, L.M.; Peña, B.; Eveloy, V. CO_2 Recycling in the Iron and Steel Industry via Power-to-Gas and Oxy-Fuel Combustion. *Energies* **2021**, *14*, 7090. https://doi.org/10.3390/en14217090

Academic Editor: Attilio Converti

Received: 27 September 2021
Accepted: 22 October 2021
Published: 29 October 2021

Publisher's Note: MDPI stays neutral with regard to jurisdictional claims in published maps and institutional affiliations.

Copyright: © 2021 by the authors. Licensee MDPI, Basel, Switzerland. This article is an open access article distributed under the terms and conditions of the Creative Commons Attribution (CC BY) license (https://creativecommons.org/licenses/by/4.0/).

1. Introduction

The iron and steel sector is one of the most energy- and carbon-intensive in the world. Iron and steel making processes are still mostly coal-based and thus highly dependent on fossil fuels, releasing a substantial amount of CO_2 [1]. According to the Intergovernmental Panel on Climate Change (IPCC), the steel industry accounts for 4–5% of the total world CO_2 emission. It is the second largest consumer of industrial energy, consuming around 616 Mtoe (25.8 EJ) [2].

The iron and steel industry has a complex structure. However, only a limited number of processes are used worldwide that use similar energy resources and raw materials. Globally, steel is produced using two main routes, the blast furnace–basic oxygen furnace route (BF-BOF) and the direct scrap smelting route (electric arc furnace (EAF)). The BF-BOF route uses mainly iron ore, and depending on the facility, up to 30% scrap. The EAF route mainly uses scrap, and depending on the facility, up to 30% iron and iron ore [2–4].

Another fundamental difference between the two routes is the nature of the energy input. In the case of the BF-BOF, mainly coke is used as fuel, while the EAF route produces

steel using mainly recycled steel and electricity. The overall process of the two main steel production routes is depicted in Figure 1.

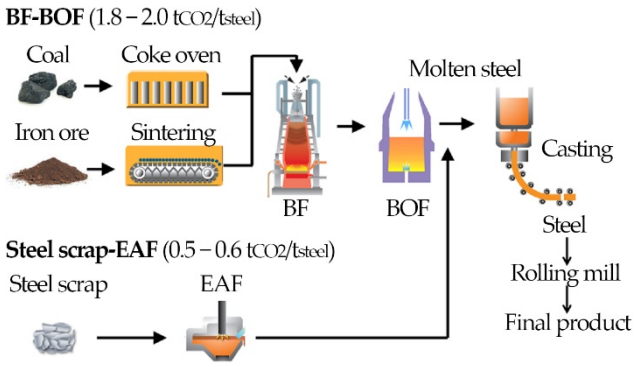

Figure 1. Main routes of steel production [4].

The BF-BOF route consists of several processes: sintering, coke oven, blast furnace, basic oxygen furnace, and the final stage of casting and rolling. The sintering is used to agglomerate iron ore. The coke oven allows for the obtaining of coke from coal by pyrolysis. In the BF, the iron ore is reduced by coke obtaining pig iron, then the BOF lowers the carbon content of the iron thus obtaining steel, and finally the hot metal passes through casting and rolling to obtain the final desired form. Along this processes, different waste exhaust fuel gases are obtained, which can be used in the steel plant (coke oven gas (COG), blast furnace gas (BFG), and basic oxygen furnace gas (BOFG)). All of them contain CO_2, which is emitted into the atmosphere unless the waste gas is recycled and/or treated.

A third iron and steel production route, the direct reduced iron (DRI)-EAF route, uses natural gas or coal-based syngas as reducing agent in combustion-free reactors to directly reduce the iron ore into metallic iron, which is processed in EAFs to produce steel. DRI processes differ in terms of the iron source (fine ore or pellets) and reactor type (fluidized bed, fixed bed, or shaft furnace). Among them, the commercially available Energiron and Midrex concepts, which use iron pellets in shaft furnaces with countercurrent moving beds, are the best options from an environmental point of view. Although representing significantly smaller steel production market shares than either the BF-BOF or EAF routes, DRI-EAF has the potential for significant carbon abatement.

Aiming for solutions that substantially reduce CO_2 while providing additional benefits, power-to-gas (PtG) stands out as a promising candidate [5]. The PtG concept converts renewable electricity into valuable gases using an electrolysis stage and uses CO_2 that may come from industrial processes. Conventionally, the conversion of electricity is carried out by water electrolysis, which produces H_2. The consumption of this H_2 together with CO_2 (or CO), through the Sabatier reaction (Equation (1) or Equation (2)), produces methane, water, and heat [6].

$$CO_2 + 4H_2 \leftrightarrow CH_4 + 2H_2O \; \Delta H_{298K} = -164.9 \text{ kJ/mol} \quad (1)$$

$$CO + 3H_2 \leftrightarrow CH_4 + H_2O \; \Delta H_{298K} = -206.4 \text{ kJ/mol} \quad (2)$$

When the electrolyser is fed from a renewable energy source, the obtained synthetic natural gas (SNG) can be considered neutral in CO_2 emissions. The amount of CO_2 that is emitted by this SNG is the same as that is required for its own formation [7]. To make the most of this technology, one can use it with oxy-fuel combustion, since it produces a pure stream of CO_2 for the methanation, while electrolysis provides pure O_2 for the oxy-fuel combustion [7–10].

In the case of the iron and steel industry, electrolysis can be performed as usual on water to produce H_2 or on the CO_2 emissions of the industry to obtain syngas (CO_2

electrolysis). Both the syngas and the H_2 produced can be used in a methanation process to obtain methane (power-to-methane) [11].

Power-to-H_2 can be integrated in ironmaking in two ways. The first method consists in injecting the H_2 as auxiliary reducing agent in conventional BFs to reduce the carbon content of the fossil reducing gas, while the second technique uses the H_2 as reducing agent in DRI reactors. Studies assessing the injection of H_2 in BFs show the potential of reducing CO_2 emissions by approximately 20%, barely affecting the overall energy demand of the process. In this case, the injected flow of H_2 should be around 30 kg H_2/t pig iron, to not significantly modify the operating conditions inside the furnace. Regarding the second method, i.e., DRI, integration of power-to-H_2 has the potential to lead to the low energy consumption (3.5–3.7 MWh/t steel) and net-zero CO_2 emissions (if carbon-free electricity is used, corresponding to 97–100% emission reduction). Still, to make the power-to-H_2-DRI route competitive, carbon allowances should reach approximately EUR 62 per t CO_2 and electricity price should be below EUR 40 per MWh_e [11]. The subsequent process following the DRI, i.e., the EAF, can also benefit from power-to-methane integrations, as partial substitution of electrical energy by natural gas in EAF may be beneficial for CO_2 reduction, thanks to the increment in the efficiency of the process [12].

Since 95% of the world's iron production is coal-based, it is important to focus on the BF-BOF route, which is the focus of this study. Power-to-syngas and power-to-methane can supply a useful fuel to be injected in a conventional BF, acting as a renewable reducing agent (recycled CO_2) [11]. Recent studies have concluded that CO_2 emission reduction in power-to-syngas, compared to conventional ironmaking, could be in the range of 11% to 22%, with typical electrolysis capacities of 100–900 MW. In the case of power-to-methane, the CO_2 reduction would be between 13% and 19%, requiring water electrolysis power capacities of about 880 MW [11,13].

The objective of this paper was to study a novel concept that integrates power-to-gas technology in the iron and steel industry, together with oxy-fuel combustion and top gas recycling. Two types of integration, which differ in the source of the H_2 (water electrolysis or COG), were studied and compared to a reference iron and steel plant in terms of energy requirement and emission reduction. The main novelty of the study relied on the reduction of energy penalties thanks to the combination of power-to-gas and oxy-fuel combustion, which has not been quantified so far in the literature specifically for the iron and steel industry.

2. Description of Case Studies

Three case studies were undertaken to evaluate the energy requirements and carbon emission reductions of power-to-gas (PtG) integrated with blast furnace-basic oxygen furnace (BF-BOF) plants relative to a conventional reference BF-BOF process. The reference plant is described in Section 2.1. The proposed power-to-methane integration in ironmaking with oxy-fuel combustion and top gas recycling (TGR) is described in Section 2.2, and methanation of coke oven gas (COG) integration in ironmaking with oxy-fuel combustion and TGR in Section 2.3.

2.1. Case 0: Reference Plant for BF-BOF Ironmaking

The plant consists of a sintering process, coke oven, hot stoves, BF, air separation unit (ASU), BOF, and casting and rolling. The block diagram of the reference ironmaking plant is shown in Figure 2, for which an average production of 2.8 million t_{steel}/year (7.7 kt/day) was assumed [14]. For the sake of simplicity, secondary processes were neglected (e.g., material recirculation in sintering), such as in similar studies [15,16]. The relevance of these processes to this study is minor since the objective was to conduct a first assessment of the novel integration under overall energy and mass balances.

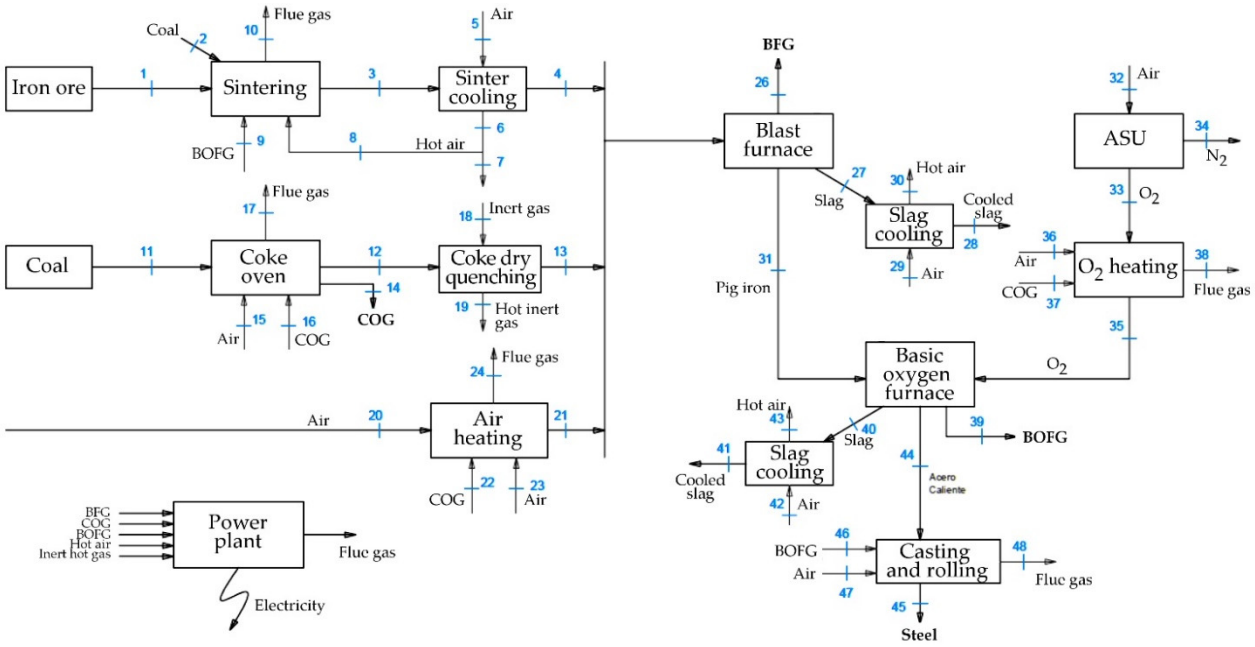

Figure 2. Block diagram of the reference ironmaking plant (Case 0).

The main input mass flows were iron ore, coal (converted to pure C in the coke oven), and air (for combustion in BF and for oxygen production in the ASU), as shown in Figure 2. Regarding the inputs to the BOF, we assumed that only pig iron was used (without scrap metal), as in others studies [3,4,15,16]. Those processes requiring heat at high temperature were supplied with thermal energy by consuming part of the fuel gases by-produced in the coke oven, BF and BOF (Table 1) instead of using additional fossil fuels.

Table 1. Elemental composition considered for the fuel gases produced as by-products in the ironmaking plant (vol %), according to the ranges reported in [3].

	Natural Gas	COG	BFG	BOFG
H_2	0	56	4	1.5
CH_4	100	30	0	0
CO	0	10	25	66.5
CO_2	0	5	20	20
O_2	0	1	0	2
N_2	0	5	51	10

In addition, there was a power plant for the utilization of the remaining COG, BFG, and BOFG, as well as for gas streams at high temperature coming from cooling processes (sinter, slag, and coke cooling).

2.2. Case 1: Power-to-Methane Integration in Ironmaking with Oxy-Fuel Combustion and TGR

The modified ironmaking plant integrated with power-to-methane in Case Study 1 is depicted in Figure 3. The BF was here operated under oxy-fuel regime, and coke input to the BF was partially replaced by synthetic methane (stream 140, Figure 3). Part of the blast furnace gas (BFG) (stream 157) was recirculated (top gas recycling (TGR)), and the other was diverted to the power-to-gas plant (stream 157). Here, the emissions of the BF were used to obtain synthetic methane again by combining them with the H_2 from a low temperature electrolyser (stream 182). Thus, a continuous recycling of CO_2 was established. Moreover, the O_2 from the electrolyser (stream 183) was used for the oxy-fuel combustion in the BF, which allowed us to significantly reduce the ASU energy consumption. In addition

to the above new equipment necessary for the power-to-gas integration, new preheating blocks (O_2 + BFG preheating and CH_4 preheating) were also included.

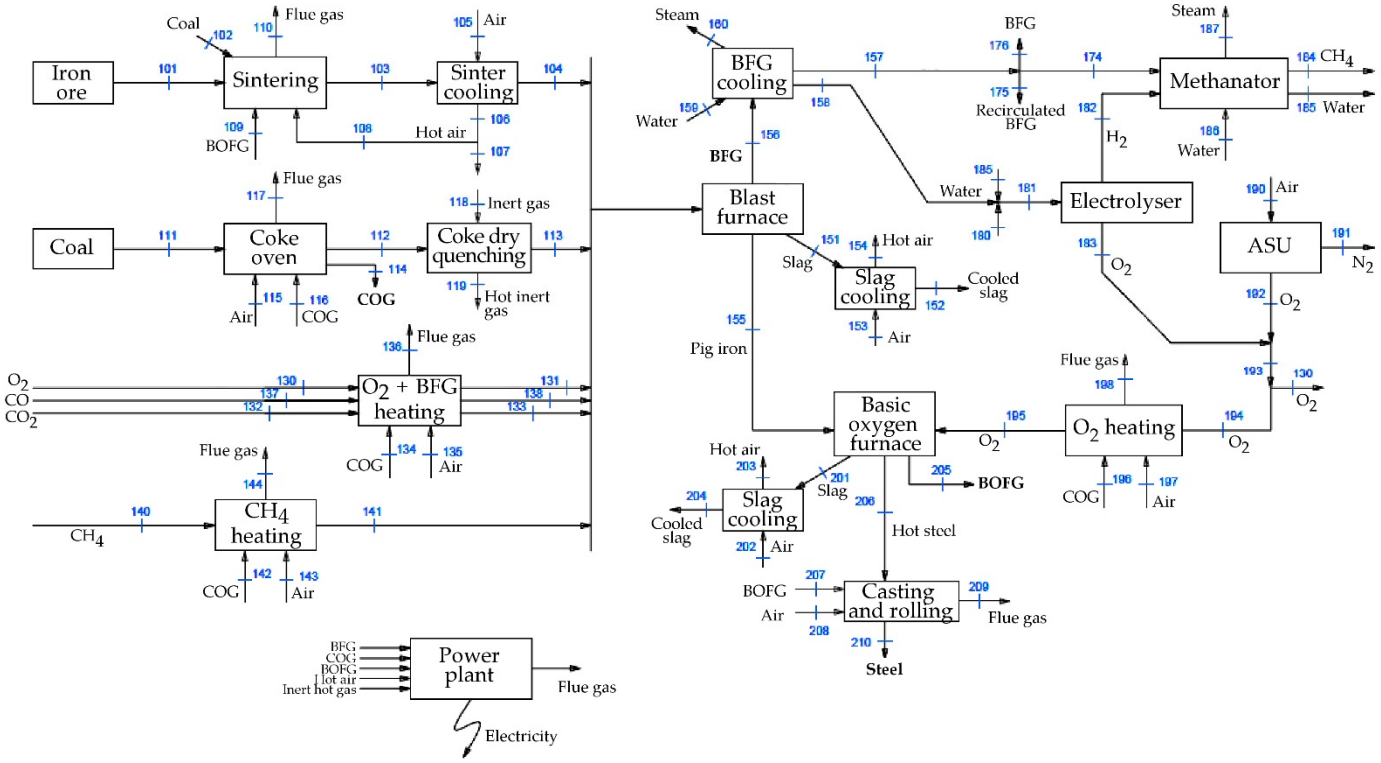

Figure 3. Block diagram of the integration of power-to-methane in ironmaking with oxy-fuel combustion and TGR (Case 1).

The oxy-blast furnace chosen for this case study ran in a nitrogen-free atmosphere. A pure stream of oxygen was introduced through the tuyeres instead of hot air, in order to obtain exhaust gases that were also nitrogen-free (composed only of CO_2 and CO). This concept is closely related to the top gas recycling. The TGR technology consists of recirculating the exhaust gases (mainly CO_2, CO, and H_2) back to the BF to reduce the coke (and consequently the air) consumption, which made the final BFG contain less N_2. In the present case, both oxyfuel and TGR technologies were simultaneously applied. The reason for applying TGR was that introducing a reducing gas (CO) diminished the coke consumption, while separating CO and CO_2 would have an energy penalization. The selected proportion between O_2 and CO_2 in the oxy-blast furnace was 40% O_2–60% CO_2.

The gas introduced in the methanation reactor was BFG, since it contains no nitrogen and large proportions of CO, which reduced the methanator H_2 requirement.

2.3. Case 2: Methanation of COG Integration in Ironmaking with Oxy-Fuel Combustion and TGR

The modified ironmaking plant for power-to-methane integration for Case Study 2 is depicted in Figure 4. In this case, the ironmaking worked in the same oxy-fuel regime with TFG as in Case 1, but here the COG (stream 114/382) was used as H_2 source in the methanation process instead of pure H_2. Since COG does not contain nitrogen, and has large contents of CH_4, H_2, and CO, it completely avoided the need for an electrolyser and its associated investment cost, unlike in Case 1. The rest of the operating conditions and assumptions remained the same as in the Case Study 1.

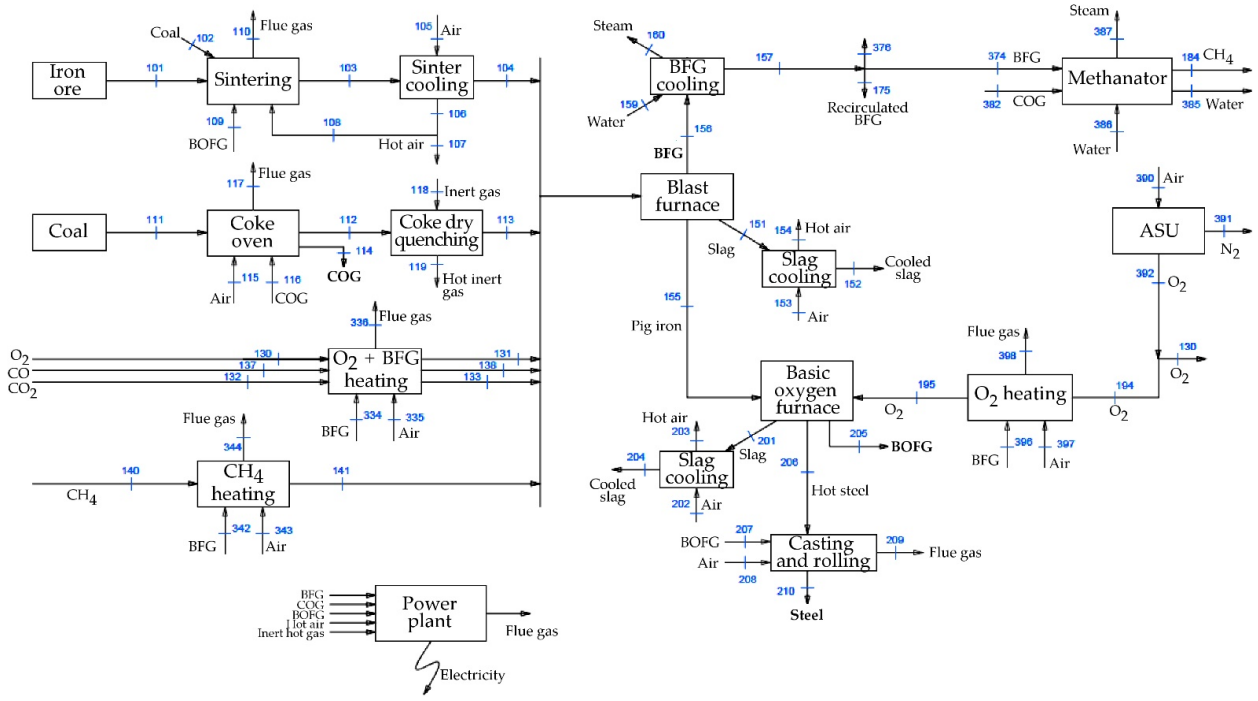

Figure 4. Block diagram of the integration of COG methanation in ironmaking with oxy-fuel combustion and TGR (Case 2).

In summary, in terms of produced gas utilization, Case 1 recycled BFG to the methanator and SNG to the BF, while Case 2 recycled both BFG and COG to the methanator and SNG to the BF.

3. Methodology

The modelling assumptions common to the analyses of Cases 0–2 plant concepts included steady-state conditions, ideal gases, and adiabatic reactions. Further case-specific assumptions are documented in Section 3.1.

The modelling methodology is based on overall mass balance (Equation (3)) and energy balance (Equation (4)) in steady state, applied to each equipment in Case 0, Case 1, and Case 2 plant layouts (Figures 2–4).

$$0 = \sum m_i - \sum m_o \tag{3}$$

$$0 = Q - W + \sum m_i h_i - \sum m_o h_o \tag{4}$$

where m is the mass flow, h the specific enthalpy, W the network, and Q the net heat transfer. Enthalpy can be written as Equation (5), where $\Delta_f h^{T_{ref}}$ is the enthalpy of formation at the reference temperature and c_p is the temperature-dependent specific heat.

$$h_i = \Delta_f h_i^{T_{ref}} + \int_{T_{ref}}^{T} c_{p,i} dT \tag{5}$$

When necessary, data from the literature were used. The specific assumptions for the subsystems (ironmaking, power plant, and power-to-gas) are described in the following subsections.

3.1. Iron and Steel Plant

For Case 0, in the ironmaking process (BF), instead of fixing the input mass flows of iron ore (Stream 1, Figure 2), coal (Stream 11, Figure 2), and hot blast (Stream 20, Figure 2), we calculated them from the mass balance by assuming a final composition of the steel and the BFG, taken from [17] and [3], respectively. The mass fraction of iron was set at 96% in

pig iron and 99.7% in steel, with carbon as the remaining component (other elements such as Si or Mn were neglected) [17]. The mole fraction of the BFG was fixed according to data from [3] in Table 1. The mass flows of the pig iron (Stream 31, Figure 2), BFG (Stream 26, Figure 2), and slag (Stream 27, Figure 2) were also calculated in the BF's mass and energy balances. The air for the hot blast was heated to 1200 °C by means of COG (Stream 22, Figure 2) [18].

The coal added to the sintering process was set at 5 wt % of the amount of iron treated [19]. The temperature of the sintered iron at the exit of this sintering process was assumed at 800 °C (Stream 3, Figure 2), which was later reduced to 150 °C (Stream 4, Figure 2) [16]. The amount of BOFG (Stream 9, Figure 2) and the cooling air (Stream 5, Figure 2) were calculated with the mass and energy balances for each block.

The coke produced in the coke oven was assumed as pure carbon, and the mole fraction of the COG was fixed as shown in Table 1. The coke temperatures before and after the coke dry quenching (CDQ) were 1100 °C (Stream 13, Figure 2) and 150 °C (Stream 13, Figure 2), respectively [2]. The mass flow of COG was calculated in a mass balance between the input coal and the output coke. The self-consumed COG and the inert gas needed for the CDQ were calculated in mass and energy balances for each block.

Regarding the air separation unit required for the BOF, we assumed that it produced pure streams of O_2 (Stream 33, Figure 2) and N_2 (Stream 34, Figure 2). The electricity consumption of the ASU was set at 1440 kJ per kilogram of oxygen produced [20]. The pure stream of oxygen was heated up to 1650 °C [3] by burning COG (Stream 37, Figure 2).

In the BOF, the amount of hot steel produced was assumed as a unit reference (1 kg of steel). The composition of the BOFG was again fixed according to Table 1, and the mass flows of slags (Stream 40, Figure 2), BOFG (Stream 39, Figure 2), and O_2 (Stream 35, Figure 2) were calculated by a mass and energy balance in the BOF.

For Cases 1 and 2, the assumptions and methodology explained for Case 0 were the same, with some minor changes. In the BF's mass balance, not only the iron ore, coal, BFG, and pig iron mass flows were calculated, but also the O_2 (Stream 130, Figure 3), CH_4 (Stream 140, Figure 3), and BFG (recirculated) (Stream 175, Figure 3). The O_2 demand for the BOF remained the same (Stream 195, Figure 2), but the amount of O_2 produced by the ASU was lower (Stream 192, Figure 2), since a by-product stream of O_2 from the electrolyser was used (Stream 183, Figure 3) (only for Case 1).

3.2. Power Plant

This plant produces electricity for self-consumption from the energetic gases of the steel plant (i.e., COG, BFG, BOFG) and from heat streams from other heat recovery processes (i.e., coke dry quenching and slag cooling). An overall efficiency of 17.9% was assumed for the power plant [16], because of the low temperatures of the heat recovery flows, the gas treatment before entering the boiler, and the limited calorific value of the gases (due to the high CO_2 content and the dilution in the N_2 present in the air).

3.3. Power-to-Gas Plant

In Case Study 1, the H_2 was produced from water electrolysis, while in Case Study 2, the H_2 came from the COG, which was directly diverted to methanation. The COG contained enough H_2 to produce all the necessary methane, but lacked CO_2. Therefore, some BFG was also diverted to methanation to fulfil the stoichiometric requirements of reactions (1) and (2). It is important to note that in Case 2, no electrolyser was needed. The methanation plant worked at 300 °C and 30 bar [7].

For the sake of simplicity, the electrolyser was assumed to produce pure streams of O_2 and H_2, while the methanation was set to produce a pure stream of methane. By these assumptions, as well as reactions Equations (1) and (2), we can easily solve the mass balance. Regarding electricity, the energy consumption of the low-temperature electrolyser was fixed at 4.5 kWh/Nm^3 [7,8,21].

4. Results and Discussion

The modelling results obtained for Cases 0, 1, and 2 are presented and discussed in Sections 4.1–4.3, respectively. In addition, the corresponding stream data for each Case are presented in the Appendix A.

4.1. Case 0: Reference Plant for BF-BOF Ironmaking

The mass flows of Case 0 are summarized in Table 2, where the main calculated variables are compared to data from the literature [3,11,15–17]. All results lay within reasonable limits, thus validating the results of the reference case, which was the basis for the rest of the analyses. As already stated in the methodology section, the input streams were calculated as a function of a desired steel output composition.

Table 2. Mass flows (kg/t steel) of the main streams calculated for Case 0, Case 1, and Case 2. Bibliographic data were taken from [3,11,15–17]. * Input data for solving mass and energy balances.

	Stream	Bibl.	Case 0	Case 1	Case 2
Raw materials	Iron ore	1550	1430	1430	1430
	Coal	560	520	460	460
Coke oven	COG	90	110	90	90
Blast furnace (BF)	Sinter	1550	1430	1430	1430
	Coke	400	420	370	370
	Air (hot blast)	1210	1280	-	-
	O_2 (hot blast)	-	-	310	310
	BFG (hot blast)	-	-	1060	1060
	CH_4 (hot blast)	-	-	65	65
	BFG	2420	2080	2190	2190
	Slag	280 *	280	280	280
	Pig iron	1040 *	1040	1040	1040
Basic oxygen furnace (BOF)	O_2	70	90	90	90
	Steel	1000	1000	1000	1000
	Slag	80 *	80	80	80
	BOFG	130 *	130	130	130
Power-to-gas (PtG)	O_2	-	-	210	-
	H_2	-	-	27	-
	BFG	-	-	139	14
	COG	-	-	-	91
	CH_4	-	-	65	65

The total electricity consumption of the ironmaking process was 874 MJ/t steel, and the electricity produced by the power plant was 1260 MJ/t steel (Table 3); therefore, the overall process was self-sufficient (typical power productions were about 1300 MJ/t steel in on-site power plants [15]). Regarding the thermal energy consumption, the BF was the largest consumer, representing 55% of the overall process when the air heating was accounted for (in the literature, the energy consumption of the blast furnace (BF) process can reach 70% of the total plant [3]). The heat removed by cooling the stoves of the BF was fixed at 1260 MJ/t pig iron, according to [22].

Table 3. Main energy streams (MJ/t steel) calculated for Case 0, Case 1, and Case 2. * From: [15].

	Process	Case 0	Case 1	Case 2
Thermal energy consumption	Sintering	523	523	523
	Coke oven	1631	1442	1442
	Air (hot blast)	1814	-	-
	O_2 + BFG (hot blast)	-	1239	1239
	CH_4 (hot blast)	-	431	431
	Blast furnace	2915	3900	3900
	O_2 heating	170	170	170
	BOF	1228	1228	1228
	Casting, rolling	300	300	300
	Total	8581	9233	9233
Electricity consumption	Sintering *	180	180	180
	Coke oven *	42	42	42
	Blast furnace *	376	376	376
	ASU	128	252	568
	BOF *	128	128	128
	Electrolyser	-	4991	-
	H_2 compressor	-	96	32
	CO_2 compressor	-	51	36
	Other *	20	20	20
	Total	874	6136	1382
Electricity production	Power plant	1260	1443	652

The percentage of utilization of COG, BFG, and BOFG by type of process is presented in Table 4, together with their energy density and mass flow production. In overall terms, the 46.5% energy content of these gases was used in internal processes of the plant, while the rest was used in the power plant (Figure 5). The total CO_2 emissions of the plant were 1718 kg/t steel (Figure 6), with BFG as the major emitting source (1368 kg/t steel). According to the literature, BF CO_2 emissions may range between 1270 and 1550 kg/t steel, and total emissions up to 2200 kg/t steel [16,23].

4.2. Case 1: Power-to-Methane Integration in Ironmaking with Oxy-Fuel Combustion and TGR

In Case 1, the installation included an oxygen blast furnace with top gas recycling and a power-to-gas (PtG) plant. The latter converted the CO_2 emissions into synthetic methane to be reinjected in the blast furnace, thus replacing some fossil fuel. The power capacity of the power-to-gas plant was sized to produce a SNG amount enough to replace 50 kg coke/t steel. According to the simulation, the replacement ratio was 1.3 kg SNG/kg coke, and therefore the necessary H_2 was 27 kg H_2/t steel. Assuming a steel production of 7.7 kt/day, we found the electrolysis power capacity to be installed was 431.9 MW_e if working continuously (4.5 kWh/Nm^3 H_2 electricity consumption). Currently, the world's largest planned electrolyser farm has a power capacity of 100 MW [24], which is within the same order of magnitude as the PtG capacity required for the proposed case study.

Table 4. Mass flow, energy content, and use of the fuel gases produced in the ironmaking process.

		Case 0			Case 1			Case 2		
		COG	BFG	BOFG	COG	BFG	BOFG	COG	BFG	BOFG
Utilization of the energy content of the gases by type of process (%)	Mass flow (kg/t steel)	110	2080	130	90	2140	130	90	2140	130
	Energy content (MJ/kg)	40.0	2.7	6.3	40.0	5.7	6.3	40.0	5.7	6.3
	Internal use	99.1	0	99.0	0	42.2	99.0	0	43.6	99.0
	Power plant	0.9	100	1.0	100	1.6	1.0	0.3	6.0	1.0
	Methanation	-	-	-	0	6.5	0	99.7	0.6	0
	TGR	-	-	-	0	49.7	0	0	49.7	0

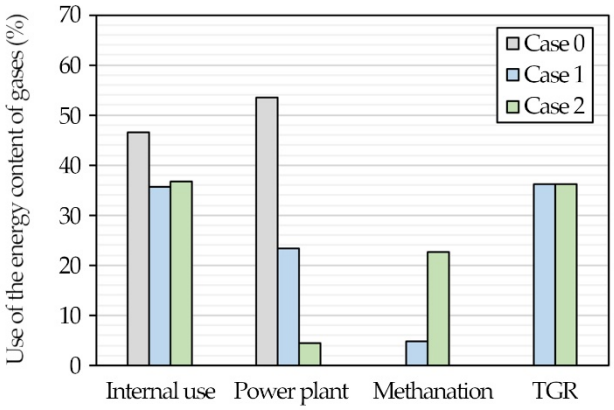

Figure 5. Use of the energy content of the total gases (COG, BFG, and BOFG) by type of process for each plant layout (i.e., Case 0–2).

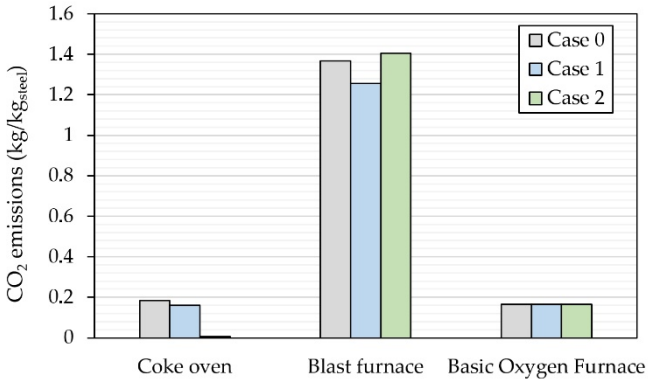

Figure 6. CO_2 emissions by process for each plant layout (i.e., Case 0–2).

The total electricity consumption of the overall plant was 6.1 MJ/t steel, which means an increment of 702% with respect to the base case scenario (Table 3). The electricity demand of those processes already existing in the base simulation was kept constant [15], and the new electricity consumptions corresponding to the PtG plant were added (the production of H_2 represents 81% of the total electricity consumption). Despite the power plant now producing 14.5% more power (1.4 MJ/t steel), the overall process is no longer self-sufficient. The remaining electricity (4.7 MJ/t steel) should come from renewable sources to avoid further emissions. Within this framework, a renewable facility working continuously of 417 MW_e is required to satisfy this electricity demand.

Regarding thermal energy consumption (Table 3), the largest consumer is still the blast furnace (60.3% of the total needs). Its energy consumption increased by 9.4% due to oxy-fuel combustion. However, the coke oven consumption decreased by 11.6% due to the reduction of fossil fuel input. In the air heating furnace, we had to heat CO_2 for the oxy-combustion instead of air, resulting in a slight reduction of the thermal energy consumption.

In this integration, BFG was used in top gas recycling and methanation, and therefore the percentage of utilization of fuel gases by type of process remarkably changed (Table 4). Here, only 35.7% of the energy content of these gases was used in the internal processes of ironmaking and 21.4% in the power plant (Figure 5). The remaining was mostly recirculated to the blast furnace (36.1%), and a small fraction was diverted to methanation (4.7%).

Regarding CO_2, the BF was still the larger emitting source, producing 1255 kg/t steel. In total, the CO_2 emissions were 1582 kg/t steel, which was 8% less than in the reference case (Case 0, Figure 6). Thus, 136 kg CO_2/t steel were avoided by consuming 5079 MJ/t steel additional electrical energy, and a saving of 3.34 MJ/kg CO_2 by means of coke reduction was achieved, which means a CO_2 avoidance penalization of 34 MJ/kg

CO_2. Comparing this penalization with those in other processes, such as power-to-syngas (4.8–10.8 MJ/kg CO_2 [11]) and amine scrubbing (3–4 MJ/kg CO_2 [25,26]), indicates that Case 1 configuration does not present any energy advantage.

4.3. Case 2: Methanation of COG Integration in Ironmaking with Oxy-Fuel Combustion and TGR

In this case, the ironmaking process worked under oxy-fuel regime with top gas recycling as in Case 1. However, here, the H_2 source for the methanation process was the coke oven gas instead of pure H_2.

The total electrical consumption of this plant was 1382 MJ/t steel. This was well below Case 1 (77% lower) since electrolysis was no longer used, but still above Case 0 (58% higher) because of the gas compression in the methanation process and the production of O_2 for the oxy-fuel blast furnace. Moreover, since COG was here used in methanation, the power plant only produced 652 MJ/t steel (47% of the total electricity consumption, i.e., not self-sufficient). To supply the missing electricity, we required a renewable facility of 65 MW_e working continuously, assuming a steel production of 7.7 kt/day. Regarding thermal energy consumption, the requirements are the same than those of Case 1 (Table 3).

In terms of gas utilization (Table 4), the COG was used entirely in methanation instead of in internal plant processes. For this reason, 43.6% of the BFG had to be allocated to this end. The BOFG was also used in the internal processes of the plant (as in the two previous cases). With this implementation, 36.8% of the energy from these gases was used in the internal processes, 4.5% in the power plant, 22.6% in methanation, and 36.1% in top gas recycling (Figure 5).

Regarding emissions, the CO_2 that was avoided remained the same as for Case 1 (136 kg CO_2/t steel) because the same amount of methane was produced, and therefore the amount of CO_2 that was recycled in closed loop did not change. Then, total emissions were 1582 kg/t steel (the BF accounted for 1405 kg CO_2/t steel, while the coke oven barely emitted CO_2 because COG was used in methanation). Since the electricity consumption increased by 1116 MJ/t steel, the CO_2 avoidance penalization was 4.9 MJ/kg CO_2. This penalization is in the range of other processes such as power-to-syngas or amine scrubbing, and therefore is energetically competitive.

4.4. Discussion

Figure 7 depicts a Sankey diagram of the energetic gases of the steel industry for the three scenarios: Case 0, Case 1, and Case 2. It can be seen that the energy flow to the power plant was increasingly reduced for each case, thus explaining why a renewable facility is needed. The internal energy use increased in Cases 1 and 2 due to the blocks that were added to the diagram (e.g., CH_4 heating). In the methanation section, the same energy was consumed in both Cases 1 and 2, and therefore the main difference was the H_2 source, either an electrolyser or the COG. The TGR was not changed in the two integrations, obtaining the energy from the BFG.

Although integrating oxy-fuel combustion in the BF is an interesting option in terms of CO_2 mitigation, the technology is not commercial yet (current TRL is 6–7) [27]. Thus far, Zuo and Hirsch [28] reported experimental results from a 9 m^3 TGR-BF, combined with a vacuum pressure swing adsorption carbon capture method for removing CO_2 of the top gas. They found 24% savings in carbon consumption and 76% reduction in CO_2 emissions when assuming underground storage of the corresponding captured CO_2 [29]. On average, the carbon input decreased from 470 kg/t pig iron to 350 kg/t pig iron [27]. It is worth mentioning that oxy-fuel combustion is already applied commercially in secondary processes in ironmaking plants, such as during the preheating of ladles and converter, or during the steel reheating and heat treatment. Since the oxy-fuel technology is familiar to the industry, its adoption in BFs is a reasonable option [11]. In fact, the topic is being studied widely in the literature to solve remaining technical issues related to the smoothness of operation (non-linear behavior of the feedback induced by the top gas recycle) [30].

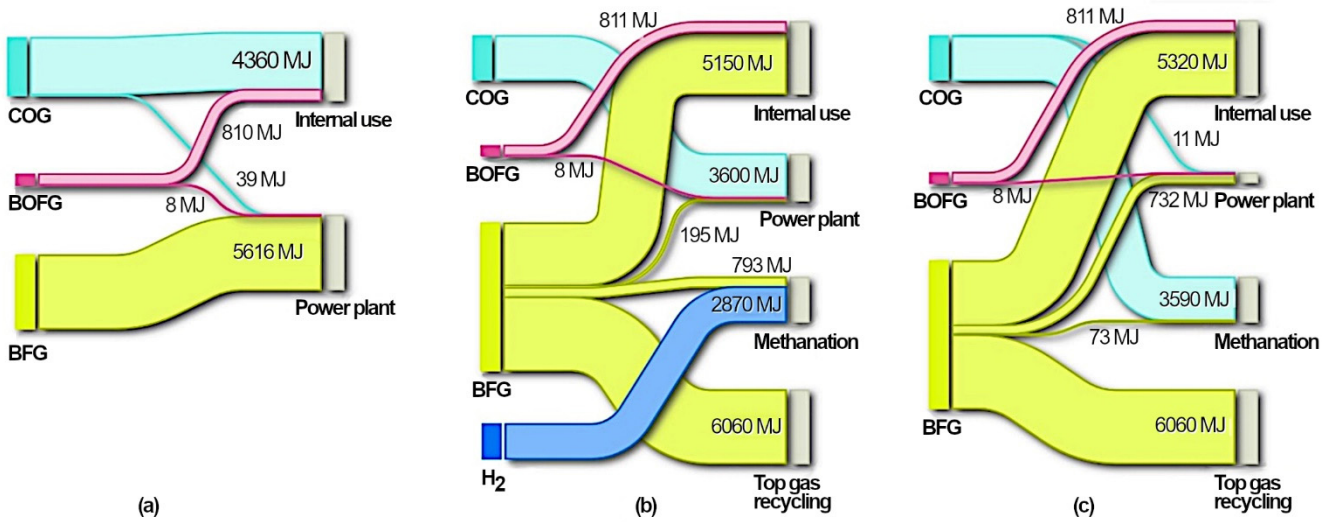

Figure 7. Sankey diagram of the change in the energy utilization inside the ironmaking plant of the energetic gases COG, BOFG, and BFG: (**a**) Case 0, (**b**) Case 1, and (**c**) Case 2.

5. Conclusions

A novel concept integrating power-to-gas technology in the ironmaking process, together with oxy-fuel combustion and top gas recycling, was presented. Two integration options were analyzed, differing in the source of H_2 for the methanation process (H_2 from water electrolysis, Case 1, or syngas from the coke oven, Case 2). In both cases, synthetic natural gas from methanation was injected into the blast furnace to reduce the coke consumption, thus recycling CO_2 in a closed loop. The power-to-gas plant was sized to reduce the coke content by 50 kg/t steel. Both Cases 1 and 2 were compared with a conventional ironmaking process (Case 0).

The base case simulation included the sintering process, coke oven, hot stoves, blast furnace, air separation unit, basic oxygen furnace, casting, and power plant. For the power-to-gas (PtG) integrations, an electrolyser (only in Case 1) and methanation plant were added to the simulation, and the blast furnace was run under oxy-fuel conditions with top gas recycling. Mass flows, compositions, and thermal and electricity consumptions were calculated through mass and energy balances.

Savings in CO_2 emissions with either of the two PtG implementations were 8%, with a reduction in coal fuel of 12.8%. The energy required to avoid these emissions was 34 MJ/kg CO_2 for Case 1 and 4.9 MJ/kg CO_2 for Case 2. This remarkable difference was because the first PtG integration required a 431.9 MW electrolyser to produce the H_2, while the second used the H_2 content of coke oven gas (COG) and therefore an electrolyser was not needed. Under this framework, the only competitive option is Case 2, whose energy penalization is in the range of conventional amine carbon capture [31]. Moreover, it has the advantage of reducing the fuel consumption and reducing geological storage, which are additional benefits regarding economic costs compared to conventional carbon capture and storage.

The energy content of the gases generated in the industry (COG, BFG, and BOFG) are normally used in internal processes, but mainly in the production of electricity. The implementation of the PtG implies a greater consumption of these gases in the internal processes of the plant, as well as in the methanation and recirculation processes. This means that only a small percentage of the gases are diverted to the thermal power plant, making necessary a renewable facility to fulfil the electricity demand (in Case 1 and Case 2, the plant is no longer self-sufficient). Case 1 requires a renewable-based power production 5.2 times larger than Case 2 (417 MW vs 65 MW), due to electrolysis.

This study shows good technical prospects for the future in terms of reducing steel-making industry emissions. An economic analysis of the proposed alternative processes will be performed in future work.

Author Contributions: Conceptualization, J.P., M.B., L.M.R. and B.P.; methodology, J.P. and M.B.; model, J.P. and M.B.; validation, J.P. and M.B.; formal analysis, J.P.; writing—original draft preparation, J.P. and M.B.; writing—review and editing, V.E.; visualization, J.P. and M.B.; supervision, M.B., L.M.R., B.P. and V.E.; project administration, M.B., L.M.R., B.P. and V.E.; funding acquisition, M.B., L.M.R. and V.E. All authors have read and agreed to the published version of the manuscript.

Funding: The work described in this paper has been supported by both the University of Zaragoza under the project UZ2020-TEC-06 and Khalifa University project CIRA-2020-080. This work has also received funding from the European Union's Horizon 2020 research and innovation program under the Marie Sklodowska-Curie grant agreement no. 887077.

Institutional Review Board Statement: Not applicable.

Informed Consent Statement: Not applicable.

Data Availability Statement: Not applicable.

Conflicts of Interest: The authors declare no conflict of interest.

Abbreviations

ASU	air separation unit
BAT	best available technology
BF	blast furnace
BFG	blast furnace gas
BOF	basic oxygen furnace
BOFG	basic oxygen furnace gas
CDQ	coke dry quenching
CO	coke oven
COG	coke oven gas
PtG	power-to-gas
SNG	synthetic natural gas
TGR	top gas recycling

Appendix A. Stream Data

Table 1. Specific heat, mass flows, and temperatures for Cases 0, 1 and 2.

Stream	cp	m	T	Stream	cp	m	T	Stream	cp	m	T
	(kJ/kg.K)	(kg/kgsteel)	(°C)		(kJ/kg.K)	(kg/kgsteel)	(°C)		(kJ/kg.K)	(kg/kgsteel)	(°C)
1	0.473	1.426	25	**49**	0.907	0.085	25	**180**	4.18	0.08955	25
2	0.835	0.0713	25	**101**	0.473	1.426	25	**181**	4.18	0.2414	25
3	0.473	1.426	800	**102**	0.835	0.0713	25	**182**	14.34	0.02701	25
4	0.473	1.426	150	**103**	0.473	1.426	800	**183**	0.914	0.2144	25
5	1.005	0.6232	25	**104**	0.473	1.426	150	**184**	2.239	0.06506	25
6	1.126	0.6232	650	**105**	1.005	0.6232	25	**185**	4.18	0.1016	25
7	1.126	0.4762	650	**106**	1.126	0.6232	650	**186**	4.18	2.665	25
8	1.126	0.147	650	**107**	1.126	0.4762	650	**187**	4.18	2.665	80
9	1.426	0.08527	25	**108**	1.126	0.147	650	**190**	1.005	0.7772	25
10	1.012	0.2374	500	**109**	1.426	0.08527	25	**191**	1.038	0.5938	25
11	0.835	0.5238	25	**110**	1.012	0.2374	500	**192**	0.914	0.1803	25
12	0.836	0.4191	1100	**111**	0.835	0.4568	25	**193**	0.914	0.3947	25
13	0.836	0.4191	150	**112**	0.836	0.3654	1100	**194**	0.914	0.08873	25
14	9.035	0.1048	1350	**113**	0.836	0.3654	150	**195**	1.179	0.08873	1650
15	1.005	0.668	25	**114**	9.035	0.09136	1350	**196**	1.117	0.04026	25
16	9.035	0.04969	25	**115**	1.005	0.4562	25	**197**	1.005	0.05914	25
17	1.012	0.7408	500	**116**	1.117	0.3105	25	**198**	1.012	0.104	600
18	1.038	0.3646	25	**117**	1.012	0.8021	500	**200**	0.907	0.085	25
19	1.178	0.3646	800	**118**	1.038	0.318	25	**201**	0.749	0.085	1650
20	1.005	1.278	25	**119**	1.178	0.318	800	**202**	1.005	0.06183	25
21	1.208	1.278	1200	**130**	0.914	0.3059	25	**203**	1.154	0.06183	800
22	9.035	0.05062	25	**131**	1.142	0.3059	1200	**204**	0.749	0.085	460
23	1.005	0.6805	25	**132**	0.842	0.5324	25	**205**	1.426	0.1346	1650
24	1.012	0.7547	300	**133**	1.323	0.5324	1200	**206**	0.5	1	1650

Table 1. *Cont.*

Stream	cp	m	T	Stream	cp	m	T	Stream	cp	m	T
25	0.907	0.283	25	**134**	1.117	0.4782	25	**207**	1.412	0.04795	25
26	1.412	2.084	200	**135**	1.005	0.7025	25	**208**	1.005	0.08269	25
27	0.749	0.283	1200	**136**	1.012	1.235	600	**209**	1.012	0.1335	850
28	0.749	0.283	460	**137**	1.037	0.53	25	**210**	0.5	1	25
29	1.005	0.1754	25	**138**	1.254	0.53	1200	**334**	1.412	0.4782	25
30	1.154	0.1754	800	**140**	2.239	0.06506	25	**335**	1.005	0.7025	25
31	0.48	1.039	1200	**141**	5.632	0.06506	1200	**336**	1.012	1.235	600
32	1.005	0.3825	25	**142**	1.117	0.1019	25	**342**	1.412	0.1019	25
33	0.914	0.08873	25	**143**	1.005	0.1498	25	**343**	1.005	0.1498	25
34	1.038	0.2922	25	**144**	1.012	0.2633	600	**344**	1.012	0.2633	600
35	1.179	0.08873	1650	**150**	0.907	0.283	25	**374**	1.412	0.01384	25
36	1.005	0.07301	25	**151**	0.749	0.283	1200	**376**	1.098	1.059	25
37	9.035	0.00543	25	**152**	0.749	0.283	460	**382**	9.035	0.09106	25
38	1.012	0.08096	600	**153**	1.005	0.1754	25	**385**	4.18	0.00883	25
39	1.426	0.1346	1650	**154**	1.154	0.1754	800	**386**	4.18	0.8714	25
40	0.749	0.085	1650	**155**	0.48	1.039	1200	**387**	4.18	0.8714	80
41	0.749	0.085	460	**156**	1.117	2.186	200	**390**	1.005	1.701	25
42	1.005	0.0847	25	**157**	1.098	2.136	25	**391**	1.038	1.3	25
43	1.154	0.0847	800	**158**	4.18	0.05031	25	**392**	0.914	0.3947	25
44	0.5	1	1650	**159**	4.18	2.352	25	**396**	1.412	0.04026	25
45	0.5	1	25	**160**	4.18	2.352	80	**397**	1.005	0.05914	25
46	1.426	0.04795	25	**174**	1.098	0.1389	25	**398**	1.012	0.104	600
47	1.005	0.08269	25	**175**	1.098	1.062	25				
48	1.012	0.1335	850	**176**	1.098	0.9343	25				

References

1. Huitu, K.; Helle, H.; Helle, M.; Kekkonen, M.; Saxén, H. Optimization of steelmaking using fastmet direct reduced iron in the blast furnace. *ISIJ Int.* **2013**, *53*, 2038–2046. [CrossRef]
2. Quader, M.A.; Ahmed, S.; Ghazilla, R.A.R.; Ahmed, S.; Dahari, M. A comprehensive review on energy efficient CO_2 breakthrough technologies for sustainable green iron and steel manufacturing. *Renew. Sustain. Energy Rev.* **2015**, *50*, 594–614. [CrossRef]
3. He, K.; Wang, L. A review of energy use and energy-efficient technologies for the iron and steel industry. *Renew. Sustain. Energy Rev.* **2017**, *70*, 1022–1039. [CrossRef]
4. Ariyama, T.; Takahashi, K.; Kawashiri, Y.; Nouchi, T. Diversification of the Ironmaking Process Toward the Long-Term Global Goal for Carbon Dioxide Mitigation. *J. Sustain. Metall.* **2019**, *5*, 276–294. [CrossRef]
5. Lisbona, P.; Bailera, M.; Peña, B.; Romeo, L.M. Integration of CO_2 capture and conversion. In *Advances in Carbon Capture*; Rahimpour, M.R., Farsi, M., Makarem, M.A., Eds.; Woodhead Publishing: Cambridge, UK, 2020; pp. 503–522. ISBN 9780128196571.
6. Gao, J.; Wang, Y.; Ping, Y.; Hu, D.; Xu, G.; Gu, F.; Su, F. A thermodynamic analysis of methanation reactions of carbon oxides for the production of synthetic natural gas. *RSC Adv.* **2012**, *2*, 2358–2368. [CrossRef]
7. Bailera, M.; Lisbona, P.; Romeo, L.M. Power to gas-oxyfuel boiler hybrid systems. *Int. J. Hydrog. Energy* **2015**, *40*, 10168–10175. [CrossRef]
8. Romeo, L.M.; Bailera, M. Design configurations to achieve an effective CO_2 use and mitigation through power to gas. *J. CO_2 Util.* **2020**, *39*, 1–10. [CrossRef]
9. Bailera, M.; Hanak, D.P.; Lisbona, P.; Romeo, L.M. Techno-economic feasibility of power to gas–oxy-fuel boiler hybrid system under uncertainty. *Int. J. Hydrog. Energy* **2019**, *4*, 9505–9516. [CrossRef]
10. Eveloy, V. Hybridization of solid oxide electrolysis-based power-to-methane with oxyfuel combustion and carbon dioxide utilization for energy storage. *Renew. Sustain. Energy Rev.* **2019**, *108*, 550–571. [CrossRef]
11. Bailera, M.; Lisbona, P.; Peña, B.; Romeo, L.M. A review on CO_2 mitigation in the Iron and Steel industry through Power to X processes. *J. CO_2 Util.* **2021**, *46*, 101456. [CrossRef]
12. Kirschen, M.; Risonarta, V.; Pfeifer, H. Energy efficiency and the influence of gas burners to the energy related carbon dioxide emissions of electric arc furnaces in steel industry. *Energy* **2009**, *34*, 1065–1072. [CrossRef]
13. Rosenfeld, D.C.; Böhm, H.; Lindorfer, J.; Lehner, M. Scenario analysis of implementing a power-to-gas and biomass gasification system in an integrated steel plant: A techno-economic and environmental study. *Renew. Energy* **2020**, *147*, 1511–1524. [CrossRef]
14. Steelmaking Technologies. CISDI Ingeniering CO. LTD. Available online: http://www.cisdigroup.com/4-steelmaking.html (accessed on 15 September 2021).
15. He, H.; Guan, H.; Zhu, X.; Lee, H. Assessment on the energy flow and carbon emissions of integrated steelmaking plants. *Energy Rep.* **2017**, *3*, 29–36. [CrossRef]
16. Wu, J.; Wang, R.; Pu, G.; Qi, H. Integrated assessment of exergy, energy and carbon dioxide emissions in an iron and steel industrial network. *Appl. Energy* **2016**, *183*, 430–444. [CrossRef]
17. Geerdes, M.; Chaigneau, R.; Lingiardi, O.; Molenaar, R.; van Opbergen, R.; Sha, Y.; Warren, P. *Modern Blast Furnace Ironmaking an Introduction*; IOS Press: Amsterdam, The Netherlands, 2020; ISBN 978-1-64368-123-8.

18. Ariyama, T.; Sato, M.; Nouchi, T.; Takahashi, K. Evolution of blast furnace process toward reductant flexibility and carbon dioxide mitigation in steel works. *ISIJ Int.* **2016**, *56*, 1681–1696. [CrossRef]
19. Fisher, L.V.; Barron, A.R. The recycling and reuse of steelmaking slags—A review. *Resour. Conserv. Recycl.* **2019**, *146*, 244–255. [CrossRef]
20. Darde, A.; Prabhakar, R.; Tranier, J.P.; Perrin, N. Air separation and flue gas compression and purification units for oxy-coal combustion systems. *Energy Procedia* **2009**, *1*, 527–534. [CrossRef]
21. Rönsch, S.; Schneider, J.; Matthischke, S.; Schlüter, M.; Götz, M.; Lefebvre, J.; Prabhakaran, P.; Bajohr, S. Review on methanation—From fundamentals to current projects. *Fuel* **2016**, *166*, 276–296. [CrossRef]
22. Biswas, A.K. *Principles of Blast Furnace Ironmaking. Theory and Practice*; Cootha Publishing House: Brisbane, Australia, 1981.
23. IAE—Iron & Steel Roadmap. 2020. Available online: https://www.iea.org/reports/iron-and-steel-technology-roadmap (accessed on 24 October 2021).
24. ITM Power to study feasibility of 100 MW P2G energy storage. *Fuel Cells Bull.* **2018**, *2018*, 11. [CrossRef]
25. Arasto, A.; Tsupari, E.; Kärki, J.; Pisilä, E.; Sorsamäki, L. Post-combustion capture of CO_2 at an integrated steel mill—Part I: Technical concept analysis. *Int. J. Greenh. Gas Control* **2013**, *16*, 271–277. [CrossRef]
26. Tobiesen, F.A.; Svendsen, H.F.; Mejdell, T. Modeling of blast furnace CO_2 capture using amine absorbents. *Ind. Eng. Chem. Res.* **2007**, *46*, 7811–7819. [CrossRef]
27. Keys, A.; van Hout, M.; Daniels, B. *Decarbonisation Options for the Dutch Steel Industry*; PBL Netherlands Environmental Assessment Agency: The Hague, The Netherlands, 2019.
28. Zuo, G.; Hirsch, A. The trial of the Top Gas Recycling Blast Furnace at LKAB's EBF and Scale-Up. *Rev. Métallurgie* **2009**, *2*, 255. [CrossRef]
29. Danloy, G.; Berthelemot, A.; Grant, M.; Borlée, J.; Sert, D.; van der Stel, J.; Jak, H.; Dimastromatteo, V.; Hallin, M.; Eklund, N.; et al. ULCOS—Pilot testing of the low-CO_2 Blast Furnace process at the experimental BF in Lulea. *Rev. Metall. Cah. D'Inform. Technol.* **2009**, *106*, 1–8. [CrossRef]
30. Zhang, W.; Dai, J.; Li, C.; Yu, X.; Xue, Z.; Saxén, H. A Review on Explorations of the Oxygen Blast Furnace Process. *Steel Res. Int.* **2021**, *92*, 202000326. [CrossRef]
31. Bailera, M.; Lisbona, P.; Peña, B.; Romeo, L.M. *Energy Storage*; Springer International Publishing: Cham, Switzerland, 2020; ISBN 978-3-030-46526-1.