energies

MDPI

Article

Study of Energy Consumption of a Bucket Conveyor in a Jig Concentrator Plant in a Hard Coal Mine

Sebastian Jendrysik [1], Sławomir Bartoszek [1], Dominik Bałaga [1], Gabriel Kost [2,*] and Agnieszka Sękala [2]

[1] KOMAG Institute of Mining Technology, Pszczyńska 37, 44-100 Gliwice, Poland; sjendrysik@komag.eu (S.J.); sbartoszek@komag.eu (S.B.); dbalaga@komag.eu (D.B.)
[2] Department of Mechanical Engineering, Silesian University of Technology, Konarskiego 18A, 44-100 Gliwice, Poland; agnieszka.sekala@polsl.pl
* Correspondence: Gabriel.Kost@polsl.pl

Abstract: The subject of the discussion is oriented toward limiting the energy consumption of the bucket conveyor used in jig concentrator plants by controlling its speed. A method of predictive control of the bucket conveyor speed is presented. It allows for reducing the energy consumption due to appropriate selection of bucket movement speed to ensure the nominal filling of buckets along the entire length of the conveyor. This approach enables limiting the idling speed of the conveyor, extend its life, and also reduce the electricity consumption of the entire system. Experimental studies, carried out at the "Sośnica" Coal Mine working facility, confirmed that the use of a predictive algorithm for controlling the bucket conveyor speed and adapting the bucket speed to the current load decreased in energy consumption n by 9.6%, with 80% of the filling conveyor.

Keywords: energy consumption; bucket conveyor; control; coal mine

check for updates

Citation: Jendrysik, S.; Bartoszek, S.; Bałaga, D.; Kost, G.; Sękala, A. Study of Energy Consumption of a Bucket Conveyor in a Jig Concentrator Plant in a Hard Coal Mine. *Energies* **2021**, *14*, 5706. https://doi.org/10.3390/en14185706

Academic Editor: Maxim Tyulenev

Received: 4 August 2021
Accepted: 3 September 2021
Published: 10 September 2021

Publisher's Note: MDPI stays neutral with regard to jurisdictional claims in published maps and institutional affiliations.

Copyright: © 2021 by the authors. Licensee MDPI, Basel, Switzerland. This article is an open access article distributed under the terms and conditions of the Creative Commons Attribution (CC BY) license (https://creativecommons.org/licenses/by/4.0/).

1. Introduction

Reducing electricity consumption, not only in the industrial sector [1,2], but also in mining significantly reduces production costs, and consequently the profit of the company and its competitiveness. In hard coal mining, the availability and efficiency of mining and processing machines are of fundamental importance as they directly affect the mine production capacity. Rational use of electricity and extending the life of machines can reduce mining costs, which in turn translates into the profitability of mines and their competitiveness on the market. Therefore, mining companies are determined to improve the efficiency of their transport machinery and equipment in the scope not only of their capacity in relation to mining, but also in the scope of effective use of transport machinery and equipment. Issues related to the energy demand of transport equipment, especially lifting mechanisms, in the context of energy saving, are the subject of research and tests conducted by many authors. Bucket conveyors are efficient machines to transport the dry materials under large elevation angles. In [3], the authors made a complete mechanical description of a bucket conveyor. The authors in [4] developed a method of the influence of a lifting height and weight of the lifted load on the drive overload and duty cycle power consumption. In [5], they presented a model of a crane that enabled the identification of dynamic factors caused by lifting the load off the ground. The dynamic forces and energy consumption of payload lifting were defined using simulation tests on an experimentally verified model. Energy efficiency was also analyzed as a key indicator in the design and the operation phase of a lifting mechanism including conveyors. In [6], the authors presented new approaches to strength and optimization estimates according to the operational criteria for mining machines. In the mining industry, bucket conveyors are used primarily for the transport and drainage of waste products and semi-finished products in the coal enrichment process from pulsating jigs (Figure 1) [7,8]. The influence of the pulsation

cycle for the parameters of the flow of water and the layers of the bed are among the most important parameters in the preparation process of the jig [9,10].

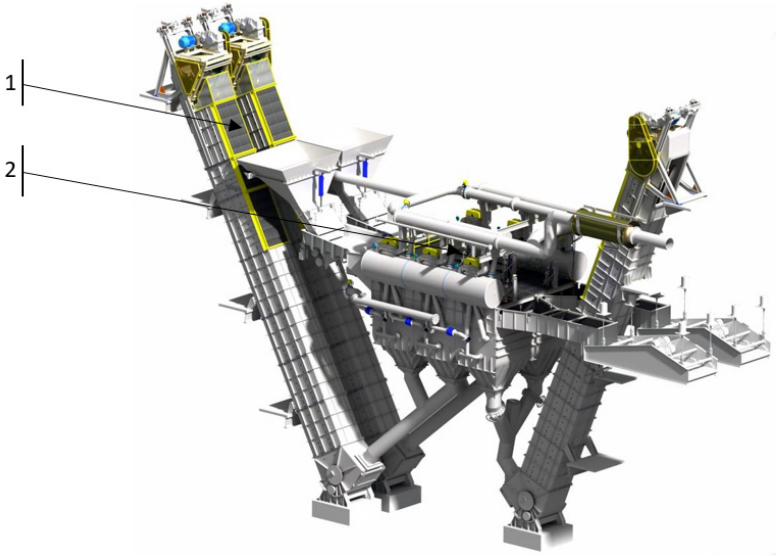

Figure 1. Pulsating jig: 1—bucket conveyor, 2—jig.

In these conveyors, the material is transported—at large elevation angles—in specific quantities that directly depend on the volume of the installed buckets [11]. One of the characteristic features of the bucket conveyor, working as a part of the jig unit, is a variability of its load, resulting from the variability of the gravimetric composition of the enriched material (spoil) [12]. In the event of an increase in the amount of material fed onto the conveyor, the speed should always be increased immediately, in order to adapt to new loading conditions and to prevent excessive material accumulation in its loading zone. Material, accumulated in this zone, may cause emergency stopping of the conveyor, which will consequently stop the entire jig concentrator plant. Currently, the majority of bucket conveyors, used in the mining industry, work at a constant speed or at a speed manually controlled by the operator [13,14]. However, attempts have been made to automate the conveyor operation control process by using the echo sounder signal located above the moving buckets [8,15]. However, the disadvantage of this solution is that in the event of a rapid increase in the amount of bottom material directed to the conveyor, the conveyor may become blocked due to overfilling [16]. As the conveyors operate in a water environment up to half of their height, the echo sounder is mounted at a considerable distance from the loading zone [17,18]. Therefore, the signal sent from the echo sounder does not contain information about the amount of material in this zone, and its excess is the most common reason for blocking the conveyor. It is therefore necessary to develop a method of controlling the conveyor that would allow for it to be adapted to the flow rate of the product—rock material from the jig [19,20]—and thus ensure continuity of operation by preventing overfilling of the buckets and ensure optimal use of conveyor feed energy [21]. Electricity consumption is most effective when the conveyor is operated at a nominal load [22]. On one hand, such a solution can reduce electricity consumption, and on the other hand, extend the life of the conveyors (wear of components depends on the travel speed and working time).

2. Research and Methods of Process Parameters Identification

The subject of analysis was the "Komag" bucket conveyor used in the "Sośnica" Coal Mine in Gliwice, Poland, the diagram of which is shown in Figure 2.

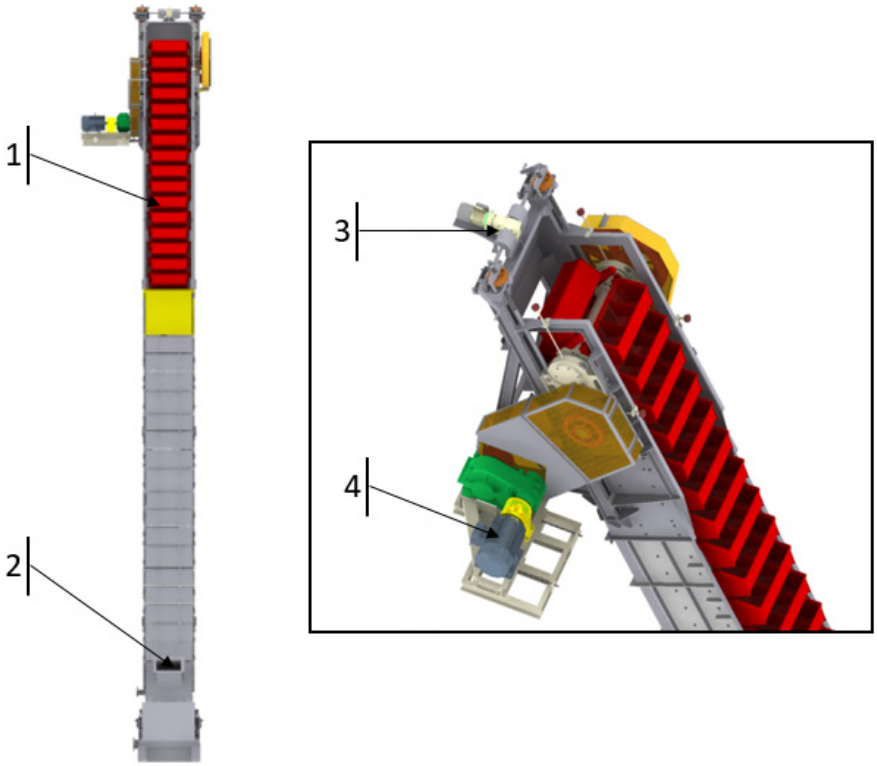

Figure 2. Diagram of the "Komag" bucket conveyor: 1—chain with buckets, 2—material loading zone, 3—material dumping zone, 4—drive.

To determine the theoretical capacity of the bucket conveyor, the following equation should be used [8]:

$$Q_t = 3.6 \cdot \frac{V}{a} \cdot \gamma \cdot v \cdot \Psi \ (\mathrm{kg/s}), \tag{1}$$

where

V—bucket capacity (m^3);
a—bucket spacing (m);
γ—bulk density of transported material (kg/m^3);
v—linear velocity of buckets movement (m/s); and
Ψ—bucket filling coefficient (0–1).

The capacity of the bucket conveyor working in jig concentrator plants depends on the linear speed of the bucket movement, among other things. Two rated speeds are most commonly used: 0.2 m/s and 0.28 m/s, respectively. Each change in the rotational speed of the motor driving the conveyor translates into an immediate change in the speed of movement of the buckets transporting the material. At a constant stream of the output product from the jig, it will immediately change the amount of material on the conveyor.

In reality, the filling of the bucket conveyor (weight of material) $y_1(t)$ depends on both its speed $u_2(t)$ and the flow rate of the product removed from the jig. A change in the product flow rate is the main disturbance that affects the weight of material currently on the conveyor. The measurement of the opening of the jig flap $u_1(t)$ will identify this disturbance, and the control system, actively correcting the conveyor speed, will maintain a constant weight of material on the conveyor. Due to the fact that the material discharged from the jig is fed to the conveyor with a certain delay, the calculations take into account the shift of the output signal in relation to the input signal by the time needed to cover this path. This time was determined when the jig was stopped, measuring the time from the change in the opening of the discharge slot to the moment when the material appeared in the loading zone of the conveyor. In the paper, we decided to use a predictive automatic

control system and search for the MISO (multi input single output) process model, the structure of which is shown in Figure 3.

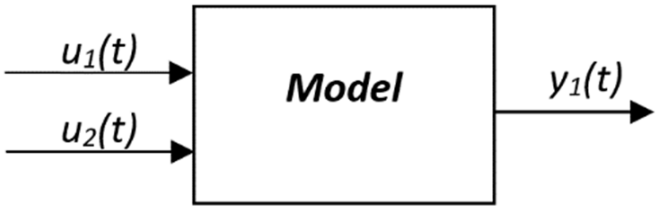

Figure 3. Diagram of the block structure of the process model. where: $u_1(t)$—degree of opening of the jig discharge slot (%); $u_2(t)$—linear speed of moving conveyor buckets (m/s); and $y_1(t)$–weight of the material on the conveyor (kg).

In order to obtain information about the object of control, measurement experiments were carried out using a working industrial object, enabling the registration of the following parameters: degree of opening of the discharge slots in two compartments of the jig, linear speed of moving conveyor buckets, and power absorbed from the power grid by the conveyor drive. Additionally, in order to determine the degree of the conveyor filling on the basis of the power absorbed from the power grid, the power consumed by the conveyor motor in the time intervals when the conveyor operated without any load in the full speed range was also registered.

Tests identifying these parameters were carried out in two stages. In the first stage, the opening of the jig discharge slots $u_1(t)$ was changed and the load of the conveyor operating at a constant speed $u_2(t)$ = const. was recorded. The second stage of the tests aimed at changing the conveyor speed $u_2(t)$ at the constant opening of the jig discharge slots at the frequency of 0.5 Hz, in the range $u_2(t)$ ϵ (0.12–0.20 m/s). The conveyor load was recorded in the form of electrical power consumed by the motor from the power grid, which was converted into the weight of the material on the conveyor $y_1(t)$. Throughout the entire recording of parameters, the jig was fed with a capacity of about 125 kg/s.

It was assumed that the time delay of the output signal, which was determined by measuring the time from the moment of opening the jig discharge slot until the appearance of material in the loading zone of the conveyor, is constant and amounts to n_k = 16 s. Figure 4a–c shows the waveforms of input and output variables used for the process of identifying the object parameters [22].

The Pearson linear correlation coefficient of input and output variables $u_1(t)$, $u_2(t)$, and $y_1(t)$ are summarized in Table 1.

Table 1. Correlation coefficients of variables $u_1(t)$, $u_2(t)$, $y_1(t)$ [22].

Parameter	$u_1(t)$	$u_2(t)$
$y_1(t)$	0.1366	−0.0592

The initial tests also determined the conveyor energy performance (i.e., the dependence of energy consumption on the conveyor load), which is shown in Figure 5.

The load (loading) of the conveyor w is expressed as a percentage based on visual assessment w = 0%-empty buckets (y_1 = 0 kg), w = 100%-buckets fully filled (y_1 = 4400 kg-conveyor nominal capacity).

The simple regression equation $e_p = f(w)$ takes the form [22]:

$$e_p = 0.394w + 8.6 \quad (2)$$

The monitoring of the bucket conveyor's energy consumption was carried out on different days and at different times. Ten measurement groups were registered, Δt = 3600 s each. During the tests, the degree of opening of the jig discharge slots u_1 and electric energy

E_p taken by the conveyor motor from the power grid were measured, at a constant rated motor speed. On the basis of the obtained results, the average and maximum electricity consumption values were determined and are summarized in Table 2.

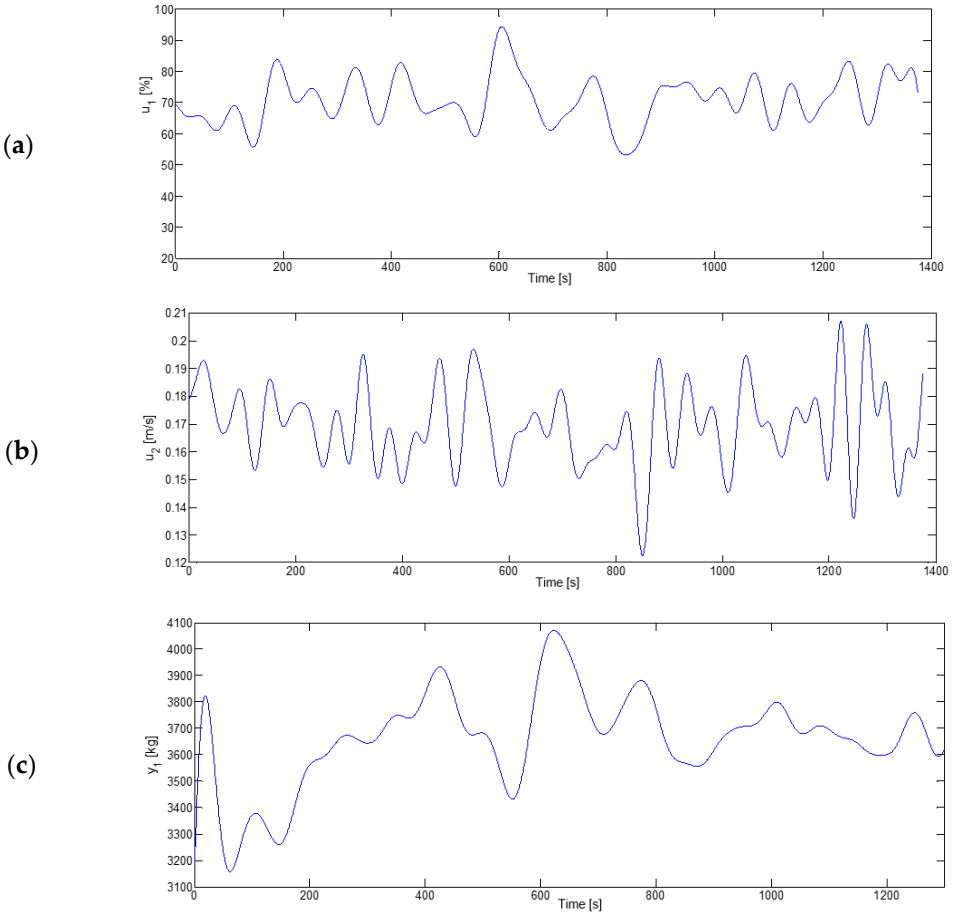

Figure 4. Input/output waveforms used for the identification process: (**a**) Opening degree of discharge slots. (**b**) Bucket conveyor speed graph. (**c**) Weight of material on the conveyor.

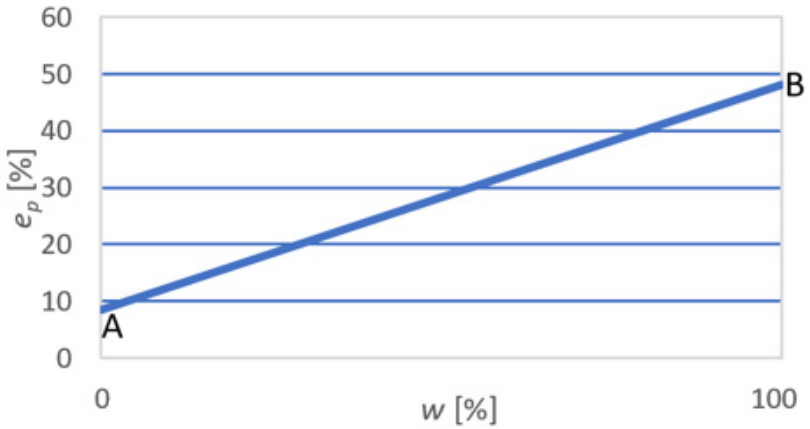

Figure 5. Energy performance of the bucket conveyor [22]. where: e_p—percentage energy consumption; w—percentage load on the conveyor; A—energy consumption during no-load operation; and B—energy consumption when operating at full load.

Table 2. Energy consumption and conveyor load divided into individual tests.

No.	e_{sr} (%)	e_{max} (%)	w_{sr} (%)	w_{max} (%)
1	28.42	39.11	50.31	77.44
2	29.40	43.68	52.78	89.04
3	27.60	35.36	48.22	67.92
4	28.66	39.77	50.91	79.11
5	29.39	38.63	52.76	76.23
6	30.05	36.09	54.45	69.76
7	28.07	33.19	49.41	62.41
8	29.04	38.33	51.87	75.45
9	28.03	32.40	49.32	60.40
10	30.32	43.02	55.12	87.35

The average value of the bucket conveyor load in the period under consideration was 51.51%, while the average value of energy consumption at the same time was 29.9%.

3. Predictive Bucket Conveyor Speed Control System-Experimental Tests

The task of the proposed bucket conveyor control system is to stabilize its filling at the level of the set value and guarantee the continuity of its operation (preventing the conveyor from being overfilled). The created control system was implemented in the same bucket conveyor on which measurement tests were carried out for the identification of the process parameters. The waste material was discharged from two working compartments of the jig. In addition, two sensors were connected to the controller, measuring the degree of opening the jig discharge slots, and the operator's panel was installed to visualize the processes. The structure of the conveyor speed control system is shown in Figure 6.

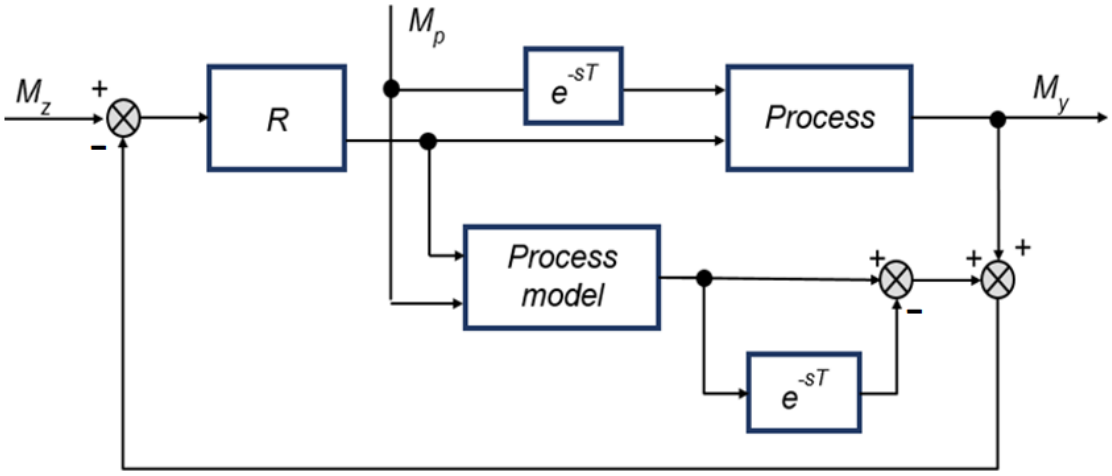

Figure 6. Control system diagram [22]: M_z—set value of the transported product weight (kg), M_p—sum of degrees of opening the discharge flaps in the jig (%), M_y—current weight of transported heavy product (kg).

During start-up operations, in order to guarantee continuity of work and prevent the overfilling of the conveyor, threshold opening values of the jig discharge slots were declared. If the sum of opening the discharge slots (feeding the conveyor) in both compartments exceeded 120%, or the opening of the discharge slot on one of the compartments exceeded 70%, the algorithm set the maximum conveyor speed. However, if the opening of the discharge slots in both compartments was less than 5%, the control system algorithm set the minimum conveyor speed. In other cases, the speed control was carried out using the predictive control system. The control system allowed for switching to manual control (the conveyor speed set point determined by the operator).

As part of the research experiment, whose basic task was to analyze the operation of the control method in the industrial conditions of the bucket conveyor, the power of

the conveyor operating in the manual mode for 30 min at a constant speed, and then for 30 min, the power and speed of the conveyor working with the automatic regulation system on were recorded. When recording both characteristics, the jig was fed at a capacity of 125 kg/s. In order to compare the results of the quality control of the material weight on the conveyor, its distributions were compiled when the conveyor was operated without the speed mode control and in the speed-controlled mode. Figure 7 presents a graph of the distribution of the material weight change on the conveyor, while the mean values and standard deviations of the waveforms are presented in Table 3.

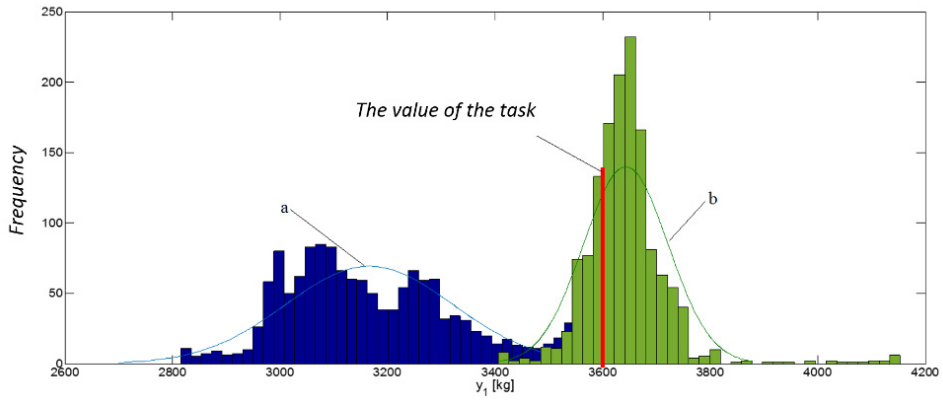

Figure 7. Distribution of the change in the material weight of the bucket conveyor: (a) without speed control, (b) with speed control [22].

Table 3. Weight of material on the conveyor without and with the control system [22].

Variant	Without Speed Control	With Speed Control
Average Value (kg)	3166.01	3642.95
Deviation (kg)	155.533	78.58

Energy Consumption Analysis of the Conveyor Drive System

During the experimental tests, the main emphasis was placed on the analysis of the impact of the control algorithm developed on the basis of the energy consumption of the bucket conveyor working in the jig unit.

Using Equation (2), the electricity consumption for transporting 1000 kg of material can be calculated and the function of efficiency can be presented using Equation (3) [8]:

$$\frac{E}{W} = \frac{E_{zn}e_p}{W_{zn}w} = \frac{22}{200w}\cdot(0.394w + 8.6) = 0.043 + \frac{0.95}{w} \quad (3)$$

where:

E_{zn}—energy consumed at rated operating conditions of the conveyor motor in one hour (kWh);

W_{zn}—rated conveyor capacity, $W_{zn} = 2 \times 105$ (kg/h);

e_p—energy consumption (%); and

w—conveyor load (%).

Figure 8 shows the unit electricity consumption as a function of efficiency.

Based on the carried out calculations, it was found that the conveyor working at full load (loading) consumed 0.053 kWh to transport 1000 kg of material, and when working with a load of 10%, the electricity consumption increased up to 0.138 kWh.

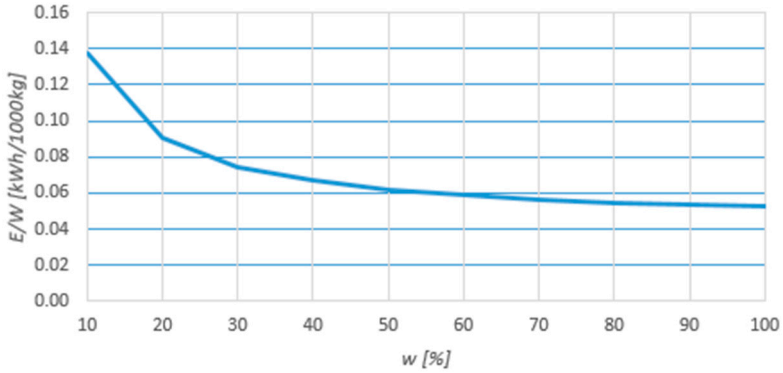

Figure 8. Unit electricity consumption as a function of efficiency [22].

As part of the verification work, a comparative analysis of the electricity consumption of the bucket conveyor motor operating in four modes was carried out:

Mode 1—with automatic control system (measurements in industrial conditions);

Mode 2—with continuous control (set value M_z = 3520 kg, which corresponds to 80% loading)-theoretical considerations);

Mode 3—with continuous control (set value M_z = 4400 kg, which corresponds to 100% loading-theoretical considerations); and

Mode 4—with constant rated speed (theoretical considerations).

As part of the tests, the bucket conveyor energy performance was monitored. Measurements were carried out on different days and at different times. Ten measurement cycles were recorded, Δt = 3600 s each, in which the electric power P consumed from the power grid by the conveyor motor and the linear speed of bucket movement were recorded. For each group of measurements, the electricity consumption E_p as well as the average percentage conveyor speed v_p were determined using the equation:

$$v_p = \frac{u_2}{v_{zn}} 100\% \quad (4)$$

where:

u_2—bucket linear speed (m/s); and

v_{zn}—rated linear conveyor speed (v_{zn} = 0.2 m/s).

Taking into account the nominal revolutions of the conveyor drive motor, n_n = 985 rpm, its average revolutions n at Δt were also calculated. The calculation results are presented in Table 4.

Table 4. Energy consumption and revolutions of the conveyor motor divided into individual tests [22].

No.	E_p (kWh)	v_p (%)	n (rpm)
1	59.46	64.22	632.57
2	61.58	62.44	615.03
3	56.95	61.32	604.00
4	49.14	58.79	579.08
5	65.21	60.02	591.20
6	62.85	64.11	631.48
7	53.79	66.58	655.81
8	57.17	67.05	660.44
9	52.07	66.37	653.74
10	50.87	65.18	642.02

Table 5 summarizes the basic operating parameters of the bucket conveyor in the four motor speed modes under analysis.

Table 5. Bucket conveyor operation parameters [21,22].

Mode	Working Time $\sum\Delta t$ (min)	Weight of Transported Material m (kg)	Energy Consumption E_w (kwh)	Percentage of Energy Consumption (%)
1	600	1,015,350	56.91	90.4
2			55.72	88.5
3			53.31	84.7
4			62.93	100.0

Experimental tests have shown that in the case of conveyor speed continuous control as a function of capacity and its full filling, energy consumption can be reduced by 15.3%. An implementation of the proposed algorithm reduced energy consumption by 9.6%. The decrease in electricity consumption of the conveyor was primarily due to the set value of 80% of the conveyor loading and the restrictions imposed on speed control. Comparing the obtained consumption and taking into account the load set point, the control error was 1.9%.

4. Results

The article presents a method of controlling the bucket conveyor speed. Verification tests focused primarily on the impact of the method on the energy consumption of the conveyor. The main assumption of the developed method was to reduce idling, extend the conveyor life, and reduce electricity consumption by achieving such a speed of the bucket conveyor movement that ensures nominal filling of buckets along the entire length of the conveyor. The application justification of this method was confirmed in experimental tests carried out at the "Sośnica" Mine in Gliwice, Poland, which showed a reduction in electricity consumption by 9.6%, at the conveyor filling of 80%. Verification tests focused primarily on the impact of the method on the energy consumption of the conveyor. This is related to the short-term character of such tests. However, savings are also expected with regard to extending the life of the conveyor. In the "Budryk" Mine in Poland, an algorithm in a similar form extended the time between overhauls by more than six months. In addition, it was found that the adopted structure of the control system with a simplified model mapped the object dynamics well enough. The conducted simulation tests confirmed the possibility of using the process of identification and pre-control to implement the tasks of identification and control of a complex system with delays in control paths. In addition, thanks to the use of information from process operators, it allowed for the stabilization of the conveyor load and the rationalization of the process. The verification studies focused primarily on the impact of the method on the energy consumption of the conveyor. This is related to the short-term nature of such research. Nevertheless, savings are also expected in terms of extended conveyor life.

Author Contributions: Conceptualization, S.J., G.K. and A.S.; Methodology, S.J.; Software, S.J., S.B. and D.B.; Validation, S.J. and G.K., Formal analysis, S.J. and G.K.; Investigation, S.J. and S.B.; Resources, S.J., G.K. and A.S.; Data curation, S.J.; Writing—original draft preparation, S.J. and A.S.; Writing—review and editing, S.J., G.K. and A.S.; Visualization, S.J., D.B., G.K. and A.S. All authors have read and agreed to the published version of the manuscript.

Funding: This research received no external funding.

Data Availability Statement: The data presented in this study are available on request from the corresponding author.

Conflicts of Interest: The authors declare no conflict of interest.

References

1. Cholewa, A.; Świder, J.; Zbilski, A. The analysis of energy consumption of the transport and manipulation process of Fanuc AM100iB robot, IOP Conference Series. *Mater. Sci. Eng.* **2018**, *227*, 1757–8981.
2. Świder, J.; Zbilski, A. Power losses and their properties for low range of a robot electric motor working conditions as the part of energy effectiveness research. *Eksploat. I Niezawodn.—Maint. Reliab.* **2018**, *20*, 542–548. [CrossRef]
3. McBride, W.; Sinnott, M.; Cleary, P.W. Discrete element modelling of a bucket elevator head pulley transition zone. *Granul. Matter* **2011**, *13*, 169–174. [CrossRef]
4. Kosucki, A.; Malenta, P.; Stawiński, Ł.; Halusiak, S. Energy consumption and overloads of crane lifting mechanism with system reducing operational loads. *Eksploat. I Niezawodn.—Maint. Reliab.* **2017**, *19*, 508–515. [CrossRef]
5. Gąska, D.; Margielewicz, J.; Haniszewski, T.; Matyja, T.; Konieczny, Ł.; Chróst, P. Numerical identification of the overhead travelling crane's dynamic factor caused by lifting the load off the ground. *J. Meas. Eng.* **2015**, *3*, 1–8.
6. Krol, R.; Kawalec, W.; Gladysiewicz, L. An effective belt conveyor for underground ore transportation systems. *IOP Conf. Ser. Earth Environ. Sci.* **2017**, *95*, 042047. [CrossRef]
7. Mukherjee, A.K.; Mishra, B.K. An integral assessment of the role of critical process parameters on jigging. *Int. J. Miner. Process.* **2006**, *81*, 187–200. [CrossRef]
8. Beldzik, J.; Głowiak, S.; Głowiak, Ł.; Grabowski, M.; Svach, J. The Method of Adjusting the Bucket Filling. Patent Description PL217351B1, 12 November 2013. (In Polish).
9. Liu, Y.; Xie, J.; Zhang, M.; Kuang, Y. Study on the Model System of Jig with Flexible Air Chamber and Pulsating Current Characteristics. In *XVIII International Coal Preparation Congress*; Springer Science and Business Media LLC: Berlin/Heidelberg, Germany, 2016; pp. 797–802.
10. Jendrysik, S.; Jasiulek, D.; Stankiewicz, K.; Babczyński, J. Implementation of a jig control system at BUDRYK Coal Mine. *IOP Conf. Ser. Mater. Sci. Eng.* **2019**, *679*, 012006. [CrossRef]
11. Ma, F.; Xiong, F.; Li, G. Key Structure Innovation and Optimization Design of Bucket Elevator. In *International Workshop of Advanced Manufacturing and Automation*; Wang, K., Wang, Y., Strandhagen, J., Yu, T., Eds.; Springer: Singapore, 2018; pp. 623–627.
12. Turygin, Y.; Bozek, P.; Abramov, I.; Nikitin, Y. Reliability determination and diagnostics of a mechatronic system. *Adv. Sci. Technol. Res. J.* **2018**, *12*, 274–290. [CrossRef]
13. Matusiak, P.; Kowol, D. Rozwój osadzarek pulsacyjnych typu KOMAG. *Masz. GÓR* **2018**, *36*, 40–52. (In Polish)
14. Stankiewicz, K. Mechatronic systems developed at the KOMAG. *Min. Mach.* **2020**, 58–68. [CrossRef]
15. Cierpisz, S.; Joostberens, J. Monitoring of coal separation in a jig using a radiometric density meter. *IFAC-Pap. Line* **2015**, *48*, 74–79. [CrossRef]
16. Kowol, D.; Matusiak, P. Improving the quality of hard coal products using the state-of-the-art KOMAG solutions in a pulsating jig nod. In Proceedings of the IOP Conference Series: Materials Science and Engineering, Kocierz, Beskid Mały, Poland, 16–19 September 2019; Volume 641, p. 1.
17. Matusiak, P.; Kowol, D. Use of state-of-the-art jigs of KOMAG type for a beneficiation of coking coal. *Min. Mach.* **2020**, 46–55. [CrossRef]
18. Kost, G.; Jendrysik, S.; Sękala, A. Identification of the mathematical model of the bucket conveyor. In *Modelling in Engineering 2020: Applied Mechanics*; SMWM 2020, Advances in Intelligent Systems and Computing; Springer: Cham, Switzerland, 2021; Volume 1336, pp. 155–167.
19. Seborg, D.E.; Mellichamp, D.A.; Edgar, T.F.; Doyle, F.J., III. *Process Dynamics and Control*; John Wiley & Sons: Hoboken, NJ, USA, 2010.
20. Ljung, L. State of the art in linear system identification: Time and frequency domain methods. In Proceedings of the American Control Conference, Boston, MA, USA, 30 June–2 July 2004; Volume 1, pp. 650–661.
21. Jendrysik, S.; Kost, G. Control of Bucket Conveyor's Output. In *Advances in Intelligent Systems and Computing, Proceedings of the Mechatronics 2017—Ideas for Industrial Applications, Gliwice, Poland, 13–15 September 2017*; Świder, J., Kciuk, S., Trojnacki, M., Eds.; Springer: Cham, Switzerland, 2019; Volume 934.
22. Jendrysik, S.; Kost, G. Method of Controlling the Bucket Conveyor in a Jig Beneficiation Node. Ph.D. Thesis, KOMAG, Gliwice, Poland, 2018. (In Polish).