Supporting Information

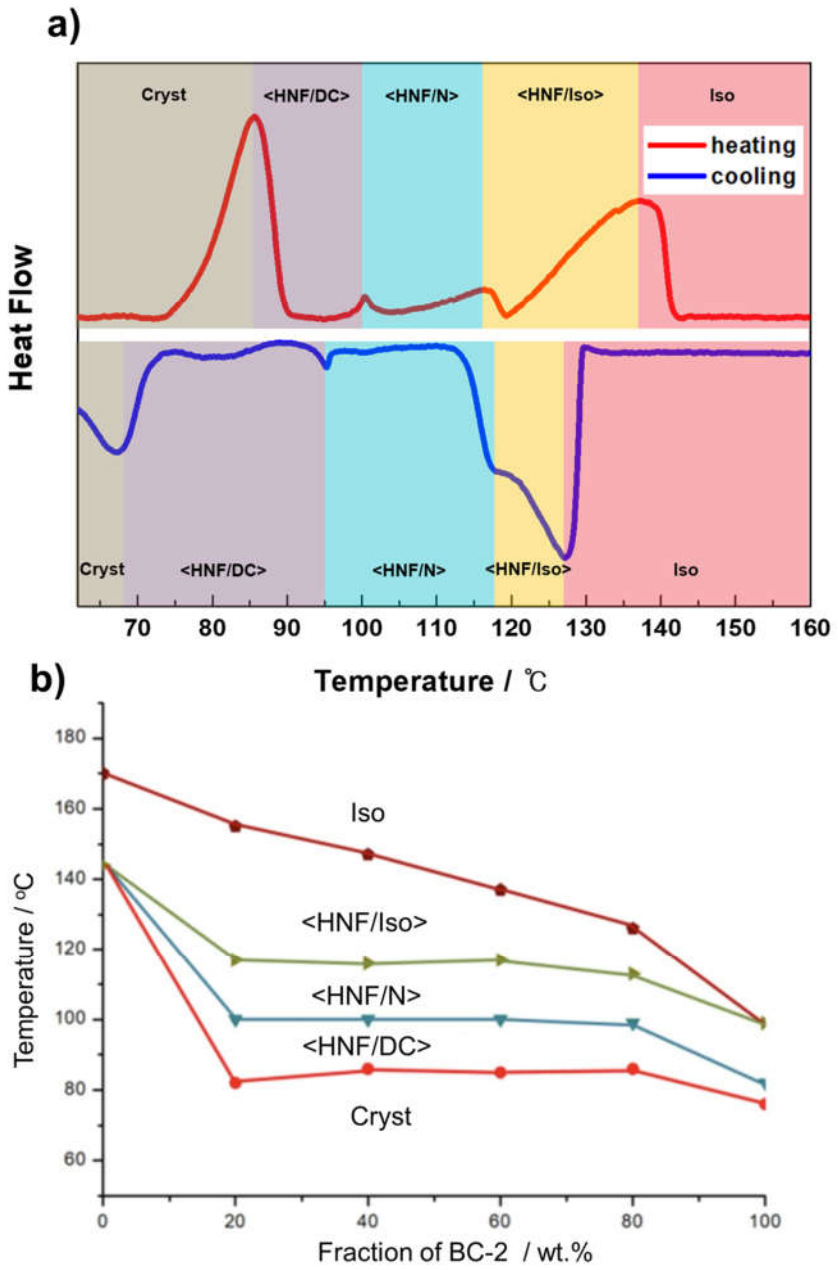

Figure S1. (a) DSC profile of the mixture composed of BC-1 (host) and 40 wt.% BC-2 (guest). (b) Phase diagram of binary mixture systems with different fractions.

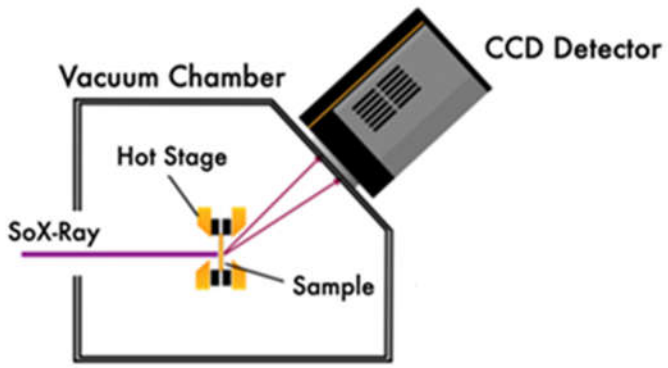

Figure S2. Schematic of the two-dimensional resonant soft X-ray scattering experiment.

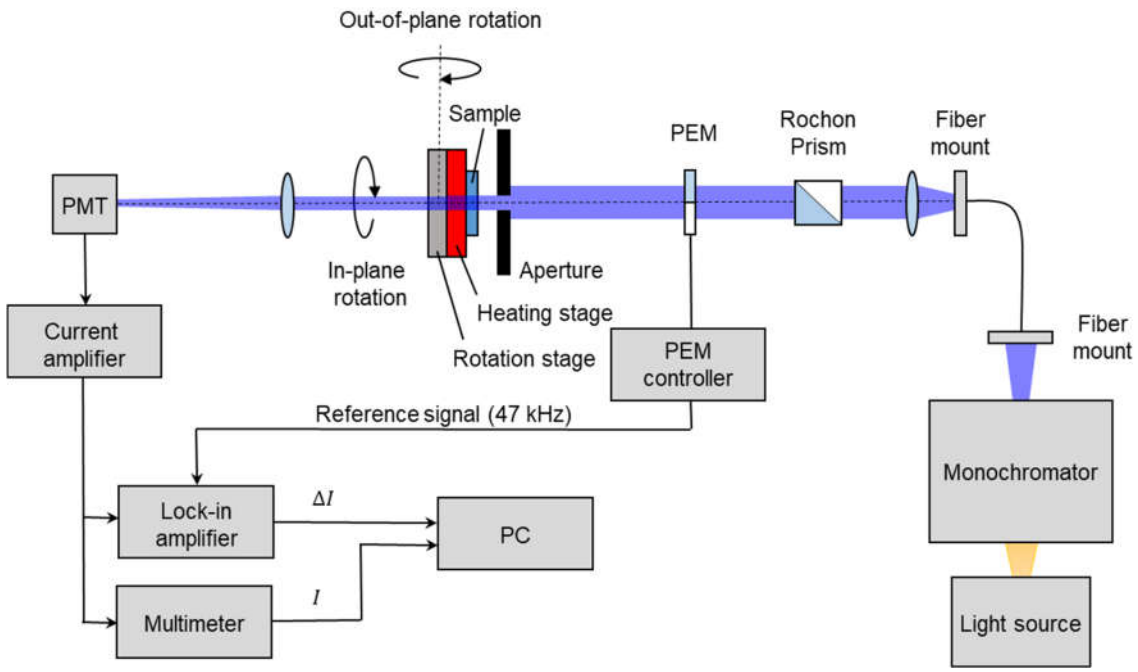

Figure S3. Schematic of the custom-made circular dichroism spectroscopic system.

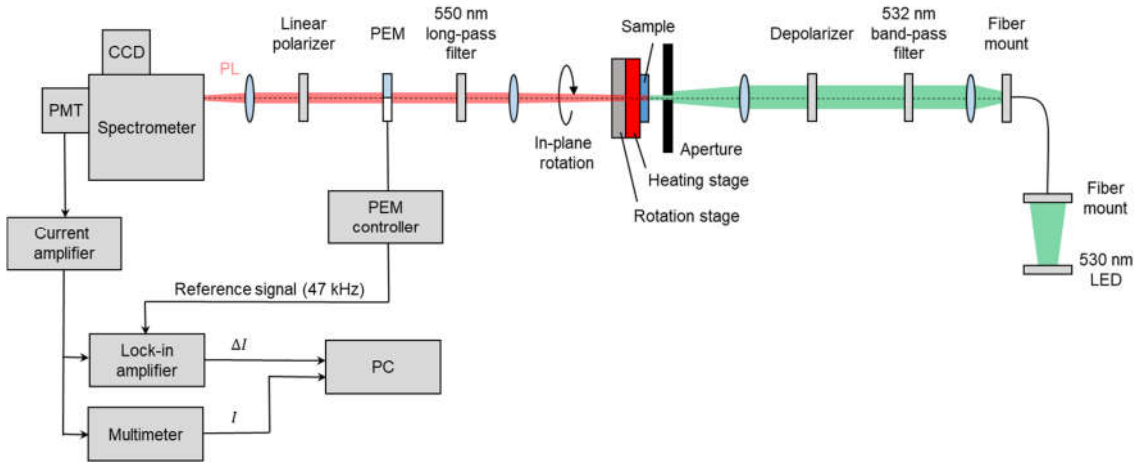

Figure S4. Schematic of the custom-made circularly polarized luminescence (CPL) spectroscopic system.