Journal of
Theoretical and Applied Electronic Commerce Research

MDPI

Article

Internet Usage among Senior Citizens: Self-Efficacy and Social Influence Are More Important than Social Support

Mirjana Pejić Bach, Lucija Ivančić, Vesna Bosilj Vukšić, Ana-Marija Stjepić * and Ljubica Milanović Glavan

Faculty of Economics & Business, University of Zagreb, 10000 Zagreb, Croatia; mpejic@efzg.hr (M.P.B.); livancic@efzg.hr (L.I.); vbosilj@efzg.hr (V.B.V.); lmilanovi@efzg.hr (L.M.G.)
* Correspondence: astjepic@efzg.hr

Abstract: For more than two decades, developed countries have been confronted with two trends that have implications for the emergence of engaging senior citizens in the digital environment. On the one hand, there is an increasing proportion of senior citizens in the total population. On the other hand, the application of ICT in all areas of life and business is accelerating. This paper investigates the relationship between self-efficacy, social support, and social influence on Internet usage among senior citizens in Croatia. Survey research was conducted on a sample of Croatian senior citizens, and a structural equation mode was developed for testing the research hypothesis. Self-efficacy influenced both the Intensity and obstacles of Internet usage in a positive and negative manner, respectively. Social influence directly decreased the obstacles to Internet usage, while the relationship with the Intensity of the Internet was indirect through self-efficacy. Social support had only an indirect association with Intensity of Internet usage. Results have relevant implications for programmes aiming to enhance Internet usage among senior citizens, which should focus on the educational programmes fostering perceived self-efficacy of Internet usage among senior citizens.

Keywords: senior citizens; Internet usage intensity; Internet usage obstacle; self-efficacy; social influence; social support; older people

check for updates

Citation: Pejić Bach, M.; Ivančić, L.; Bosilj Vukšić, V.; Stjepić, A.-M.; Milanović Glavan, L. Internet Usage among Senior Citizens: Self-Efficacy and Social Influence Are More Important than Social Support. *J. Theor. Appl. Electron. Commer. Res.* **2023**, *18*, 1463–1483. https://doi.org/10.3390/jtaer18030074

Academic Editor: Luis Felipe Luna-Reyes

Received: 9 May 2023
Revised: 14 August 2023
Accepted: 28 August 2023
Published: 31 August 2023

Copyright: © 2023 by the authors. Licensee MDPI, Basel, Switzerland. This article is an open access article distributed under the terms and conditions of the Creative Commons Attribution (CC BY) license (https://creativecommons.org/licenses/by/4.0/).

1. Introduction

Usage of the Internet and information and communication technology (ICT) has significantly disrupted both workplaces [1] and everyday life [2]. It is especially important for senior citizens (65 years and older), whose Internet usage significantly increased from the beginning of the Web 2.0 technology era in 2010 [3]. However, senior citizens have problems accessing and using modern digital devices and thus face challenges in the qualitative use of the Internet [4]. Various authors have diverse focuses when researching the use of the Internet in the older population, investigating the availability of Internet services [5], the level of trust and readiness when using the Internet and Internet-based applications [6,7], and awareness of the risks of using the Internet [8].

As reported by Croatian Bureau of Statistics data, the average age of the Croatian population increased from 37 years in 1991 to 44 years in 2021 [9], following the trend in most of the European countries [10]. According to [11], there is a noticeable increase in the proportion of people over the age of 65, and their share in the total population is expected to increase. Thus, in 2001, 15.7% of people living in the Republic of Croatia were over the age of 65; in 2013, this share was 17.7%; and the most recent census revealed that nearly 25% of the Republic of Croatia's population belonged to that segment [9,11].

A brief review of the literature reveals that a few studies conducted in Croatia address the issue of elderly digital inclusion. According to the results of a study conducted by [12], due to the relatively low level of digital literacy among Croatian senior citizens, knowledge transfer "from the young to the elderly" needs to be made to achieve adequate inclusion of senior citizens in an information-based society. The findings of the study conducted

by [13] show that the barriers related to seniors' adoption of digital technologies and their use of digital health and social care services provided by Croatian institutions are very similar to those in many other countries. This paper is developing a structural equation model that tests the association with self-efficacy, social impact, and social support on the Intensity of Internet usage and observed barriers to Internet usage for senior citizens. This research is conducted as part of the project "SENIOR 2030—a thematic network for active ageing policy in Croatia", developing a proposal for an active ageing strategy based on the Silver Economy.

The remainder of the article is organised as follows. After the introduction, a literature review and hypothesis development are presented. The methodology section describes the data collection, the development of the research instrument, and the statistical analysis process. Descriptive statistics, confirmatory factor analysis, and structural equation modelling are used to analyse and test the data and hypotheses. The results are further analysed and discussed. The limitations of the study are highlighted. Finally, the paper concludes with a brief overview of the research findings. Limitations and recommendations for future research are pointed out.

2. Literature Review and Hypothesis Development

In general, the term social influence refers to an alteration in the individual's behaviour, thinking, and feelings resulting from his presence and interaction with other people or groups of people [14]. Likewise, in their work, [15] explains how the social influence process certainly shapes the individual's further behaviour and thinking. This influence process lays the foundations for the later identity development of the individual, his later decisions, and future socialisation [15]. Similarly, various authors accentuate how social influence strongly impacts each person's behaviour progress [16,17].

Ref. [16] developed the "attitude–social influence–efficacy model" in their work. Self-efficacy can be explained as a tendency in which people are motivated to behave in a certain way if they have sufficient self-confidence that they will be able to perform such behaviour and that such behaviour will achieve the desired goal [18]. According to [17], there are three types of self-efficacy which include (1) reactions of the individual that are motivated by self-satisfaction and reactions that are motivated by dissatisfaction with oneself; (2) perception of self-efficacy in achieving one's goals; and (3) adjustment of planned objectives based on one's advancement. Accordingly, it can be concluded that self-efficacy and social influence shape an emotional state, opinions, and motivations [19].

In addition to social influence and self-efficacy, many authors also emphasise the concept of social support as one of the factors that influence the formation of an individual in the context of his further behaviour [20]. Social support can be defined as the individual's perception or experience of care, appreciation, respect, acceptance, and social inclusion, which can be provided by the society with which the individual interacts [21]. Therefore, social support for an individual can be provided by family, friends, colleagues, acquaintances, and all other participants in the individual's social life.

Social support, social influence, and self-efficiency interact, which is crucial in using ICT among senior citizens [22]. According to all of the above and to examine the mutual relations between the terms mentioned above: social influence, social support, and self-efficacy, the three following hypotheses are defined and investigated in this work:

H1. *Social influence is positively related to self-efficacy.*

H2. *Social support is positively related to self-efficacy.*

H3. *Social influence is positively related to social support.*

When observing the use of information and communication technologies, including the Internet, among older people, the authors of papers often emphasise self-efficacy as one of the main determinants of the relationship [22–24]. According to [23], self-efficacy can be defined as an individual's positive or negative opinion of successfully using the

Internet by themselves. In their work, ref. [25] describe the term Internet self-efficacy as the ability of an individual to perform certain Internet activities independently to realise the desired opportunities and services provided by the Internet. Consequently, the authors of this work defined the following hypothesis:

H4. *Self-efficacy is positively related to the Internet usage intensity.*

Furthermore, many authors in their works point out that social influence encourages older people to use ICT [22,23,26]. However, it is important to know that social influence in such a context refers to recommendations and opinions about the use of the Internet and digital technology that come from their immediate environment; that is, resources that are given to them by their peers or family [22,26,27]. According to de Veer et al. (2015), social influence as the perception of older users about the importance of using the new system, in this case, the Internet, comes from the well-known theoretical model called the Unified Theory of Acceptance and Use of Technology (UTAUT), which examines the plan of each person in which he defines his behaviour in one way or another. Generally, within the UTAUT model, the individual's intention to use ICT is influenced by four determinants: (1) the individual's belief that the accepted technology will help him to improve the performance of business tasks; (2) the individual's attitude about the complexity of using the accepted technology; (3) respect for the opinion of the environment about whether or not one should use the planned technology in order to be accepted; and (4) personal attitude about the technological and organisational readiness of the system in which it operates [28]. Therefore, the following hypothesis was examined in this paper:

H5. *Social influence is positively related to the Internet usage intensity.*

Moreover, various authors emphasise social support as an important factor for successfully using ICT and the Internet, such as [22,24,29,30]. According to [31], social support is vital for older people to accept ICTs, such as using tablets for communication. Similarly, ref. [32] points out the importance of social support in adopting and using information and communication technologies and the Internet. Moreover, in their study, ref. [33,34] accentuates the significance of social support as support from acquaintances in the context of proper support in learning how to manage new technology or in the context of emotional support in using information and communication technology. Accordingly, the next hypothesis is imposed and investigated in this work:

H6. *Social support is positively related to the Internet usage intensity.*

As previously mentioned, self-efficacy is an individual's awareness that they can perform certain activities with the skills they possess [17,19,25]. Also, a person with a higher level of self-efficacy will put more effort and willingness to overcome possible obstacles that can stand in the way of preferred behaviour [17,19,25]. In this way, it is assumed that an individual who believes that he has sufficient skills to use information technology, hence, to search the Internet and use the provided Internet services, will definitely and more easily overcome any obstacles in Internet usage [25]. Likewise, ref. [33,34] in his work emphasises how it is necessary to improve self-efficacy due to the challenges of using the Internet, specifically in online transactions. Accordingly, the authors of this paper want to examine the negative influence of self-efficacy on Internet use obstacles by forming the following hypothesis:

H7. *Self-efficacy is negatively related to Internet usage obstacles.*

Various authors are investigating how social influence can reduce potential obstacles in new information and communication technologies [35–37]. For instance, the results of [35] revealed how social influence positively reduces potential resistance to innovation in banking services provided by the Internet. Similarly, ref. [38] emphasises the importance of social influence, especially the influence of family members, in overcoming any insecurities that could cause refusal of Internet usage. In their work, ref. [37] accentuates how it is necessary to familiarise the individual's social environment with the application of

e-learning so that he receives sufficient information, knowledge, and skills from his environment to successfully overcome any challenges in learning how to use e-learning platforms. Therefore, the following hypothesis is established for the examination in this paper:

H8. *Social influence is negatively related to Internet usage obstacles.*

In addition to self-efficacy and social influence, authors from different areas of research note that social support also successfully contributes to eliminating potential obstacles in applying information communication technology [31,39]. Generally, social support can help people more easily deal with the negative side effects of stress caused by different life situations which require them to change their existing behaviour or thinking [40,41]. According to [39], social support enhances the motivation of older people to overcome possible difficulties that come with learning new digital skills and generally using information and communication technologies. Likewise, ref. [31] reveals that older people encounter certain difficulties in learning how to work with information communication technology or challenges in its active use; the help and encouragement of their family and friends will be crucial in continuing to use the new technology and its functionalities. For that reason, the final hypothesis is recognised and investigated in this work:

H9. *Social support is negatively related to the Internet usage obstacles.*

After defining the hypotheses following the results of the literature review of the researched area, a conceptual research model was developed (Figure 1).

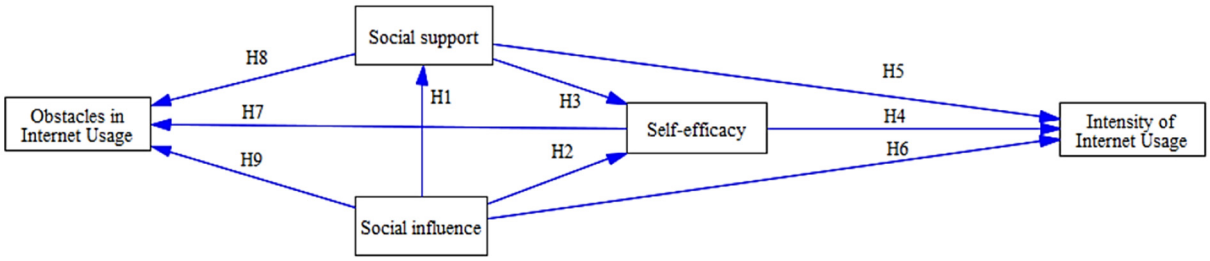

Figure 1. Research model. Source: Authors' work.

3. Methodology

3.1. Data

The data analysed in this article were collected as part of a broader study on the financial situation, well-being, and social inclusion of older people coordinated by the Croatian Association of Pensioners as part of the project "Senior 2030—Thematic Network for Active Ageing Policy in Croatia" funded by the European Social Fund. Accordingly, the eligible population for this research was senior citizens from the territory of the Republic of Croatia.

This research used a quota sample based on representative proportions according to the 2011 census. Representativeness was considered for the region (NUTS 2 level) and gender. Households were randomly selected, as was the selection of respondents in the household if the household contained more than one person of older age. The term "senior citizen" refers to persons 65 years of age and older, according to the OECD definition [42] accepted in most developed countries. According to the United Nations report [43], the number of senior citizens will increase to over 2 billion by 2050.

Therefore, data for this study were collected through a quantitative survey of the sample of senior citizens (65+) in Croatia. The structured questionnaire was developed in English, based on previously validated scales from the relevant literature [22,24,44]. The questionnaire was then translated into Croatian for data collection. The responses to the questionnaire were collected in January 2022 using the CATI (Computer Assisted Telephone Interviewing) method.

3.2. Research Instrument

The following constructs were used for the data collection: self-efficacy of Internet usage, social influence for Internet usage, social support for Internet usage, obstacles in Internet usage, and intensity of Internet usage. For the first three constructs, we used the scales validated in previous research [22,24,30,44], while the constructs obstacles in Internet usage and intensity of Internet usage were our operationalisations. These constructs are presented in more detail in Table 1.

The self-efficacy measure assesses how easily respondents can use the Internet and how comfortable they feel using it. Social influence measures include perceived incentives to use the Internet from close social surroundings. The social support measure includes activities from the social environment that aim to increase respondents' Internet usage. The above-mentioned variables had a seven-point Likert scale ranging from 1 (strongly disagree) to 7 (strongly agree). Variable C11_10 was excluded from the further analysis based on the results of exploratory factor analysis.

The obstacles in Internet usage dimension was operationalised with six items listing common Internet use barriers among older people. Respondents could select none, one, or more barriers that applied to their case. The total number of obstacles was used in the model as an ordinal variable with values ranging from 0 (no obstacles) to 3 (three and more obstacles).

Table 1. Research instrument.

Construct	Code	Research Item	Item Measurement
Self-efficacy of Internet Usage (Guan et al., 2017 [22]; Taylor and Todd, 1995 [44]; Hsieh, Rai and Keil, 2011 [24])	C11_1	You feel comfortable using the Internet on your own.	Likert scale (1—do not agree, 7—fully agree)
	C11_2	You can easily operate the Internet on your own.	
	C11_3	You feel comfortable using the Internet even if no one is around you to tell you how to use it.	
Social Influence on Internet Usage (Guan et al., 2017 [22]; Taylor and Todd, 1995 [44]; Hsieh, Rai and Keil, 2011 [24])	C11_4	Your family thinks that you should use the Internet.	Likert scale (1—do not agree, 7—fully agree)
	C11_5	Your relatives think that you should use the Internet.	
	C11_6	Your friends think that you should use the Internet.	
Social Support for Internet Usage (Guan et al., 2017 [22]; Wu and Rudkin, 2000 [30]; Hsieh, Rai and Keil, 2011 [24])	C11_7	You have someone to help solve Internet-related problems.	Likert scale (1—do not agree, 7—fully agree)
	C11_8	You have friends or family to provide the necessary help to use the Internet.	
	C11_9	You have friends and family to help with solving Internet-related problems.	
	C11_10	You are supported by those around you when you have difficulty using the Internet.	
Obstacles to Internet Usage	C1_sum	The number of obstacles in Internet Usage that the respondent faced in the last 3 months such as: Lack of knowledge about using the device; Not having anyone to help to install and use the device; The appearance of the applications is complicated for the respondent and is not suitable for a user of the third age; Respondent does not understand certain functions because they are in a foreign language; Too much distracting content (advertisements, etc.); Poorly adapted for the vision, hearing and motor skills of older people	0—no obstacles 1—one obstacle 2—two obstacles 3—three and more obstacles

Table 1. *Cont.*

Construct	Code	Research Item	Item Measurement
Intensity of Internet Usage	C7_sum	The number of purposes that the Internet was used for by the respondent in the last 3 months such as: *Communication with family and friends* via *video calls (ZOOM, Skype, Teams); Communication with family and friends* via *e-mail and messaging applications (Viber, WhatsApp, Messenger, etc.); Social networks (Facebook, etc.); News about everyday events (portals, magazines, etc.); For paying bills and other financial transactions; Ordering medical examinations in health institutions; For ordering medicines and referrals, exchanging information with the family doctor; Internet shopping; To perform work (paid or volunteering); For writing and other forms of creative expression; For editing files (video, audio, photo); For watching and listening to movies, music and photos; For learning (independent or e-learning); Using the eCitizen platform service; Using the service of the health care platform*	0—no form of use 1—one form of use 2—two forms of use 3—three and more forms of use

Source: Authors' work based on [22,24,30,44].

The intensity of the Internet usage dimension was operationalised with fifteen items assessing the use of 15 Internet services. The items were measured as binary dummy variables with a value of 0 if the respondent did not use the service and 1 if the respondent used the service regularly. Respondents could select none, one, or more usage types that applied to their case. The total number of forms of Internet usage was used in the model for measuring the intensity of Internet usage as an ordinal variable (C7_sum), ranging from 0 (no form of use) to 3 (three and more forms of use).

3.3. Statistical Analysis

We applied several statistical analyses to ensure research or construct validity and to test the hypothesis, as described in the continuation.

According to [45], a detailed assessment of the construct validity needs to be performed to establish the accuracy of the research. Construct validity is the extent to which measured items accurately reflect the theoretically designed latent constructs and should include four components: face, nomological, convergent, and discriminant. While these four validity assessments are appropriate and sufficient for establishing the construct validity when the confirmatory factor analysis method is used [46], some research suggests combining the confirmatory factor analysis with exploratory factor analysis [47,48], as was carried out in this study.

To begin with, as we used previously developed scales from the literature for the research instrument in this study and refined them to be suitable for our research context, face validity was ensured [47].

Second, we calculated descriptive statistics of construct items presented in Table 2, followed by a correlation analysis to check the measured variables' consistency and ensure that the instrument's nomological validity was given [48].

Table 2. Sample characteristics.

Characteristics	*N*	%
Gender *		
Male	273	38.9
Female	428	61.1

Table 2. *Cont.*

Characteristics	*N*	%
Age (years) *		
65–69	248	35.4
70–74	197	28.1
75–79	142	20.3
80–84	85	12.1
≥85	29	4.1
Size of the settlement *		
Urban settlement	399	56.9
Suburban settlement	113	16.1
Rural settlement	182	26.0
A house outside the settlement	7	1.0
Education *		
No education or less than eight grades of primary school	47	6.7
Elementary school (eight-year)	81	11.6
High school (three-year or four-year)	349	49.8
Higher education	224	32.0

* Total sample: *N* = 701. Source: Authors' work, based on a survey, January 2022.

Third, we conducted an exploratory factor analysis to further inspect the instrument's validity. Even when scales that have already been validated in previous research are used, as was the case with this study, an exploratory inspection of the measurement instrument should be conducted, following the a priori assumption that any item can be associated with any factor [47]. In exploratory factor analysis, we observed how each item loads on each factor to preliminary examine the instrument scales. One of the items in the instrument demonstrated cross-loading. Thus, it was excluded from further analysis, as it did not represent uniquely one factor. All other items loaded strongly on one, as well as their predicted factor from Table 1, and were used for creating the measurement model in the fourth step.

Fourth, we evaluated a measurement model by using confirmatory factor analysis. The purpose of evaluating a measurement model in SEM is to confirm how well the items in the measurement instrument represent the hypothesised constructs for the data obtained in the study, and it is a prerequisite for further assessment of the structural model. We used a confirmatory factor analysis procedure suggested by [49] to inspect the psychometric properties of the instrument. In this process, it is suggested first to assess a set of goodness-of-fit indicators, including both absolute and incremental fit indices, to test the overall validity and afterwards to test the convergent and discriminant validity of the measurement model. Therefore, a set of goodness-of-fit indicators were used to test the model's overall validity, i.e., to check the representativeness of the model. We checked absolute fit indices, namely the Chi-square index (χ^2), Chi-square statistic ratio or normed Chi-square (χ^2/df), Root Mean Square Error of Approximation (RMSEA), Standardised Root Mean Residual (SRMR), and Goodness-of-fit index (GFI), as well as incremental fit indices, namely Comparative Fit Index (CFI) and Tucker Lewis Index (TLI). We then examined factor loadings, composite reliability (CR), and average variance extracted (AVE) to determine each construct's shared variance and test convergent validity. Finally, we assessed discriminant validity by applying the Fornell–Larcker criterion [46] to observe how uniquely the manifest variables represent each construct and other constructs. This approach allowed us to obtain a complete picture of how the manifest (measured) variables represent the latent variables (constructs), i.e., to achieve construct validity of the measurement model, as suggested by [45].

Finally, after we evaluated the measurement model, we evaluated the structural model. Multiple dependency relationships among constructs in the path model were tested using structural equation modelling as proposed in (Hair, Babin and Krey, 2017 [46]). The

overall fit of the model was tested using several indicators of goodness-of-fit, namely the Chi-square index (χ^2), Chi-square ratio or normed Chi-square (χ^2/df), Comparative Fit Index (CFI), Tucker Lewis Index (TLI), Normed Fit Index (NFI), Non-Normed Fit Index (NNFI), Root Mean Square Error of Approximation (RMSEA), and Standardised Root Mean Residual (SRMR) (Hoe, 2008; Hair et al., 2014; Hair, Babin and Krey, 2017 [45,46,50]). Then, the path model analysis was performed to examine the statistical significance of the path coefficients and test the proposed hypothesis.

The statistical software JASP, version 0.16.3, was used to perform all the above-mentioned statistical analysis procedures.

4. Results

4.1. Sample Characteristics

The sociodemographic characteristics of the sample are presented in Table 2. A total of 701 responses were collected. A percentage of 61.1% of respondents identified themselves as female, while 38.9% identified themselves as male. A percentage of 35.4% of the respondents are between 65 and 69 years old; 28.1% are in the 70–74 age group; and 20.3% are in the 75–79 age group. Finally, 12.1% of respondents are between 80 and 84 years of age, while 4.1% are 85 or older.

In the sample, the majority of respondents, 56.9%, live in urban settlements, and 16.1% of respondents live in suburban settlements. In contrast, 26.0% of respondents live in rural settlements. A percentage of 1% of the respondents from the sample say that they live in a house isolated from a settlement. Most older people from our sample have a three- or four-year high school diploma (49.8%), followed by 32.0% of respondents with a university education. A percentage of 11.6% of the respondents have completed only elementary school, and 6.7% reported having no formal education or completing only a few years of elementary school.

4.2. Descriptive Statistics

The descriptive statistics for the three main constructs are given in Tables 3–5, and the correlation matrix for the first three constructs is presented in Table 6.

Table 3. Descriptive statistics for the Internet usage.

	N	Minimum	Maximum	Mean	Std. Dev.
Self-efficacy of Internet Usage					
C11_1	701	1	7	4.11	2.355
C11_2	701	1	7	4.03	2.359
C11_3	701	1	7	3.98	2.348
Social Influence on Internet Usage					
C11_4	701	1	7	4.12	2.186
C11_5	701	1	7	3.93	2.174
C11_6	701	1	7	3.77	2.134
Social Support for Internet Usage					
C11_7	701	1	7	4.60	2.284
C11_8	701	1	7	4.62	2.315
C11_9	701	1	7	4.58	2.335

Source: Authors' work, based on a survey, January 2022.

The highest mean value for the construct Internet usage (4.62) is obtained for the variable C11_8 (Table 3). Variable C11_8 measures help from friends and family in Internet services, suggesting that the strongest incentive for older people to use the Internet comes from concrete informatics support from their closest social relationships. The smallest mean value (3.77) was obtained for variable C11_6, which measures the perceived social influence of friends as an incentive for Internet use. The smallest mean value of this Internet

usage factor indicates that the social influence of friends to use the Internet is relatively low compared to other Internet usage factors in the older population.

Table 4. Internet usage obstacles and Internet usage intensity.

Internet Usage Obstacles			Internet Usage Intensity		
# of Obstacles	**N**	**%**	**# of Usages**	**N**	**%**
0—no obstacles	258	36.8%	0—no usage	295	42.1%
1—one obstacle	279	39.8%	1—one form of use	42	6.0%
2—two obstacles	81	11.6%	2—two forms of use	55	7.8%
3—three and more	83	11.8%	3—three and more	309	44.1%
Total	701	100%	Total	701	100%

Source: Authors' work, based on a survey, January 2022.

Table 5. Spearman's rho correlation analysis of C11_1–C11_9 variables.

Variable	C11_1	C11_2	C11_3	C11_4	C11_5	C11_6	C11_7	C11_8	C11_9
C11_1	1.000								
C11_2	0.877 *	1.000							
C11_3	0.875 *	0.874 *	1.000						
C11_4	0.545 *	0.549 *	0.548 *	1.000					
C11_5	0.519 *	0.514 *	0.517 *	0.771 *	1.000				
C11_6	0.568 *	0.560 *	0.579 *	0.720 *	0.739 *	1.000			
C11_7	0.524 *	0.521 *	0.509 *	0.581 *	0.512 *	0.507 *	1.000		
C11_8	0.500 *	0.507 *	0.489 *	0.563 *	0.525 *	0.484 *	0.832 *	1.000	
C11_9	0.521 *	0.524 *	0.500 *	0.570 *	0.526 *	0.504 *	0.826 *	0.830 *	1.000

Note: * statistically significant at 1%. Source: Authors' work, based on a survey, January 2022.

Table 6. Rotated factor matrix for three factors.

Item	Item Loadings		
	PC1	**PC2**	**PC3**
C11_1		0.881	
C11_2		0.878	
C11_3		0.880	
C11_4			0.795
C11_5			0.846
C11_6			0.794
C11_7	0.854		
C11_8	0.868		
C11_9	0.856		
C11_10	0.593	0.509	

Source: Authors' work, based on a survey, January 2022.

The intensity of obstacles to Internet usage is summarised in Table 4. As shown in Table 4, the majority of respondents, with a percentage of 39.8%, say they encounter only one obstacle when using Internet services. This percentage is followed by a relatively high percentage of 36.8% of respondents who indicated that they do not encounter any obstacles when using the Internet. Finally, 11.6% of older people in our sample identified two obstacles, and 11.8% said they encountered three or more obstacles when using Internet services.

The intensity of Internet services usage is summarised as follows: 44% of respondents state they have three or more reasons for using the Internet, i.e., three or more types of services that they regularly use, which represents the majority of the sample. A percentage of 7.8% say they regularly use two types of Internet services, and 6.0% say they regularly use one Internet service. However, 42.1% of respondents also do not regularly use a single Internet service.

A non-parametric correlation analysis was conducted for the items of the construct Internet usage to assess the consistency of the measurement instrument. Items of the same construct are expected to correlate, indicating that they are similar enough to measure the same variable in the instrument.

Spearman correlation coefficients are presented in Table 5, and they show predominantly high correlations (>0.5) between construct variables, with several values below but close to the 0.5 value. Since no negative or low correlations were found, and the correlation coefficients are positive and strong, the correlation analysis confirms the consistency of the measurement instrument [47].

In addition, the coefficients are very high (>0.7) between the items of each dimension of Internet usage, i.e., between the items of self-efficacy (C11_1–C11_3), social influence (C11_4–C11_6), and social support (C11_7–C11_9). Since the coefficients for the items in a particular dimension are higher than those between the items belonging to different dimensions, the correlation analysis first gave insight into the uniqueness of the latent variables, which will be further investigated in the CFA analysis and confirms the nomological validity.

4.3. Exploratory Factor Analysis

We used an exploratory factor analysis (EFA) to examine the underlying structure of the measurement instrument, following the a priori assumption that any item may be associated with any factor [50]. Since the main statistical analysis method used in the study was confirmatory factor analysis, EFA was used as a supplement for the preliminary exploration of instrument properties.

Three latent factors were extracted using the principal component analysis with varimax rotation, as presented in Table 6. Common thresholds for moderate and acceptable loadings to interpret the factors range from 0.4 to 0.7, while values of 0.8 or greater indicate a strong accuracy of the items [51]. One of our items, C11_10, demonstrated cross-loading, as it loaded on two factors (PC1 and PC2). According to [51], the item should be discarded if loaded adequately to strong, i.e., 0.5 or above on several factors. Therefore, since item C11_10 had two loaders above the cut-off value of 0.5, it was excluded from further analysis, as it did not uniquely represent one factor. All other items (C11_1–C11_9) had loaders above 0.7 and 0.8, i.e., loaded strongly on one factor.

Since the convergent validity was examined using the EFA, a variable was deleted; as a result, we continued with the validation of factor analysis in the following step, using nine items (C11_1–C11_9) in a three-factor model.

4.4. Confirmatory Factor Analysis

We used a confirmatory factor analysis (CFA) procedure to inspect the properties of the measurement model. As a first step in evaluating our measurement model, we observed overall model fit using common goodness-of-fit indicators to check the representativeness of the model. After that, we tested convergent validity by examining factor loadings, composite reliability (CR), and average variance extracted (AVE) for each construct. Finally, discriminant validity was assessed by applying the Fornell–Larcker criterion.

CFA analysis was performed for the entire sample. A three-factor model was established, with the factors being namely self-efficacy, social influence, and social support. The graph of items with their established factors is presented in Figure 2. Manifest variables C11_1–C11_3 were loaded on the self-efficacy factor; the variables C11_4–C11_6 were loaded on the social influence factor; and the variables C11_7–C11_9 were loaded on the social support factor. All latent factors were assumed to be correlated with each other, as the variance of the factors was set to 1.0. A covariance matrix with a maximum likelihood (ML) method was used to estimate the parameters.

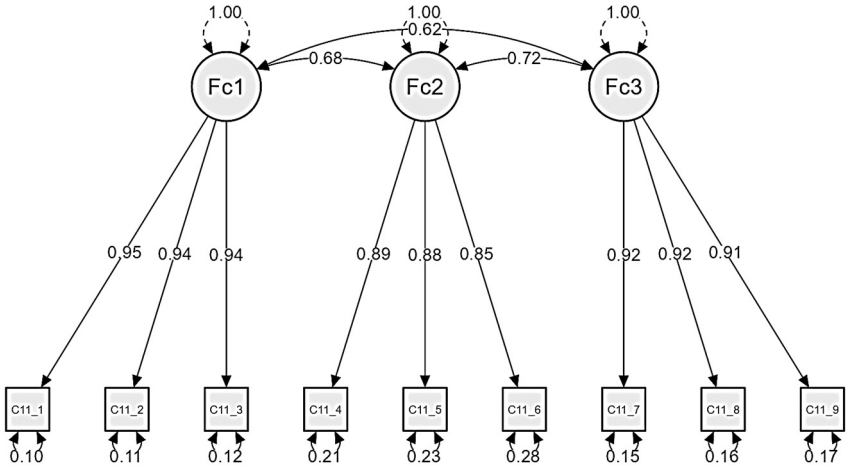

Figure 2. Model plot with standardised parameters; Source: Authors' work, survey, January 2022.

Goodness-of-fit indicators are shown in Table 7. The Chi-square of 43.438, with 24 degrees of freedom and $p = 0.009$, is statistically significant at a 95% confidence level and therefore does not indicate an adequate fit of the model. However, in such a case, other tests should be performed to reject or accept the proposed measurement model, such as the Chi-square statistic ratio (χ^2/df) and other goodness-of-fit indicators [45]. A (χ^2/df) of 1.81 is considered very good, as it is below the recommended ratio of 3 or less (Hoe, 2008) and even below the more conservative ratio of 2 or less [46]. Further, the value for RMSEA is 0.034, well below the threshold of 0.08. The same is true for the SRMR of 0.017, below the conservative threshold of 0.05 (Hair et al., 2014). CFI is 0.997, which exceeds the recommended higher value of 0.94 for CFI [46]. Other goodness-of-fit measures also have satisfactory values (TLI = 0.995 > 0.95; GFI = 0.987 > 0.95), indicating that the measurement model fits the data well [45].

Table 7. The goodness-of-fit indicators for the measurement model evaluation.

	ML Estimate	Acceptable Value	Source
Chi-square (χ^2)	701	-	-
Degrees of freedom (*df*)	43.438	-	-
p-value	24	-	-
Chi-square (χ^2)	0.009	-	-
CFI	0.997	>0.94	[46]
TLI	0.995	>0.95	[45]
GFI	0.987	>0.95	[45]
RMSEA	0.034	<0.08	[45]
SRMR	0.017	<0.05	[45]

Source: Authors' work, based on a survey, January 2022.

Since the fit of the overall model was satisfactory, we proceeded with the estimates of the factor loadings presented in Table 8. Factor loadings are correlation coefficients between the manifest variable and the latent factor/construct, thus indicating how well the variable represents the construct. The higher the loading, the more representative the variable is of the factor. All unstandardised loading estimates are statistically significant, which is required to establish convergent validity. In addition, all standardised factor loadings are higher than the ideal or preferred value of 0.7 or greater [45]. Therefore, the results confirm that the variables represent their latent factor well.

Table 8. Unstandardised factor loadings, standardised factor loadings, average variance extracted, and composite reliability.

Factor	Indicator	Symbol	Est.	Std. Est.	Std. Error	z-Value	R-Squared	AVE	CR
Self-efficacy	C11_1	λ11	2.233	0.949	0.066	33.600 *	0.900	0.891	0.976
	C11_2	λ12	2.226	0.944	0.067	33.315 *	0.892		
	C11_3	λ13	2.201	0.938	0.067	32.920 *	0.880		
Social influence	C11_4	λ21	1.942	0.889	0.066	29.305 *	0.790	0.760	0.972
	C11_5	λ22	1.913	0.880	0.066	28.847 *	0.775		
	C11_6	λ23	1.803	0.846	0.067	27.091 *	0.715		
Social support	C11_7	λ31	2.103	0.921	0.066	31.626 *	0.849	0.841	0.974
	C11_8	λ32	2.121	0.917	0.068	31.363 *	0.840		
	C11_9	λ33	2.131	0.913	0.068	31.162 *	0.834		

Note: * statistically significant at 1%. Source: Authors' work, based on a survey, January 2022.

Additionally, we calculated the AVE and the CR to investigate convergent validity further. The coefficient of construct reliability (CR) is analogous to the coefficient alpha and is commonly used to estimate reliability in the CFA–SEM method (Hair et al., 2014). CR is above the threshold of 0.7 for all latent variables, indicating adequate internal consistency of the item scales. Finally, we estimated the average variance extracted (AVE) because it is a more stringent criterion for internal consistency. AVE estimates for each construct exceed the recommended minimum value of 0.5 [45]. Since all estimates of factor loadings, construct reliability (CR), and average variance extracted (AVE) exceed the recommended minimums of 0.7, 0.7, and 0.5, respectively, convergent validity was confirmed.

We apply a widely used approach to assess discriminant validity recommended by [46], also known as the Fornell–Larcker criterion. According to this criterion (Table 9), the AVE estimate for a given factor should be higher than the squared inter-construct correlations related to that factor. Since all diagonal elements (AVE) are higher than the corresponding (underlying) off-diagonal elements (squared inter-construct correlations), we can conclude that the discriminant validity of our measurement model has also been demonstrated.

Table 9. Factor squared inter-construct correlations and average variance extracted estimate.

	Self-Efficacy	Social Influence	Social Support
Self-efficacy	**0.891**		
Social influence	0.465	**0.760**	
Social support	0.380	0.520	**0.841**

Note: AVE estimate for a given factor (in bold). Source: Authors' work, based on a survey, January 2022.

4.5. Structural Equation Modelling

While the measurement model assessment indicates how well the manifest (measured) variables represent the latent variables (constructs), the structural model assessment in SEM is used to examine the relationships between the constructs, i.e., the structure of the model. Because the measurement model for our data showed strong convergent and discriminant validity, we proceeded to evaluate the proposed structural model of the research.

First, we assessed the fit of the model using goodness-of-fit indicators. Then, we moved to path analysis to test the proposed hypothesis. This step applied the SEM procedure to the entire sample, while parameter estimates were obtained using the maximum likelihood method (ML) of covariance matrices. A one-factor loading estimate was set to 1 for each construct to determine the latent factor scale.

Table 10 provides estimates of the commonly used indices for evaluating the structural model.

Table 10. Goodness-of-fit indicators for the structural model evaluation.

Indicator	Estimated Value	Recommended Value	Source
N	701	-	-
Chi-square (χ^2)	58.820	-	-
Degrees of freedom (*df*)	36	-	-
p-value	0.010	-	-
Chi-square statistic ratio (χ^2/df)	1.634	<2	[45]
CFI	0.997	>0.94	[46]
TLI	0.995	>0.95	[45]
NNFI	0.995	>0.9	[50]
NFI	0.992	>0.9	[50]
RMSEA	0.030	<0.07	[45]
SRMR	0.014	<0.08	[45]

Source: Authors' work, based on a survey, January 2022.

As can be seen, all indicators met the requirements for the acceptable values for a good model fit. The ratio of the Chi-square statistic (χ^2/df) is 1.634, well below the benchmark ratio of 3 to 1 [50] and even below the more conservative maximum ratio of 2 [45]. Other absolute fit indices, RMSEA and SRMR, are also well below the maximum thresholds of 0.07 and 0.08, respectively. The incremental fit indices, namely CFI, TLI, NFI, and NNFI, are also in the acceptable range of 0.95 or more [45]. Moreover, all incremental indices have values close to 1, indicating the model's strong structural validity.

Since the goodness-of-fit indicators pointed out a sound specification of our model, we were able to proceed with the path analysis to test whether the hypothesised theoretical relationships among the constructs applied to our research context. The path analysis is shown in Table 11.

Table 11. Standardised path coefficients and squared multiple correlation coefficient.

Predictor	Outcome	Estimate (Std. Error)	z-Value	*p*	R-Squared	Hypothesis
Social influence	Self-efficacy	0.522 (0.051)	10.230	<0.001 ***	0.500	H1
Social support	Self-efficacy	0.277 (0.047)	5.823	<0.001 ***		H2
Social support	Social influence	0.694 (0.033)	20.830	<0.001 ***	0.517	H3
Self-efficacy	Intensity of Internet usage	0.912 (0.035)	26.046	<0.001 ***	0.720	H4
Social influence	Intensity of Internet usage	−0.052 (0.043)	−1.209	0.227		H5
Social support	Intensity of Internet usage	0.025 (0.037)	0.656	0.512		H6
Self-efficacy	Obstacles to Internet usage	−0.279 (0.059)	−4.723	<0.001 ***	0.039	H7
Social influence	Obstacles to Internet usage	0.177 (0.077)	2.312	0.021 **		H8
Social support	Obstacles to Internet usage	−0.008 (0.066)	−0.120	0.905		H9

Note: *** statistically significant at 1%: ** 5%. Source: Authors' work, based on a survey, January 2022.

As expected, significant and positive relationships were found between social influence and self-efficacy (H1); social support and self-efficacy (H2); and social influence and social support (H3).

The path coefficient is positive and significant at 1% for the relationship between the intensity of Internet usage and self-efficacy (H4), with a path coefficient of 0.912 and $p < 0.01$. In contrast, the significance of the path coefficients between the intensity of

Internet usage on the one side and social influence and social support on the other side was not demonstrated in the model of our research (H5 and H6, respectively).

The path coefficient is negative and significant at 1% for the relationship between obstacles in Internet usage and self-efficacy, with a path coefficient of −0.279, with $p < 0.01$, indicating a strong negative correlation between these two variables (H7). The path between obstacles in Internet usage and social influence has an estimated value of 0.177, with $p < 0.05$ indicating a significant positive relationship between the two constructs at 5%. However, H8 was not confirmed because the relationship direction was different than expected (positive instead of negative). In addition, the relationship was not significant between obstacles in Internet usage and social support (H9).

5. Discussion

Table 12 summarises research results in the context of hypothesis testing. The path analysis confirmed the hypothesised theoretical relationships in the structural model for six hypotheses, namely H1, H2, H3, H4, H7, and H9, while hypotheses H5, H6, and H7 were not supported.

Table 12. Summary of research hypothesis conclusions.

Hypothesis	Predictor	Outcome	Relationship	Conclusion
H1	Social influence	Self-efficacy	Positive at 1%	H1—Confirmed
H2	Social support	Self-efficacy	Positive at 1%	H2—Confirmed
H3	Social influence	Social support	Positive at 1%	H3—Confirmed
H4	Self-efficacy	Intensity of Internet usage	Positive at 1%	H4—Confirmed
H5	Social influence	Intensity of Internet usage	Not significant	H5—Not confirmed
H6	Social support	Intensity of Internet usage	Not significant	H6—Not confirmed
H7	Self-efficacy	Obstacles to Internet usage	Negative at 1%	H7—Confirmed
H8	Social influence	Obstacles to Internet usage	Positive at 5%	H8—Not confirmed
H9	Social support	Obstacles to Internet usage	Not significant	H9—Not confirmed

Source: Authors' work, based on a survey, January 2022.

Concerning the determinants of the model of Internet usage among older people, the results imply that the opinions of family, relatives, and friends about using the Internet (measured by social influence) are associated with the personal attitude of each elderly user about the pleasure and simplicity of using the Internet (measured by self-efficacy) as well as the support of their family, friends, and acquaintances in using the Internet, which confirms hypotheses H1 and H3. Generally, from the definition of social influence, it can be explained how social influence is related to forming individual thoughts, opinions, feelings, and behaviour about using s-commerce (e-commerce using social media) due to the individual's interactions with his environment [20,52]. According to [53], the perception and expectations of family, friends, relatives, media, and community in general in Internet usage strongly affect forming individuals' attitudes, interests, and opinions toward Internet usefulness and quality; this is in line with the confirmed hypothesis H1. Also, this finding aligns with [22], whose results show how social influence impacts computer self-efficacy among seniors. According to different authors [20,54,55], social influence encourages people to acquire new knowledge, solve problems to meet other people's expectations, be socially involved, and improve self-perception, which will consequently impact the need for a higher level of social support and more intensive social interactions. Such conclusions can support the examined and confirmed hypothesis H3.

Similarly, hypothesis H2 is confirmed by showing how social support provided by the social environment in which the seniors interact also positively influences the seniors' self-efficacy in using the Internet. The given result from the hypothesis H2 is in line with the previous study [31], in which they emphasise how to continue realising one's own positive opinion of information and communication technology: the encouragement and support of the environment are extremely important. Moreover, the finding obtained from hypothesis

H2 can be confirmed by [22], who also emphasises the influence of social support on computer self-efficacy among elderly users of information and communication technology.

Concerning the determinants of intensity of Internet usage, the results suggest that the consumption of Internet content and the use of electronic services for older people (measured by the intensity of Internet usage) can be explained by their abilities and perceived comfort in navigating the Internet (measured by self-efficacy), thus confirming H4. At the same time, it is not influenced by incentives or support coming from their close peers (measured by social influence and social support), thus not confirming H5 and H6. The obtained result from the H4 hypothesis is also confirmed in the existing literature. For instance, Ref. [56] also proved the importance of self-efficacy on the intensity of Internet usage. Likewise, Ref. [57] also confirmed how higher self-efficacy in general Internet and communication Internet usage positively influences informational Internet activities among non-expert users.

Moreover, in their study, Ref. [23] stresses how self-efficacy is directly linked to higher intention in e-Health application usage. The result from hypothesis H5 is in line with other studies confirming that accepting and using new technology has not been influenced by the individual perception and knowledge of how others from their environment use the same technology [58]. According to [59], social support can be classified into three categories: (i) providing emotional support, (ii) providing support in the context of information and advice, and (iii) providing support in the context of help with daily tasks or finances. Given that the Internet has become a part of everyday life, it can be considered that providing support around the Internet is instrumental; it has been shown in research to cause a higher level of depression among the elderly population [59–61]. Moreover, receiving received, and not just perceived, social support in some studies resulted in higher levels of emotional stress among respondents due to potential negative social interactions, conflicts, and feelings of dependence on others that can accompany support from other people [59–61]. Therefore, such results of previously conducted studies can support the findings for hypothesis H6.

Concerning the determinants of the obstacles in Internet usage, the results indicate that the obstacles for older people, similar to the intensity of Internet usage, can be explained by the level of personal ability and comfort of using the Internet (measured by self-efficacy). The obtained result from hypothesis H7 is also proved by [62], in which the authors argue how individuals with a higher level of self-efficacy perceive difficulties as less challenging than individuals with a lower level of self-efficacy; this consequently enables them to overcome obstacles more easily. The social influence of the immediate environment has a counterintuitive positive effect on obstacles in Internet usage, indicating that higher social support increases anxiety in Internet usage, resulting in a higher perception of obstacles in Internet usage. The association of social support with obstacles in Internet usage was not confirmed. These findings about hypothesis H8 suggest that, as [63] points out, social influence has a strong relationship with causing anxiety when using Internet services, for instance, social media. The findings based on the result of hypothesis H9 can be related to the result of hypothesis H6 and, therefore, explained by the fact that potential social support can cause a feeling of dependence on others by older people who would potentially like to independently solve the challenges they encounter by using the Internet. Moreover, such an explanation can also be supported by the confirmation of hypothesis 4, which showed that for seniors, their personal opinions about the comfort and ease of use of the Internet are significant for deciding to use it more intensively. Also, such findings can suggest that the sampled seniors are computer-literate enough to use the Internet independently. Figure 3 presents the summary of the testing of research model.

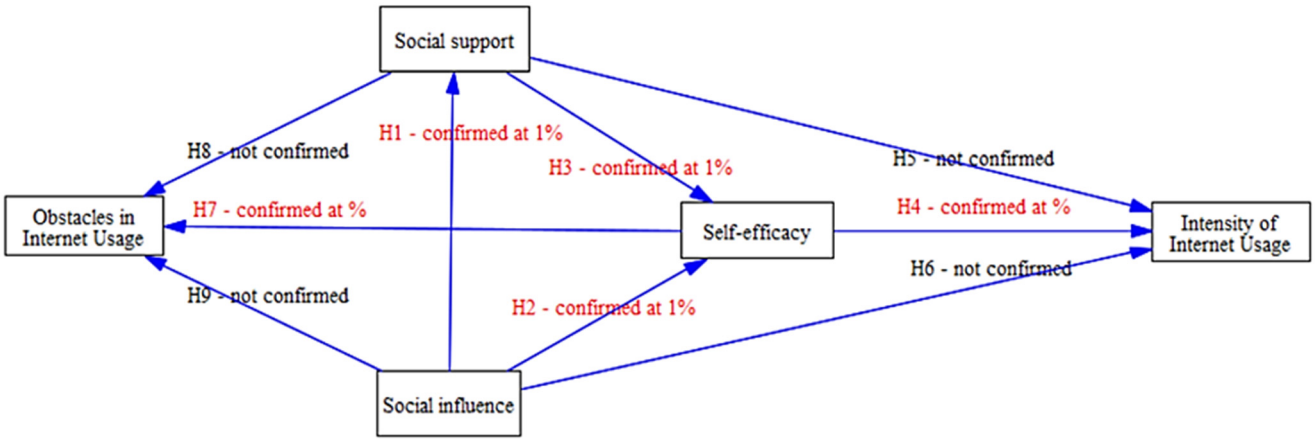

Figure 3. Summary of the testing research model; Source: Authors' work, survey, January 2022.

6. Conclusions

6.1. Summary of the Research

In recent decades, developed nations have observed two significant trends: a growing number of senior citizens and a rapid integration of ICT. This study delves into how self-efficacy, social support, and influence affect Internet usage among Croatian senior citizens. The research aimed to show the extent to which social influence, self-efficacy, and social support are associated with the intensity of Internet use and reducing barriers to Internet use among older users. Through survey research and structural equation modelling, it was found that self-efficacy positively impacts the intensity of Internet usage while also reducing related obstacles. Social influence directly lessens these obstacles and indirectly affects Internet usage intensity via self-efficacy. Meanwhile, social support indirectly influences the intensity of Internet usage. These findings underscore the importance of educational programs that boost seniors' perceived self-efficacy in Internet usage.

6.2. Theoretical Implications

The work presented in this study has significant theoretical implications as it contributes to the current body of literature investigating characteristics that facilitate the use of information and communication technology (ICT) among older individuals. It also enhances our understanding of the impact of social influence, social support, and self-efficacy within this context. The theoretical contributions of this study offer a thorough comprehension of the various elements that impact the utilisation of the Internet by older individuals. These contributions highlight the significance of social influence, social support, and self-efficacy in shaping Internet usage patterns among this demographic.

The study's findings establish a correlation between the viewpoints of family members, relatives, and friends towards Internet usage and the personal attitudes of senior individuals towards the enjoyment and ease of using the Internet. This finding aligns with other scholarly investigations that emphasise the role of social influence in shaping individuals' attitudes and behaviours regarding s-commerce and Internet use.

The study additionally validates that social support derived from the surrounding context has a favourable impact on the self-efficacy of older individuals in utilising the Internet. This finding is consistent with other research that underscores the significance of contextual factors in fostering favourable attitudes towards information and communication technologies.

The prevalence of Internet usage among older adults can be attributed to their self-efficacy, while social influence and social support do not appear to have a significant impact. This discovery aligns with other studies that emphasise the significance of self-efficacy in determining the level of Internet usage and the acceptance of e-Health applications.

The challenges encountered by elderly individuals in utilising the Internet can be ascribed to their level of self-efficacy. Individuals with elevated levels of self-efficacy tend

to regard difficulties as less formidable and are more adept at surmounting them. It is noteworthy that evidence suggests that increased levels of social support can potentially contribute to heightened anxiety in Internet usage, resulting in an amplified impression of barriers. This indicates that using Internet services may lead to anxiety due to social influence. At the same time, the senior population may experience feelings of dependence due to potential social assistance.

The results indicate that the seniors who participated in the research have sufficient computer literacy that enables them to utilise the Internet autonomously. The individual's subjective viewpoints regarding the convenience and user-friendliness of Internet usage substantially influence their inclination to engage with it more extensively.

In conclusion, this study's findings indicate a notable positive correlation between social impact, social support, and older adults' self-efficacy. Additionally, the findings indicated a strong correlation between the social influence experienced by older Internet users and the level of support received from their family, friends, and relatives. In contrast, of the three criteria examined concerning the intensity of Internet usage among older individuals, only self-efficacy has demonstrated a statistically significant positive correlation. Moreover, based on the findings of the conducted research, it is evident that self-efficacy is the sole factor that exhibits a substantial negative impact on the difficulties encountered during Internet usage. Furthermore, it was shown that social influence exhibited a significant correlation with the obstacles encountered by older individuals in utilising the Internet.

6.3. Practical Implications

The practical consequences of this study are the potential adaptation of Internet service providers' functionality to cater to the needs of older customers, hence facilitating their inclusion in the dynamic realm of digitalisation.

The importance of self-efficacy in influencing the extent and challenges associated with Internet usage among older adults necessitates the development of customised educational initiatives. The primary objective of these programmes should be to improve seniors' self-assurance and proficiency in utilising the Internet, fostering a sense of competence and reducing apprehension about digital obstacles.

Given that the attitudes of older individuals regarding Internet usage are influenced by the perspectives of their family members, relatives, and friends, it is imperative to engage these social groups in any digital literacy initiative. Organising workshops or instructional sessions can facilitate the participation of senior individuals and their close companions, fostering a conducive environment for elderly individuals to acquire knowledge and adjust accordingly.

The findings of this study may serve as a significant foundation for mental health interventions, as they suggest that while social support can have positive effects, an excessive amount of assistance or reliance on others can result in increased anxiety and a heightened perception of barriers. Considering the potential anxiety often linked to Internet services, particularly social media, it is advisable for practical programmes to integrate modules that specifically target these concerns. The curriculum may encompass instructional modules about various aspects of digital safety, including but not limited to online security measures, privacy management mechanisms, and fostering constructive online engagements.

Future projects and initiatives may be directed towards advancing user-friendly digital platforms. The prioritisation of user-friendly platforms by tech companies and service providers is crucial in facilitating the uptake of the Internet among seniors, as personal perceptions regarding comfort and ease of use significantly influence their decision-making process. Simplified interfaces, increased text size, intuitive designs, and comprehensive training can potentially enhance digital accessibility for older individuals. These platforms have the potential to incorporate an automatic feedback mechanism, which would assist educators and programme organisers in comprehending the distinct requirements, obstacles, and preferences of senior participants. This measure can guarantee the continued relevance and efficacy of digital literacy programmes.

One potential strategy for disseminating information to the general public regarding the potential beneficial impact they can have on the digital journeys of elderly individuals is implementing awareness campaigns. By comprehending the significant impact of social influence, individuals can adopt a proactive approach to promoting and directing the elderly within their social networks.

Ultimately, establishing support groups and communities for seniors to share their experiences, concerns, and solutions pertaining to Internet usage can prove advantageous. These platforms have the potential to provide chances for peer-to-peer learning, thereby mitigating feelings of loneliness and fostering a sense of community among older individuals who use the Internet.

By integrating these practical implications into strategies and programmes, there is a notable potential to enhance the digital experience for older adults. This enhancement would result in increased Internet usage and instil a sense of confidence and ease while navigating online platforms.

6.4. Limitations and Future Research Directions

First, the primary limitation of this study is its geographic scope. The sample was drawn exclusively from one country, which may not represent senior citizens' experiences and attitudes in other cultural or socio–economic contexts. Second, the sample predominantly consisted of urban and highly educated elderly individuals. This demographic bias may have influenced the results, as urban and educated seniors might have different levels of exposure, comfort, and proficiency with the Internet compared to their rural or less-educated counterparts. The third limitation stems from the cross-sectional design. The study's design captures a snapshot in time without tracking changes or evolutions in attitudes and behaviours, which limits the ability to infer causality or observe how perceptions and usage patterns might evolve.

Directions for future research include the following: First, to enhance the generalisability of the findings, future research should consider a multi-country approach, considering significant differences between European countries according to the level of digital transformation [64]. Comparing results across countries can provide insights into cultural, economic, or infrastructural factors influencing seniors' Internet usage. Second, given the urban and educated bias in the current study, future research should deliberately include participants from rural areas and diverse educational backgrounds, offering a more comprehensive understanding of the challenges and motivations across different demographic groups. Third, implementing a longitudinal design can help track changes in seniors' Internet usage and attitudes over time, which would be particularly valuable in understanding the long-term effects of interventions or the impact of rapidly evolving digital landscapes on the elderly. Fourth, as recommended, in-depth interviews and case studies can provide richer, more nuanced insights into seniors' experiences and challenges with the Internet. Qualitative research can uncover deeper motivations, fears, and barriers that might not be evident in survey data. Finally, future research directions could cover the diverse digital platforms and support systems. Future studies could explore seniors' interactions with various digital platforms, not just the Internet, including mobile apps, smart home devices, and other emerging technologies, to understand their adaptability and challenges in a broader digital context. Given the importance of social influence and support in the current study, future research could delve deeper into the role of different support systems, like community centres, tech workshops, or peer-led groups, in enhancing digital literacy among seniors.

Author Contributions: Conceptualization, M.P.B. and V.B.V.; methodology, M.P.B.; software, M.P.B.; validation, M.P.B., V.B.V. and L.M.G.; formal analysis, L.I.; investigation, M.P.B. and V.B.V.; resources, V.B.V.; data curation, V.B.V.; writing—original draft preparation, L.I. and A.-M.S.; writing—review and editing, V.B.V. and M.P.B.; visualisation, M.P.B.; supervision, V.B.V. All authors have read and agreed to the published version of the manuscript.

Funding: This research has been funded within the project "Senior 2030—Thematic Network for Active Ageing Policy in Croatia", funded by the European Social Fund.

Institutional Review Board Statement: Not applicable.

Informed Consent Statement: Not applicable.

Data Availability Statement: Data are available from the authors upon request.

Acknowledgments: This research has been conducted within the project "Senior 2030—Thematic Network for Active Ageing Policy in Croatia", funded by the European Social Fund.

Conflicts of Interest: The authors declare no conflict of interest.

References

1. Barišić, A.F.; Pejić Bach, M.; Miloloža, I. Human Resources Information Systems: Transactional and Strategic Paradigm. *ENTRENOVA—ENTerprise REsearch InNOVAtion* **2018**, *4*, 224–230.
2. Barišić, A.F.; Rybacka Barišić, J.; Miloloža, I. Digital Transformation: Challenges for Human Resources Management. *ENTRENOVA—ENTerprise REsearch InNOVAtion* **2022**, *7*, 357–366. [CrossRef]
3. Park, J.R.; Feng, Y. Trajectory tracking of changes digital divide prediction factors in the elderly through machine learning. *PLoS ONE* **2023**, *18*, e0281291. [CrossRef]
4. Jiao, R. Is There a Barrier between Seniors and Smartphone Use in The Internet Age? A Study of Digital Disconnection among Older Adults. *SHS Web Conf.* **2023**, *155*, 03010. [CrossRef]
5. Sum, S.; Mathews, R.M.; Hughes, I.; Campbell, A. Internet use and loneliness in older adults. *CyberPsychol. Behav.* **2008**, *11*, 208–211. [CrossRef]
6. van Houwelingen, C.T.; Ettema, R.G.; Antonietti, M.G.; Kort, H.S. Understanding older people's readiness for receiving telehealth: Mixed-method study. *J. Med. Internet Res.* **2008**, *20*, e8407. [CrossRef]
7. Xie, B. Older Chinese the Internet and well-being. *Care Manag. J.* **2007**, *8*, 33–38. [CrossRef]
8. Maaß, W. The elderly and the Internet: How senior citizens deal with online privacy. In *Privacy Online: Perspectives on Privacy and Self-Disclosure in the Social Web*; Springer: Berlin, Germany, 2011; pp. 235–249.
9. Croatian Bureau of Statistics. Population Estimate of Republic of Croatia. 2022. Available online: https://podaci.dzs.hr/en/statistics/population/ (accessed on 1 July 2023).
10. Drobne, S.; Bogataj, M. Migration flows through the lens of human resource ageing. *Bus. Syst. Res. Int. J. Soc. Adv. Innov. Res. Econ.* **2022**, *13*, 47–62. [CrossRef]
11. Nejašmić, I.; Toskić, A. Starenje stanovništva u Hrvatskoj–sadašnje stanje i perspektive. *Hrvat. Geogr. Glas.* **2013**, *75*, 89–110. [CrossRef]
12. Garbin Praničević, D.; Peterlin, J.; Bućan, M.J. Do older people benefit from digital services? *DIEM Dubrov. Int. Econ. Meet.* **2017**, *3*, 145–160.
13. Bosilj Vukšić, V.; Milanović Glavan, L.; Ivančić, L. Digital Technology in the Health Care and Social Care of Older Adults. In Proceedings of the 4th International Conference on the Economics of Decoupling (ICED), Zagreb, Croatia, 30 November–1 December 2022; pp. 189–202.
14. Rashotte, L. Social Influence. In *The Blackwell Encyclopedia of Sociology*; John Wiley & Sons, Ltd.: Chichester, UK, 2007.
15. Friedkin, N.E.; Johnsen, E.C. Social influence and opinions. *J. Math. Sociol.* **1990**, *15*, 193–206. [CrossRef]
16. Vries, H.D.; Backbier, E.; Kok, G.; Dijkstra, M. The Impact of Social Influences in the Context of Attitude Self-Efficacy Intention and Previous Behavior as Predictors of Smoking Onset 1. *J. Appl. Soc. Psychol.* **1995**, *25*, 237–257. [CrossRef]
17. Bandura, A. *Social Foundations of Thought and Action: A Social Cognitive Theory*; Prentice-Hall: New York, NY, USA, 1986.
18. Maddux, J.E.; Gosselin, J.T. Self-efficacy. In *Handbook of Self and Identity*; Leary, M.R., Tangney, J.P., Eds.; The Guilford Press: Ney Work City, NY, USA, 2012; pp. 198–224.
19. Bandura, A.; Wessels, S. *Self-Efficacy*; W.H. Freeman & Company: New York, NY, USA, 1997.
20. Hu, X.; Chen, X.; Davison, R.M. Social support, source credibility, social influence, and impulsive purchase behavior in social commerce. *Int. J. Electron. Commer.* **2019**, *23*, 297–327. [CrossRef]
21. Taylor, S.E. Social support: A review. In *The Oxford Handbook of Health Psychology*; Friedman, H.S., Ed.; Oxford University Press: Oxford, UK, 2011; pp. 189–214.
22. Guan, C.; Wei, J.; Chan, C.M.; Chia, A.B. Senior citizens' self-efficacy for ICT use: The influence of gender, social influence and social support. In Proceedings of the International Conference on Electronic Business (ICEB), Dubai, United Arab Emirates, 4–8 December 2017; pp. 234–240.
23. de Veer, A.J.; Peeters, J.M.; Brabers, A.E.; Schellevis, F.G.; Rademakers, J.J.; Francke, A.L. Determinants of the intention to use e-Health by community dwelling older people. *BMC Health Serv. Res.* **2015**, *15*, 103. [CrossRef]
24. Hsieh, J.J.P.-A.; Rai, A.; Keil, M. Addressing digital inequality for the socioeconomically disadvantaged through government initiatives: Forms of capital that affect ICT utilisation. *Inf. Syst. Res.* **2011**, *22*, 233–253. [CrossRef]

25. Eastin, M.S.; LaRose, R. Internet self-efficacy and the psychology of the digital divide. *J. Comput.-Mediat. Commun.* **2000**, *6*, JCMC611. [CrossRef]
26. Ehrari, H.; Ulrich, F.; Andersen, H.B. Concerns and trade-offs in information technology acceptance: The balance between the requirement for privacy and the desire for safety. *Commun. Assoc. Inf. Syst.* **2020**, *47*, 46. [CrossRef]
27. Hamari, J.; Koivisto, J. Working out for likes: An empirical study on social influence in exercise gamification. *Comput. Hum. Behav.* **2015**, *50*, 333–347. [CrossRef]
28. Venkatesh, V.; Morris, M.G.; Davis, G.B.; Davis, F.D. User acceptance of information technology: Toward a unified view. *MIS Q.* **2003**, *27*, 425–478. [CrossRef]
29. Heo, J.; Chun, S.; Lee, S.; Lee, K.H.; Kim, J. Internet use and well-being in older adults. *Cyberpsychol. Behav. Soc. Netw.* **2015**, *18*, 268–272. [CrossRef]
30. Wu, H.; Rudkin, L. Social contact socio-economic status and the health status of older Malaysians. *Gerontologist* **2000**, *40*, 228–234. [CrossRef] [PubMed]
31. Tsai, H.S.; Shillair, R.; Cotten, S.R. Social support and "playing around": An examination of how older adults acquire digital literacy with tablet computers. *J. Appl. Gerontol.* **2017**, *36*, 29–55. [CrossRef] [PubMed]
32. Barnard, Y.; Bradley, M.D.; Hodgson, F.; Lloyd, A.D. Learning to use new technologies by older adults: Perceived difficulties, experimentation behaviour and usability. *Comput. Hum. Behav.* **2013**, *29*, 1715–1724. [CrossRef]
33. Bandura, A. Self-efficacy mechanisms in human agency. *Am. Psychol.* **1982**, *37*, 122–147. [CrossRef]
34. Akhter, H.S. Privacy concern and online transactions: The impact of internet self-efficacy and internet involvement. *J. Consum. Mark.* **2014**, *31*, 118–125. [CrossRef]
35. Matsuo, M.; Minami, C.; Matsuyama, T. Social influence on innovation resistance in internet banking services. *J. Retail. Consum. Serv.* **2018**, *45*, 42–51. [CrossRef]
36. Martinez-Pecino, R.; Matos, A.D.; Silva, P. Portuguese older people and the Internet: Interaction, uses, motivations, and obstacles. *Communications* **2013**, *38*, 331–346. [CrossRef]
37. Rabiee, A.; Nazarian, Z.; Gharibshaeyan, R. An explanation for internet use obstacles concerning e-learning in Iran. *Int. Rev. Res. Open Distrib. Learn.* **2013**, *14*, 361–376. [CrossRef]
38. Van Biljon, J.; Renaud, K. A qualitative study of the applicability of technology acceptance models to senior mobile phone users. In *ER Workshops 2008 LNCS 5232*; Song, I.-Y., Piattini, M., Phoebe Chen, Y.-P., Hartman, S., Grandi, F., Trujillo, J., Opdahl, A.L., Ferri, F., Grifoni, P., Caschera, M.C., et al., Eds.; Springer: Berlin, Germany, 2008; pp. 228–237.
39. Francis, J.; Kadylak, T.; Makki, T.W.; Rikard, R.V.; Cotton, S.R. Catalyst to connection: When technical difficulties lead to social support for older adults. *Am. Behav. Sci.* **2018**, *62*, 1167–1185. [CrossRef]
40. Cohen, S.; Mermelstein, R.; Kamarck, T.; Hoberman, H.M. Measuring the functional components of social support. In *Social Support: Theory, Research and Applications*; Springer: Dordrecht, The Netherlands, 1985; pp. 73–94.
41. Szkody, E.; Stearns, M.; Stanhope, L.; McKinney, C. Stress-buffering role of social support during COVID-19. *Fam. Process* **2021**, *60*, 1002–1015. [CrossRef]
42. OECD Data. Available online: https://data.oecd.org/pop/elderly-population.htm (accessed on 1 July 2023).
43. United Nations, Department of Economic and Social Affairs, Population Division World Population Ageing 2015 (ST/ESA/SER.A/390). 2015. Available online: https://www.un.org/en/development/desa/population/publications/pdf/ageing/WPA2015_Report.pdf (accessed on 1 July 2023).
44. Taylor, S.; Todd, P.A. Understanding Information Technology Usage: A Test of Competing Models. *Inf. Syst. Res.* **1995**, *6*, 144–176. [CrossRef]
45. Hair, J.F.; Black, W.C.; Babin, B.J.; Anderson, R.E. *Multivariate Data Analysis*, 7th ed.; Pearson: London, UK, 2014.
46. Hair, J.F., Jr.; Babin, B.J.; Krey, N. Covariance-Based Structural Equation Modeling in the Journal of Advertising: Review and Recommendations. *J. Advert.* **2017**, *46*, 163–177. [CrossRef]
47. Pejić Bach, M.; Starešinić, B.; Omazić, M.A.; Aleksić, A.; Seljan, S. M-Banking quality and bank reputation. *Sustainability* **2020**, *12*, 4315. [CrossRef]
48. Hu, Z.; Li, J. The Integration of EFA and CFA: One Method of Evaluating the Construct Validity. *Glob. J. Hum. Soc. Sci.* **2015**, *15*, 15–19.
49. Jackson, D.L.; Gillaspy, J.A.; Purc-Stephenson, R. Reporting practices in confirmatory factor analysis: An overview and some recommendations. *Psychol. Methods* **2009**, *14*, 6–23. [CrossRef]
50. Hoe, S.L. Issues and procedures in adopting structural equation modelling technique. *J. Quant. Methods* **2008**, *3*, 76–83.
51. Costello, A.B.; Osborne, J.W. Best practices in exploratory factor analysis: Four recommendations for getting the most from your analysis. *Pract. Assess. Res. Eval.* **2005**, *10*, 7.
52. Amblee, N.; Bui, T.H. The influence of social proof in online shopping: The effect of electronic word of mouth on sales of digital microproducts. *Int. J. Electron. Commer.* **2011**, *16*, 91–114. [CrossRef]
53. Klobas, J.E.; Clyde, L.A. Adults learning to use the Internet: A longitudinal study of attitudes and other factors associated with intended Internet use. *Libr. Inf. Sci. Res.* **2000**, *22*, 5–34. [CrossRef]
54. Bearden, W.O.; Netemeyer, R.G.; Teel, J.E. Measurement of consumer susceptibility to interpersonal influence. *J. Consum. Res.* **1989**, *15*, 473–481. [CrossRef]
55. Fang, X.; Hu, P.J.-H. Top persuader prediction for social networks. *MIS Q.* **2018**, *42*, 82–83. [CrossRef]

56. Lam, J.C.-Y.; Lee, M.K.O. Digital inclusiveness—Longitudinal study of Internet adoption by older adults. *J. Manag. Inf. Syst.* **2006**, *22*, 177–206. [CrossRef]
57. Jokisch, M.R.; Schmidt, L.I.; Doh, M.; Marquard, M.; Wahl, H.W. The role of internet self-efficacy, innovativeness and technology avoidance in breadth of internet use: Comparing older technology experts and non-experts. *Comput. Hum. Behav.* **2020**, *111*, 106408. [CrossRef]
58. Braun, M.T. Obstacles to social networking website use among older adults. *Comput. Hum. Behav.* **2013**, *29*, 673–680. [CrossRef]
59. Kamin, S.T.; Beyer, A.; Lang, F.R. Social support is associated with technology use in old age. *Inf. Commun. Technol.* **2020**, *18*, 369–384. [CrossRef]
60. Reinhardt, J.P.; Boerner, K.; Horowitz, A. Good to have but not to use. Differential impact of perceived and received support on well-being. *J. Soc. Pers. Relat.* **2006**, *23*, 117–129. [CrossRef]
61. Kaul, M.; Lakey, B. Where is the support in perceived support? The role of generic relationship satisfaction and enacted support in perceived support's relation to low distress. *J. Soc. Clin. Psychol.* **2003**, *22*, 59–78. [CrossRef]
62. Lucas, T.; Alexander, S.; Firestone, I.J.; Baltes, B.B. Self-efficacy and independence from social influence: Discovery of an efficacy–difficulty effect. *Soc. Influ.* **2006**, *1*, 58–80. [CrossRef]
63. Abu-Taieh, E.M.; AlHadid, I.; Masa'deh, R.E.; Alkhawaldeh, R.S.; Khwaldeh, S.; Alrowwad, A.A. Factors Affecting the Use of Social Networks and Its Effect on Anxiety and Depression among Parents and Their Children: Predictors Using ML, SEM and Extended TAM. *Int. J. Environ. Res. Public Health* **2022**, *19*, 13764. [CrossRef]
64. Hunady, J.; Pisár, P.; Vugec, D.S.; Pejić Bach, M. Digital Transformation in European Union: North is leading, and South is lagging behind. *Int. J. Inf. Syst. Proj. Manag.* **2022**, *10*, 58–81. [CrossRef]

Disclaimer/Publisher's Note: The statements, opinions and data contained in all publications are solely those of the individual author(s) and contributor(s) and not of MDPI and/or the editor(s). MDPI and/or the editor(s) disclaim responsibility for any injury to people or property resulting from any ideas, methods, instructions or products referred to in the content.