Supplementary Figure 1. Signaling pathways affected by SOX7 induction in MDA-MB-231 cells.

The Affymetrix Human Genome U219 Array strips were used to analyze RNA samples from MDA-MB-231 cells with DOX-induced SOX7 expression. The microarray data were analyzed by the Kyoto Encyclopedia of Genes and Genomes (i.e. KEGG database). The affected pathways are listed below and schematically presented in the following pages. The regulatory genes with POSITIVE fold changes are highlighted in PINK and genes with NEGATIVE fold changes are in GREEN.

List of affected signaling pathways:

1. Apoptosis Pathways
2. p53 Signaling Pathway
3. ERBB Signaling Pathway
4. mTOR Signaling Pathways
5. TGF-β Signaling Pathways
6. Toll-Like Receptor Signaling Pathway
7. JAK-STAT Signaling Pathway
8. Insulin Signaling Pathway
9. MAP Signaling Pathway
10. Chemokine Signaling Pathway
11. Pathways in Cancer
12. Pancreatic Cancer
13. Glioma
14. Bladder Cancer
15. Small Cell Lung Cancer
16. Chronic Myeloid Leukemia
17. Endocytosis
18. Osteoclast Differentiation
19. Focal Adhesion
20. ECM-Receptor Interaction
21. Cell Adhesion Molecules
22. Complement and Coagulation Cascades
23. NOD-Like Receptor Signaling Pathway
24. Hematopoietic Cell Lineage
25. FcγR-Mediated Phagocytosis
26. Type I Diabetes Mellitus
27. Bacterial Invasion of Epithelial Cells
28. Malaria
29. Amoebiasis
30. Measles
31. Influenza A
32. Rheumatoid Arthritis

Apoptosis Pathways

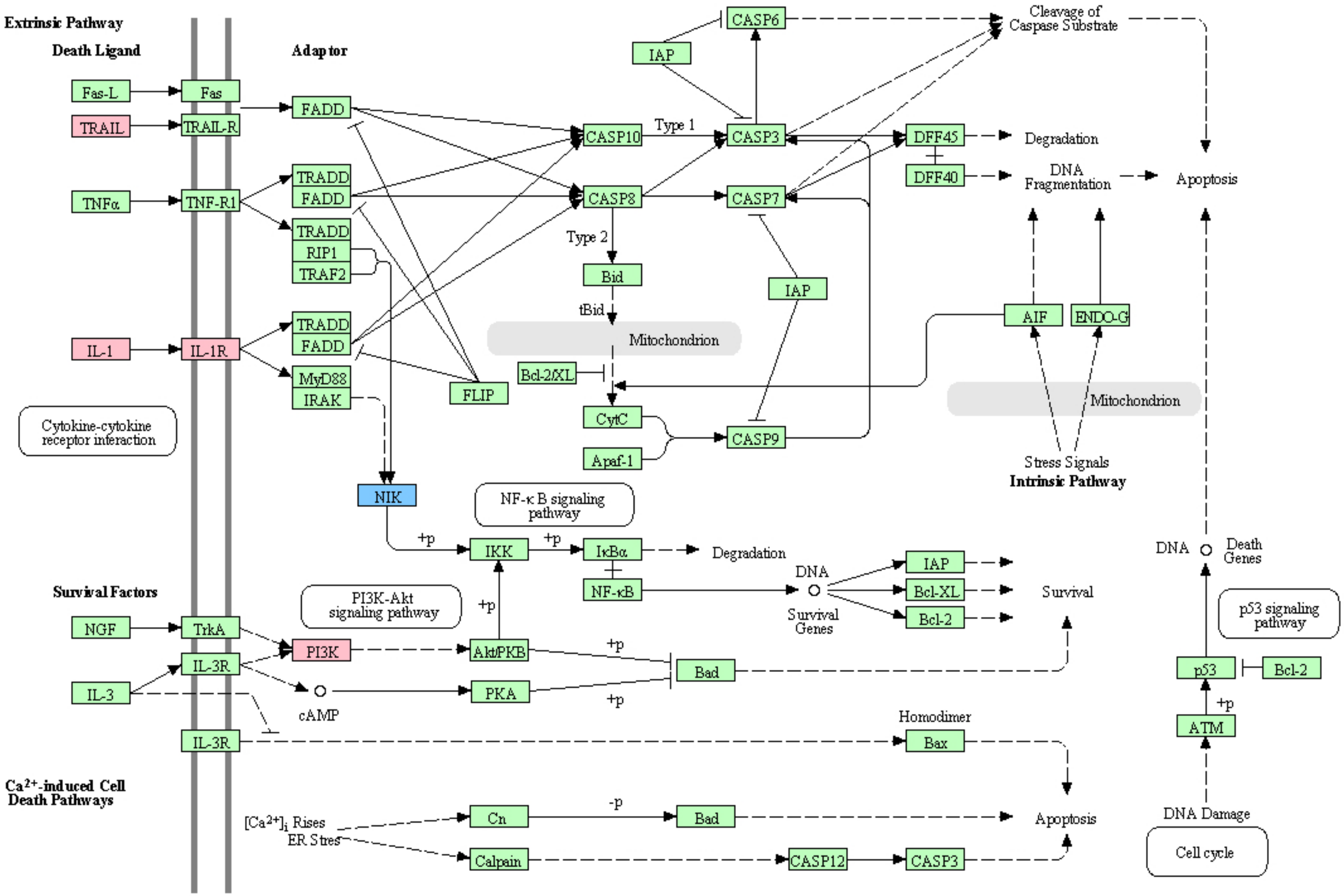

p53 Signaling Pathway

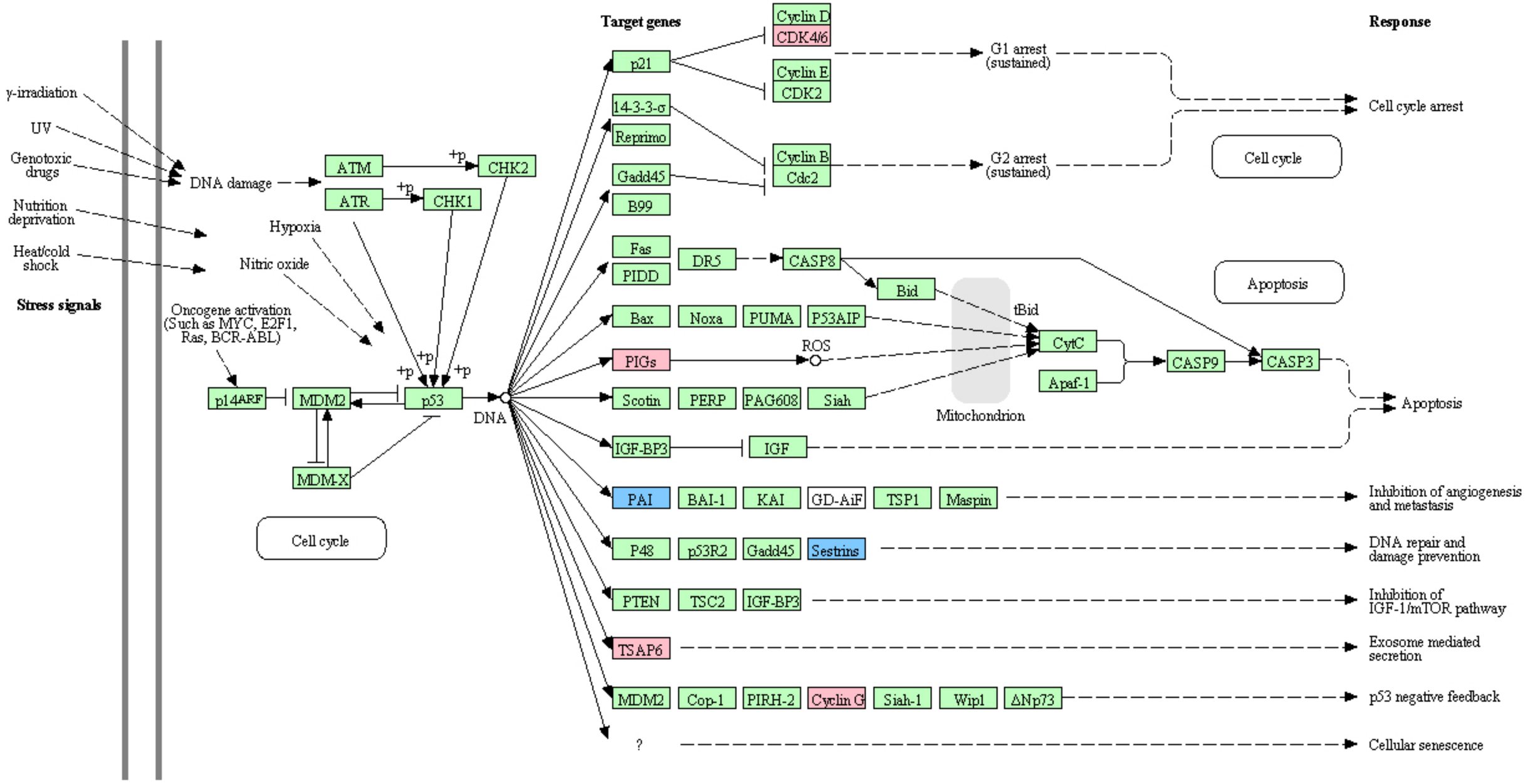

ERBB Signaling Pathway

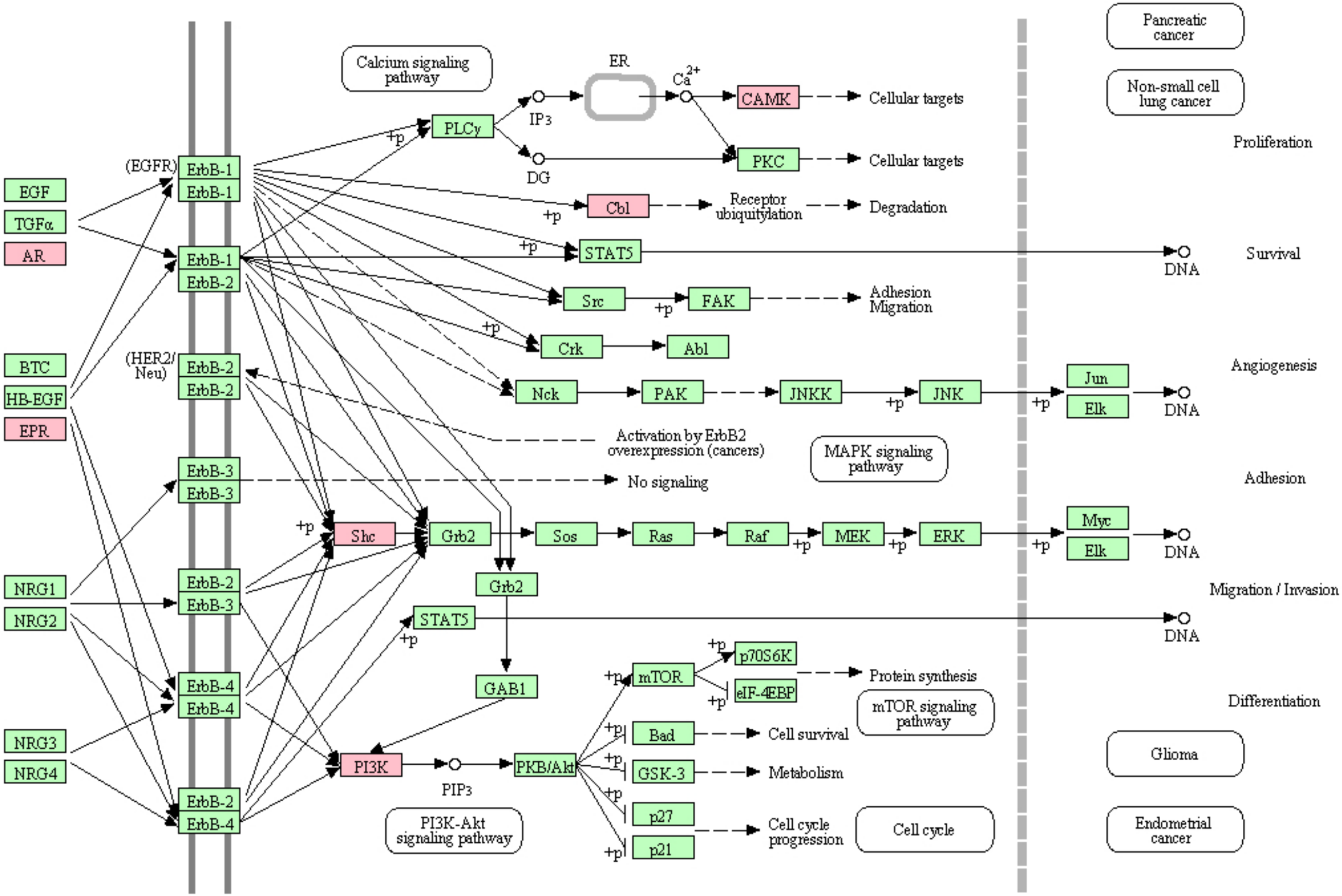

mTOR Signaling Pathways

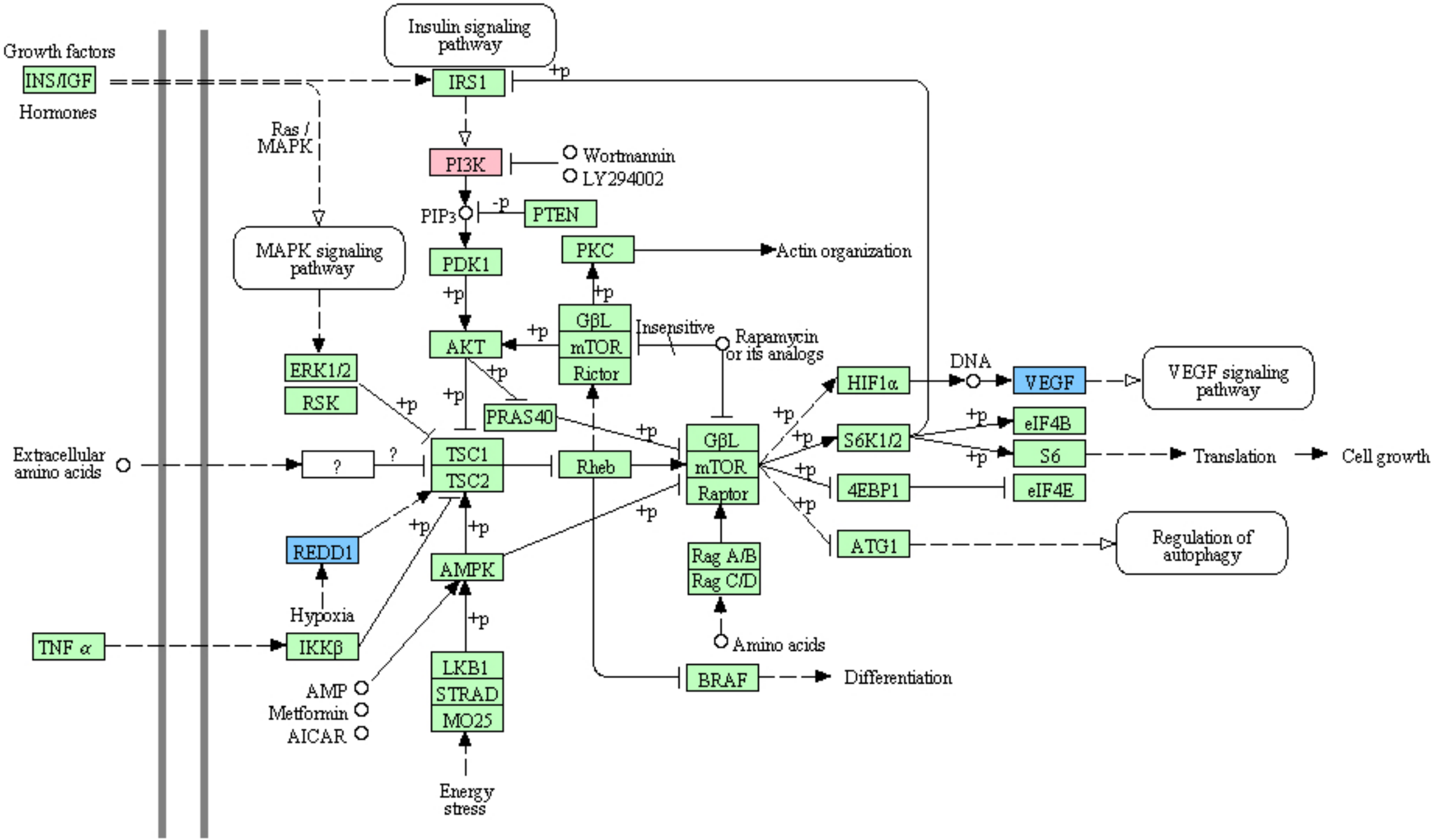

TGF-β Signaling Pathways

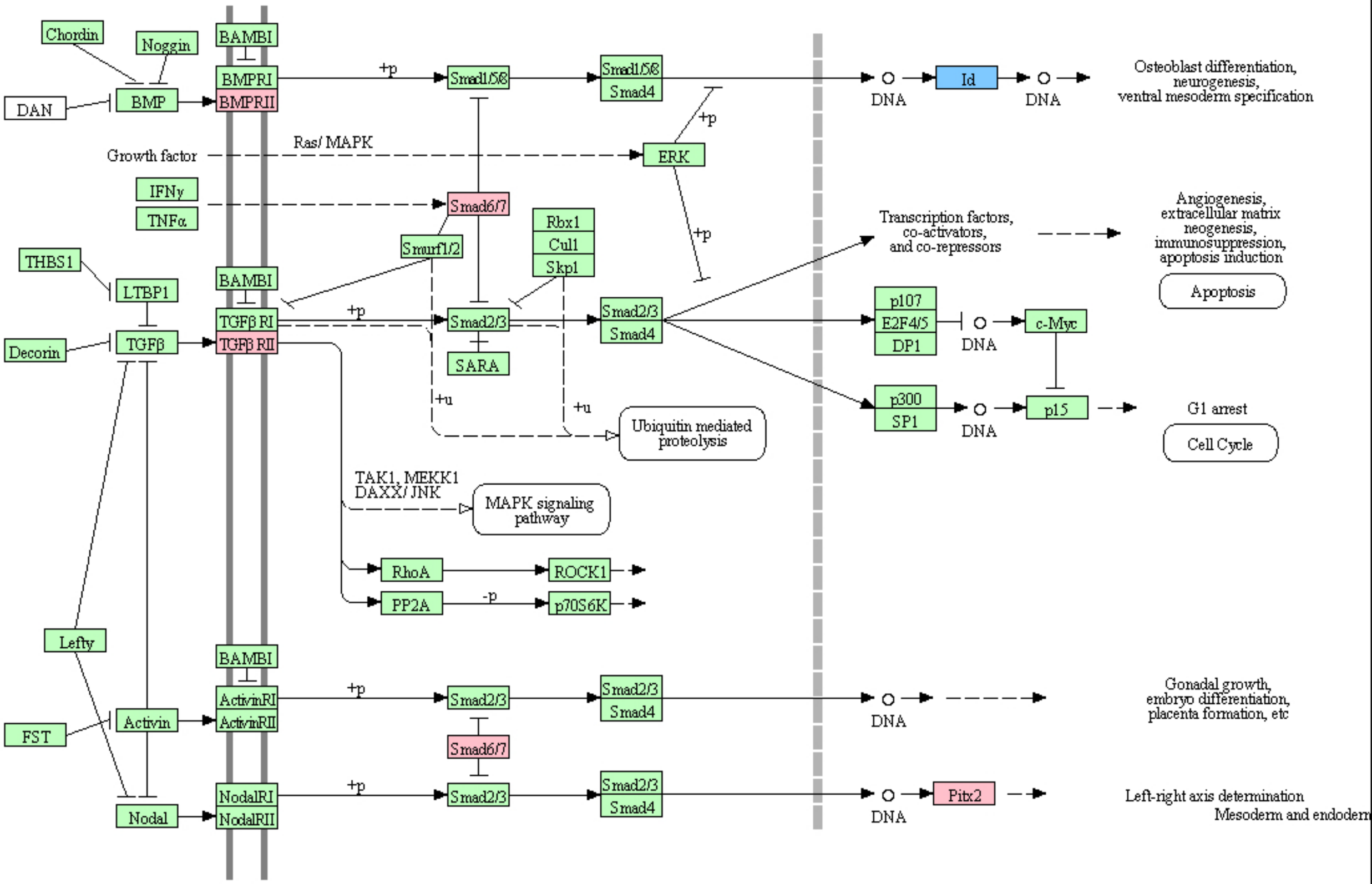

Toll-Like Receptor Signaling Pathway

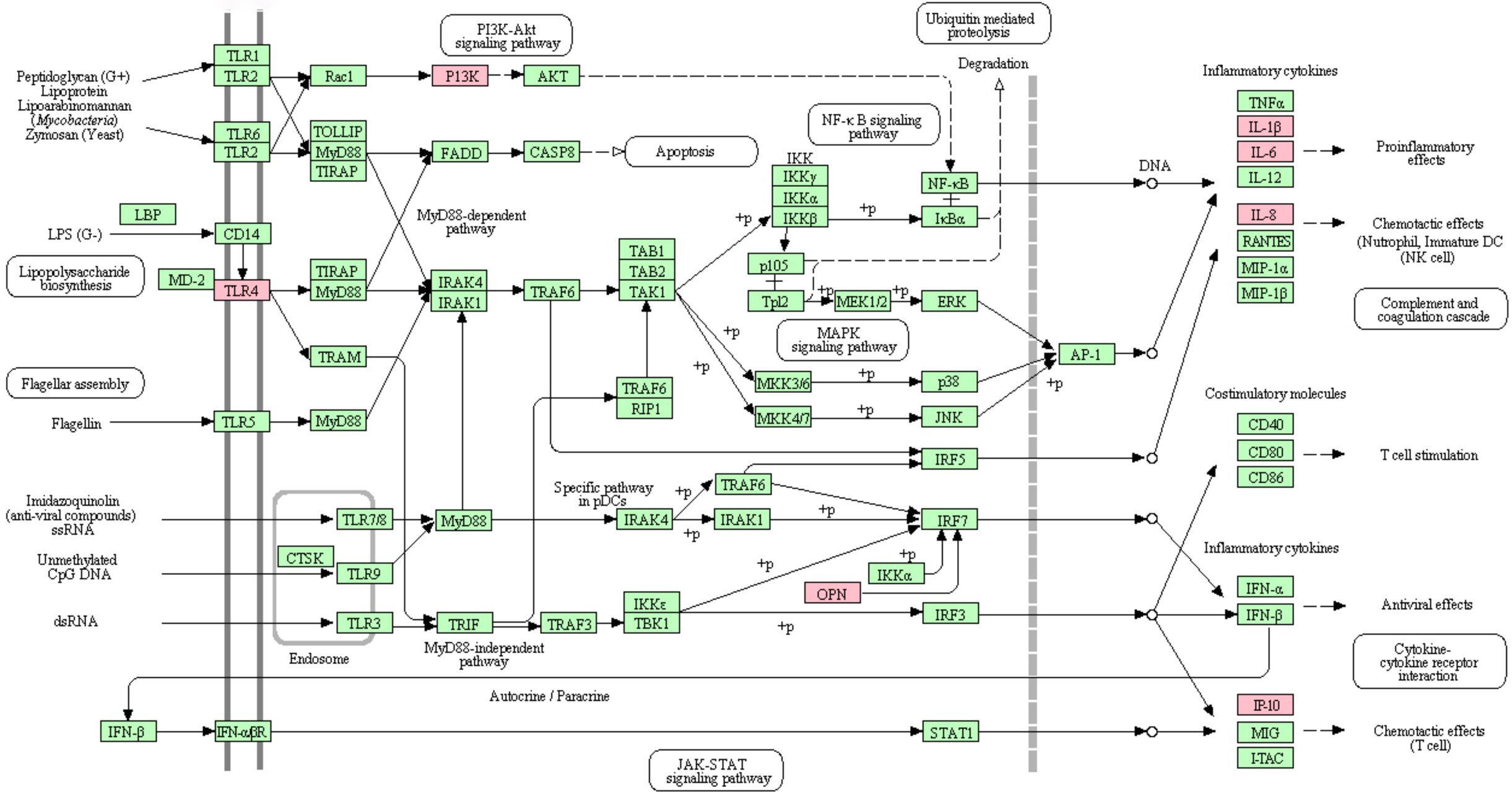

JAK-STAT Signaling Pathway

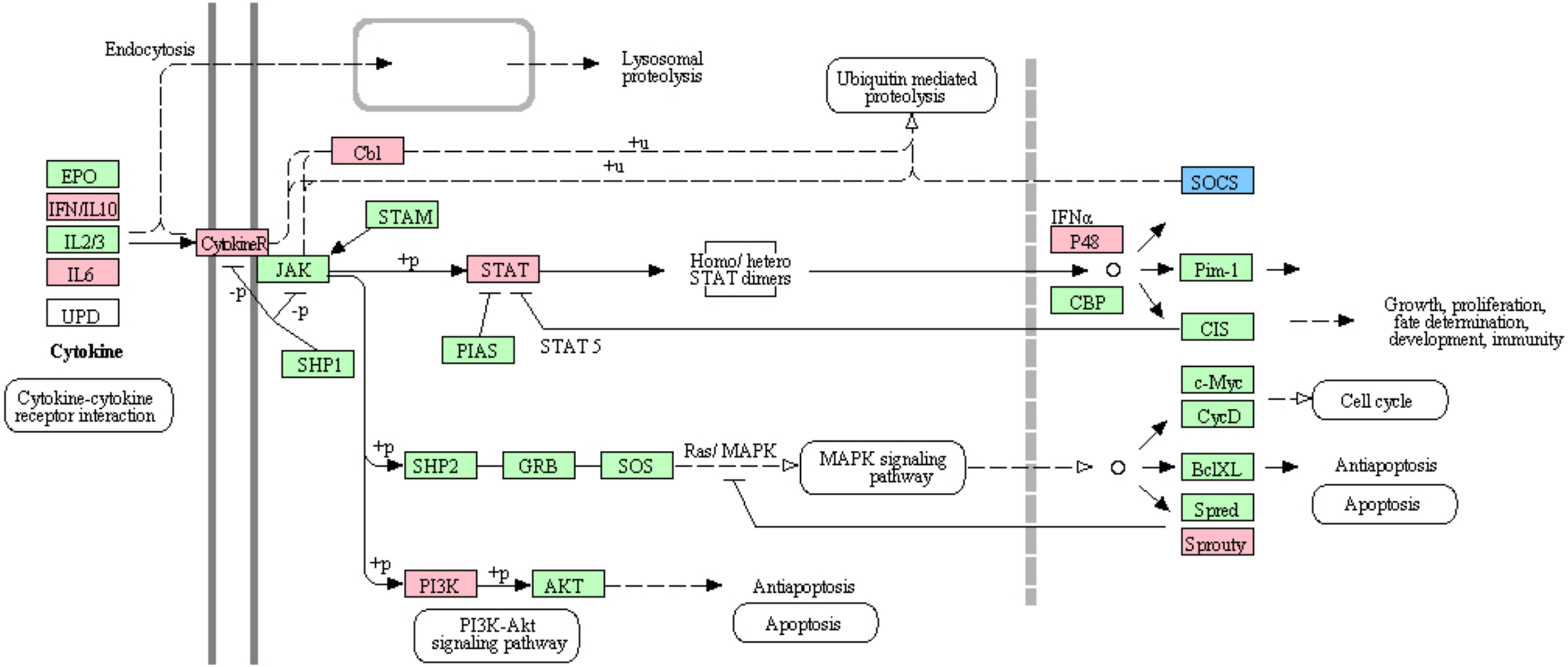

Insulin Signaling Pathway

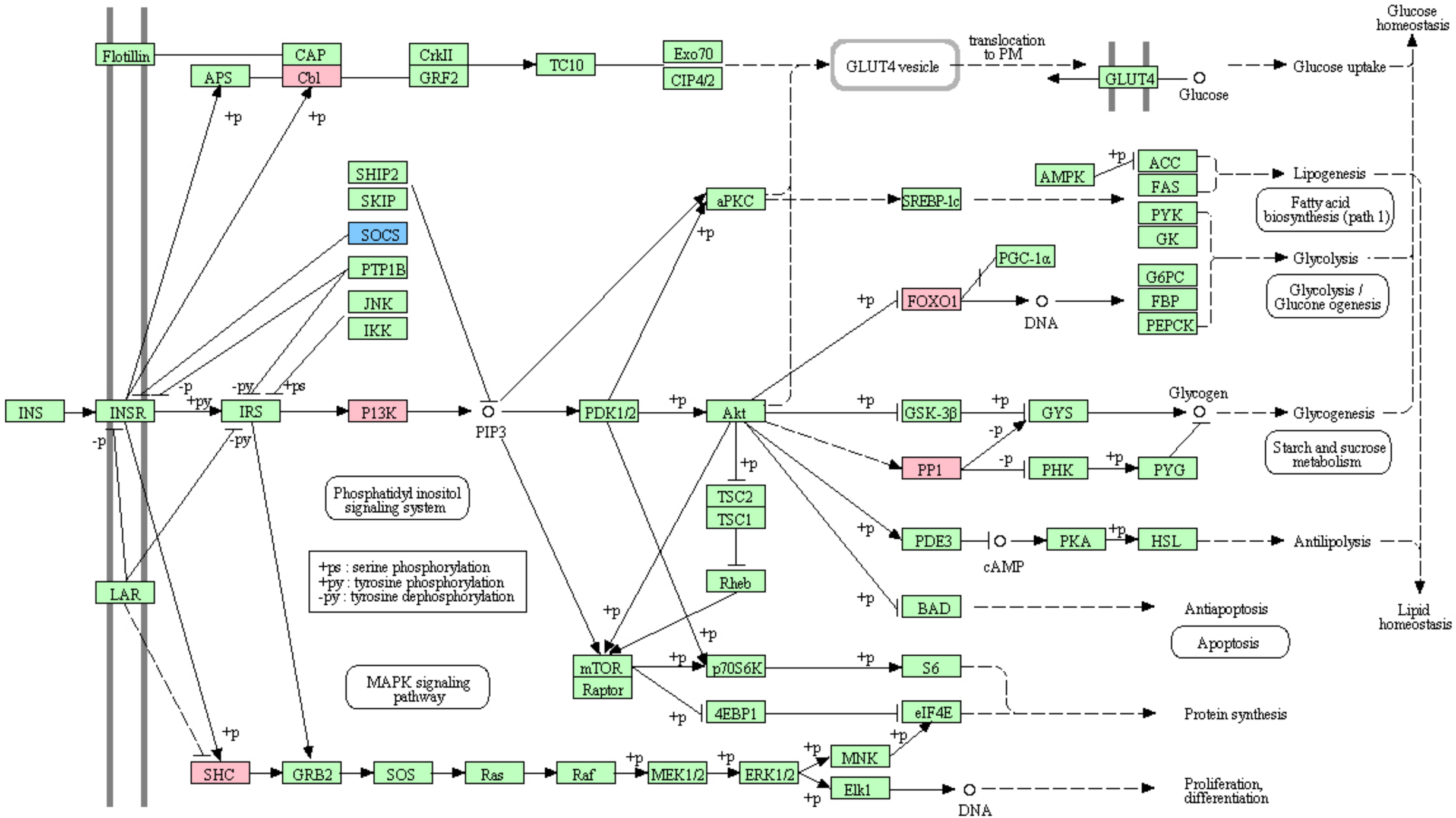

MAP Signaling Pathway

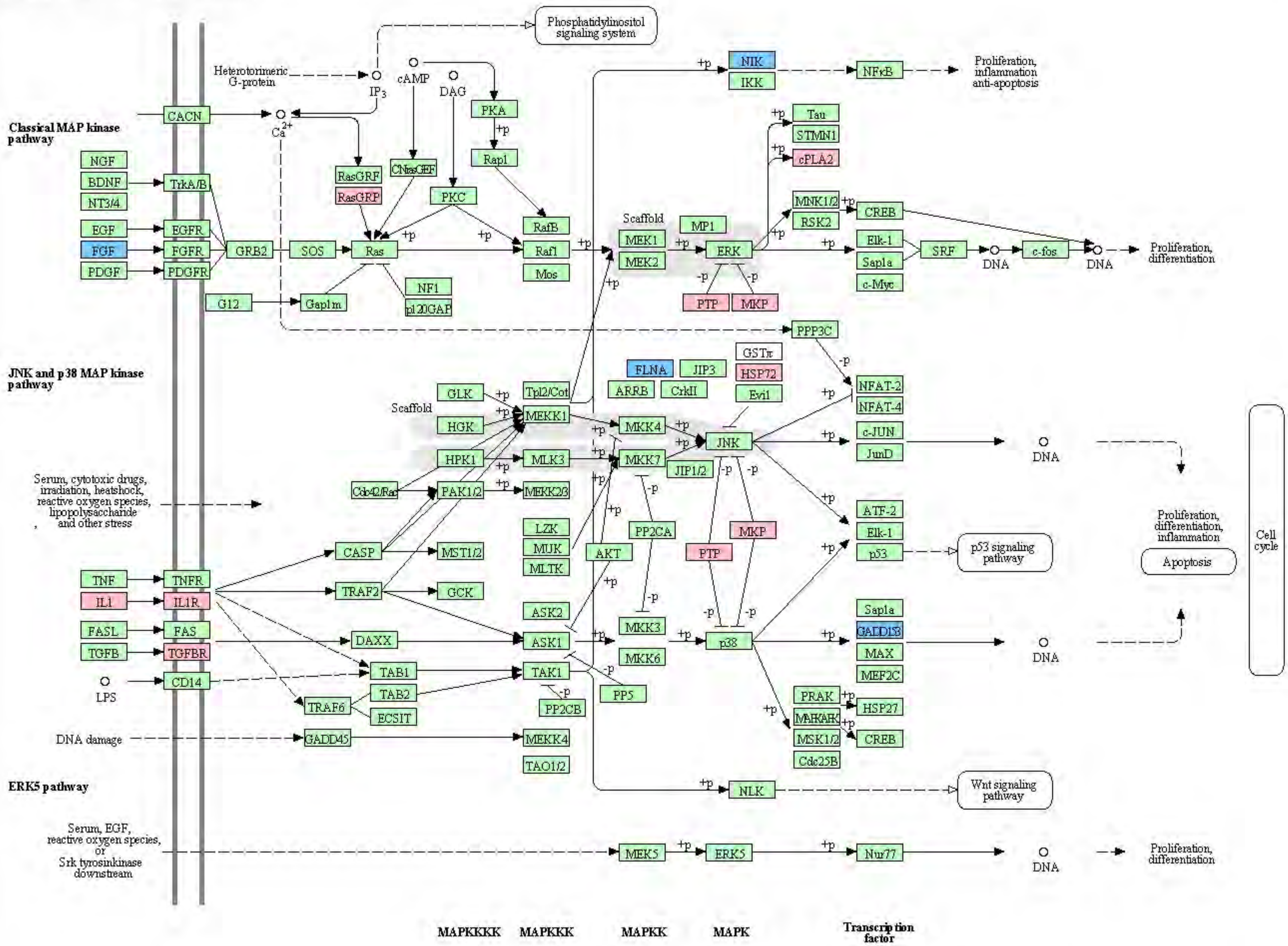

Chemokine Signaling Pathway

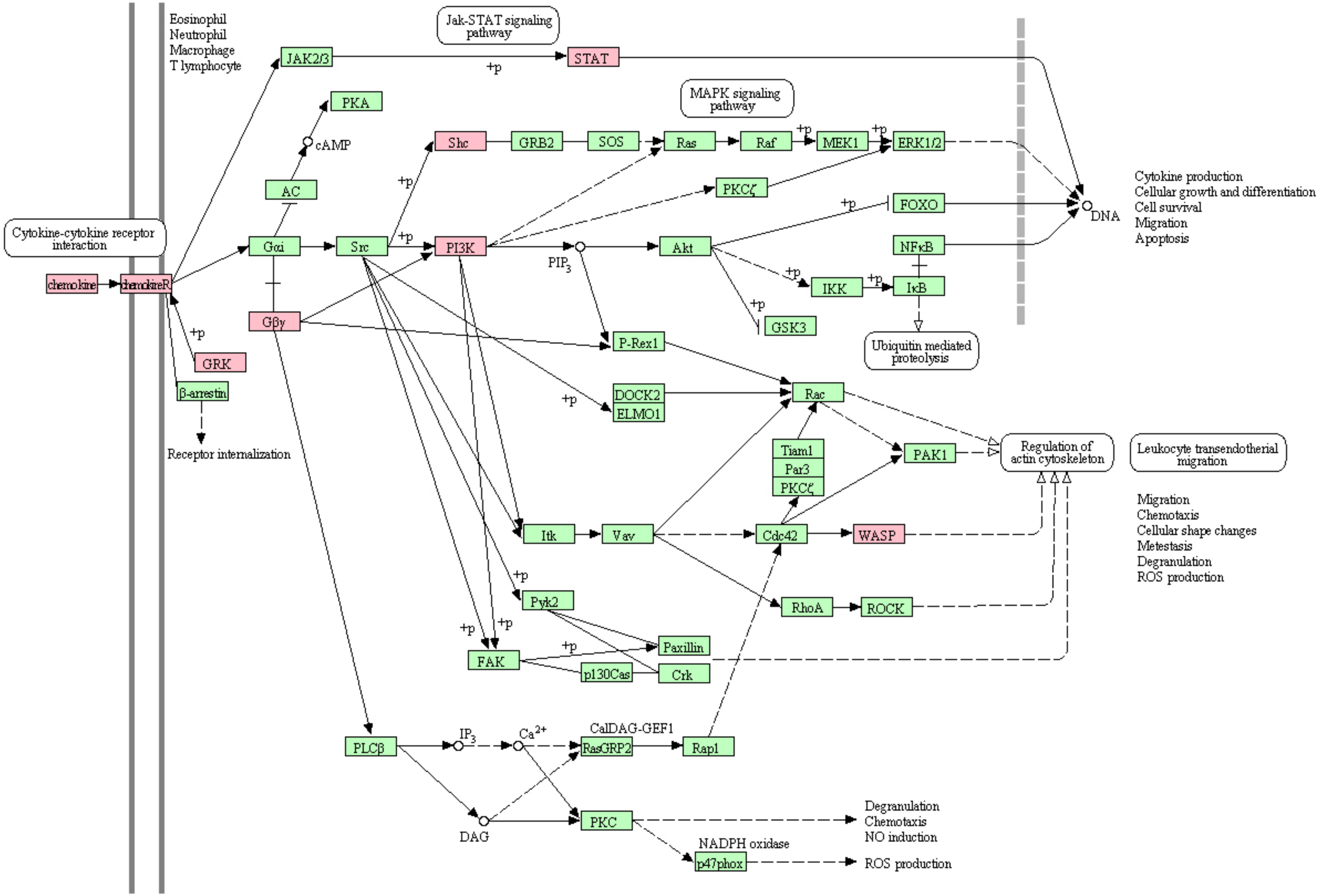

Pathways in Cancer

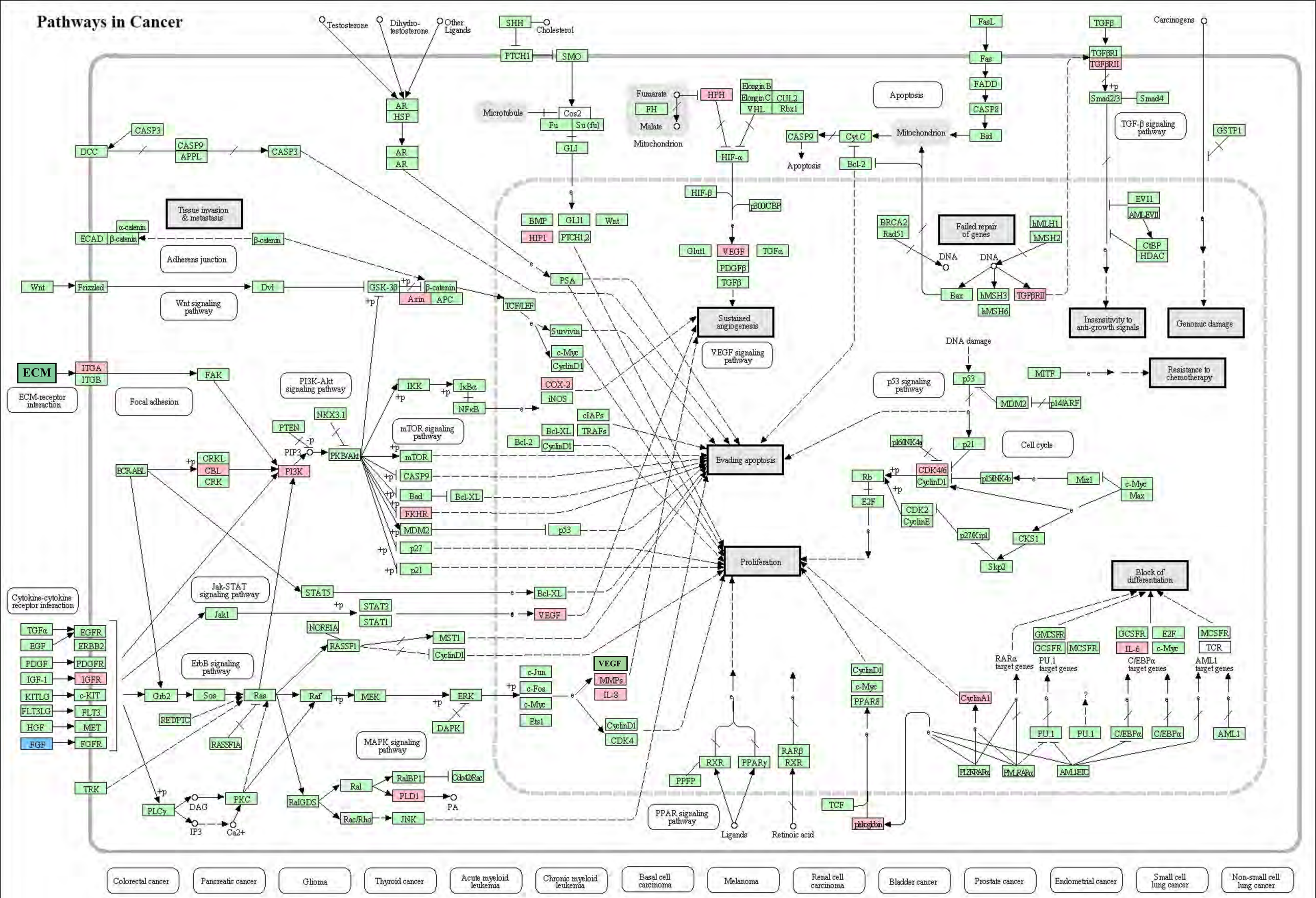

Pancreatic Cancer

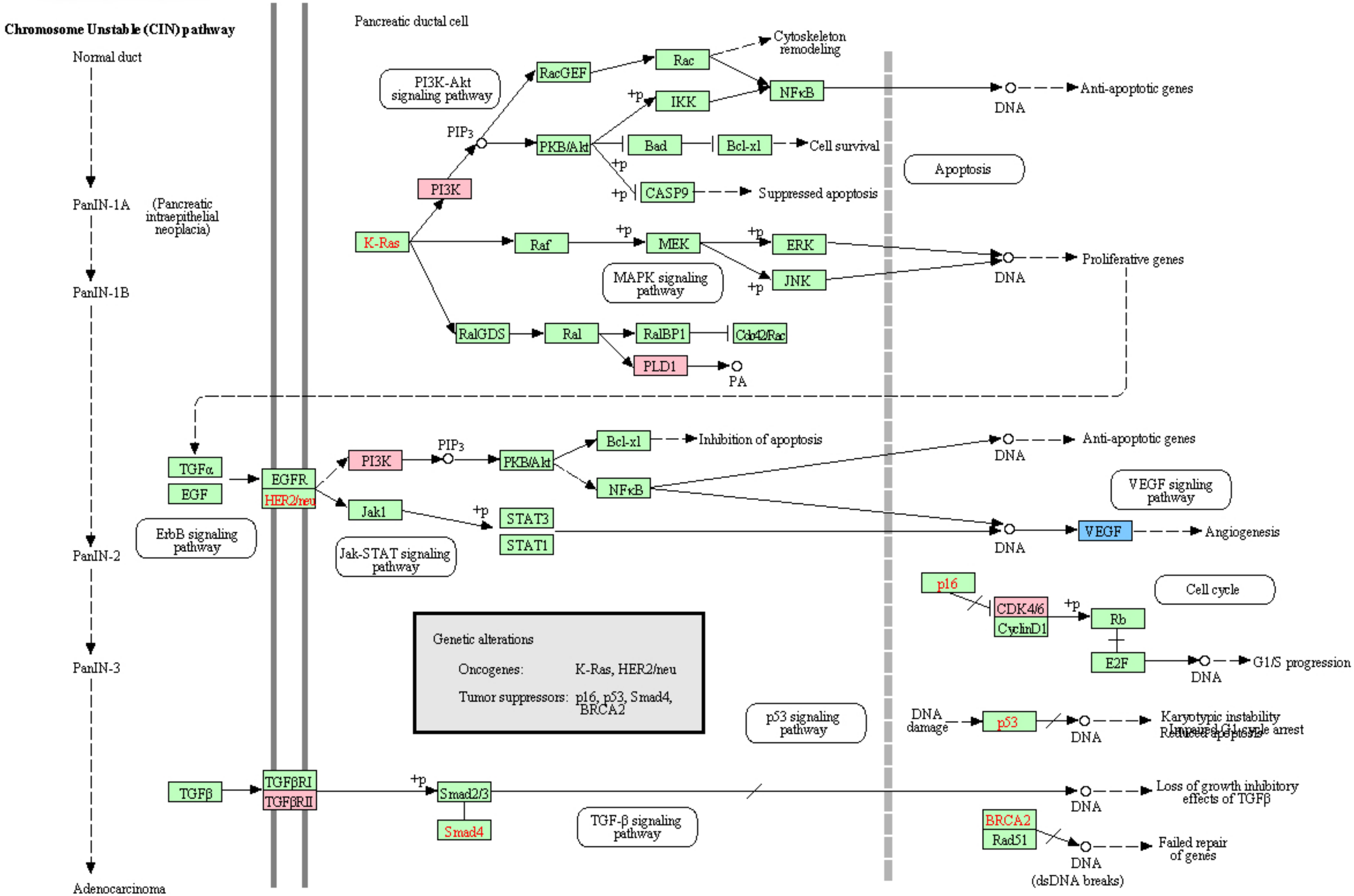

Glioma

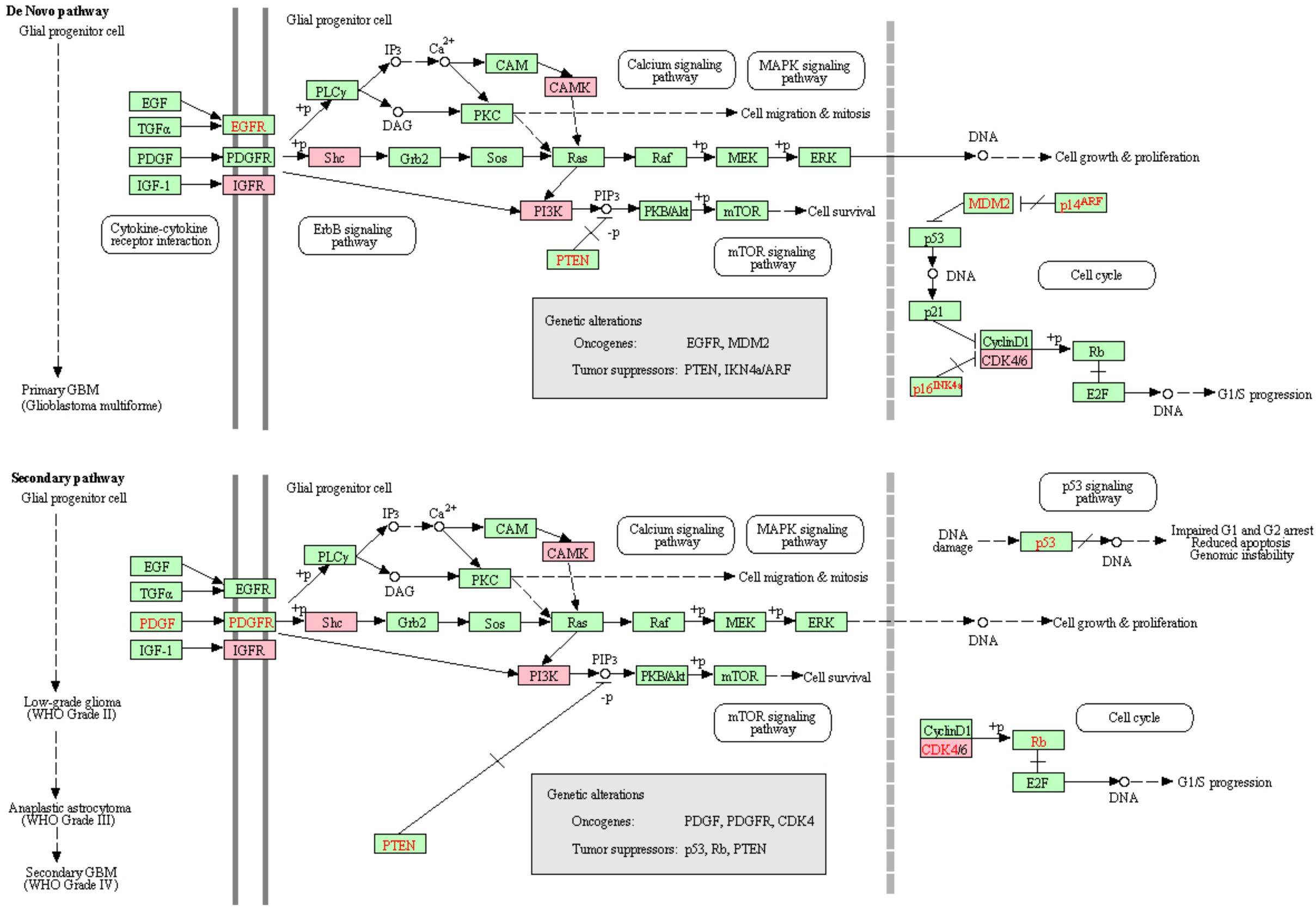
De Novo pathway
Glial progenitor cell
Primary GBM
(Glioblastoma multiforme)
Glial progenitor cell
EGF
TGFα
PDGF
IGF-1
EGFR
PDGFR
IGFR
Cytokine-cytokine receptor interaction
ErbB signaling pathway
PLCγ
+p
IP3
Ca2+
DAG
CAM
CAMK
PKC
Calcium signaling pathway
MAPK signaling pathway
Cell migration & mitosis
Shc
Grb2
Sos
Ras
Raf
MEK
ERK
DNA
Cell growth & proliferation
PI3K
PIP3
PKB/Akt
mTOR
Cell survival
-p
PTEN
mTOR signaling pathway
MDM2
p14ARF
p53
DNA
Cell cycle
p21
CyclinD1
CDK4/6
Rb
p16INK4a
E2F
G1/S progression
Genetic alterations
Oncogenes: EGFR, MDM2
Tumor suppressors: PTEN, IKN4a/ARF
Secondary pathway
Glial progenitor cell
Low-grade glioma
(WHO Grade II)
Anaplastic astrocytoma
(WHO Grade III)
Secondary GBM
(WHO Grade IV)
Glial progenitor cell
p53 signaling pathway
DNA damage
p53
Impaired G1 and G2 arrest
Reduced apoptosis
Genomic instability
Genetic alterations
Oncogenes: PDGF, PDGFR, CDK4
Tumor suppressors: p53, Rb, PTEN

Bladder Cancer

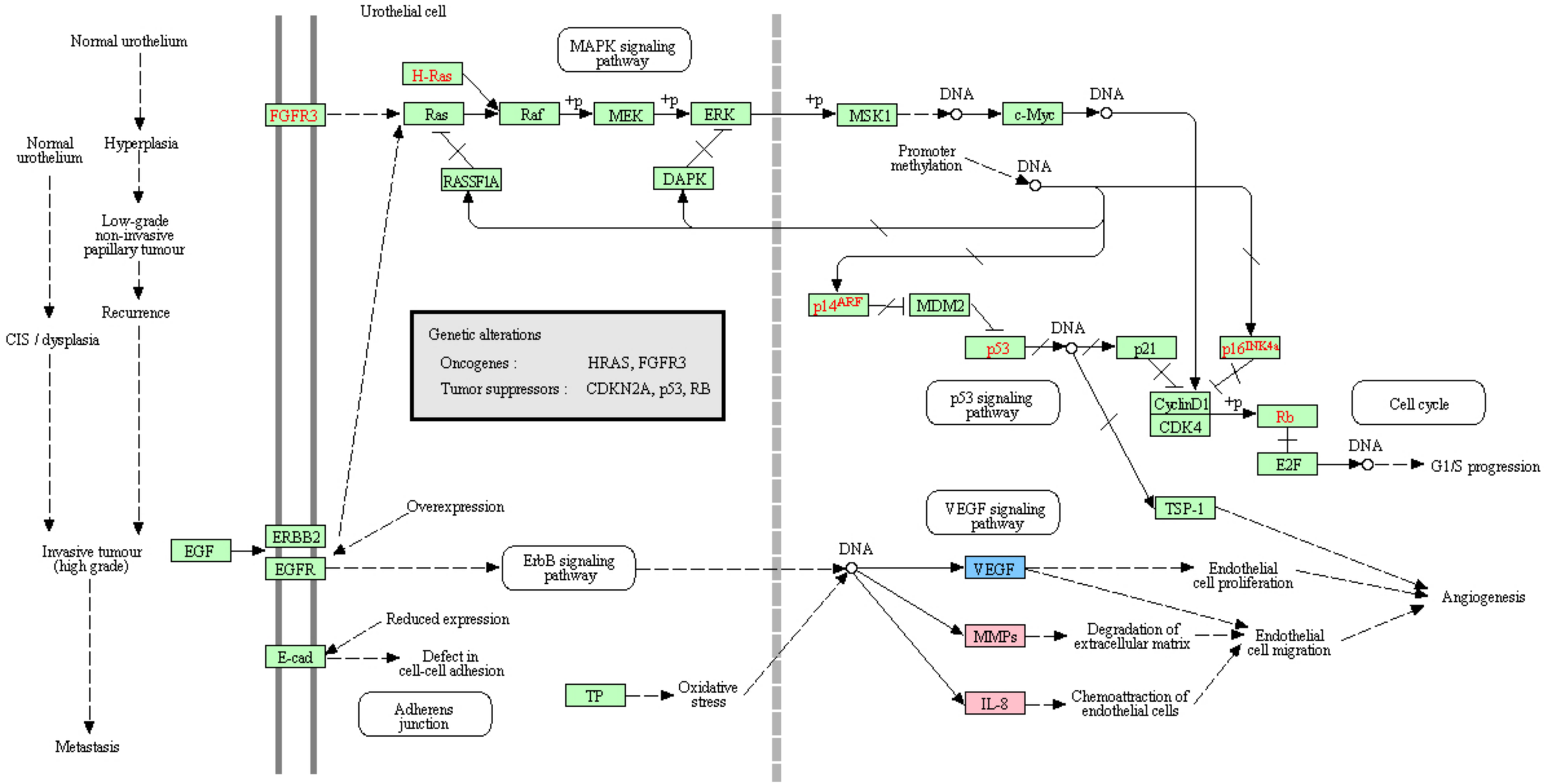

Small Cell Lung Cancer

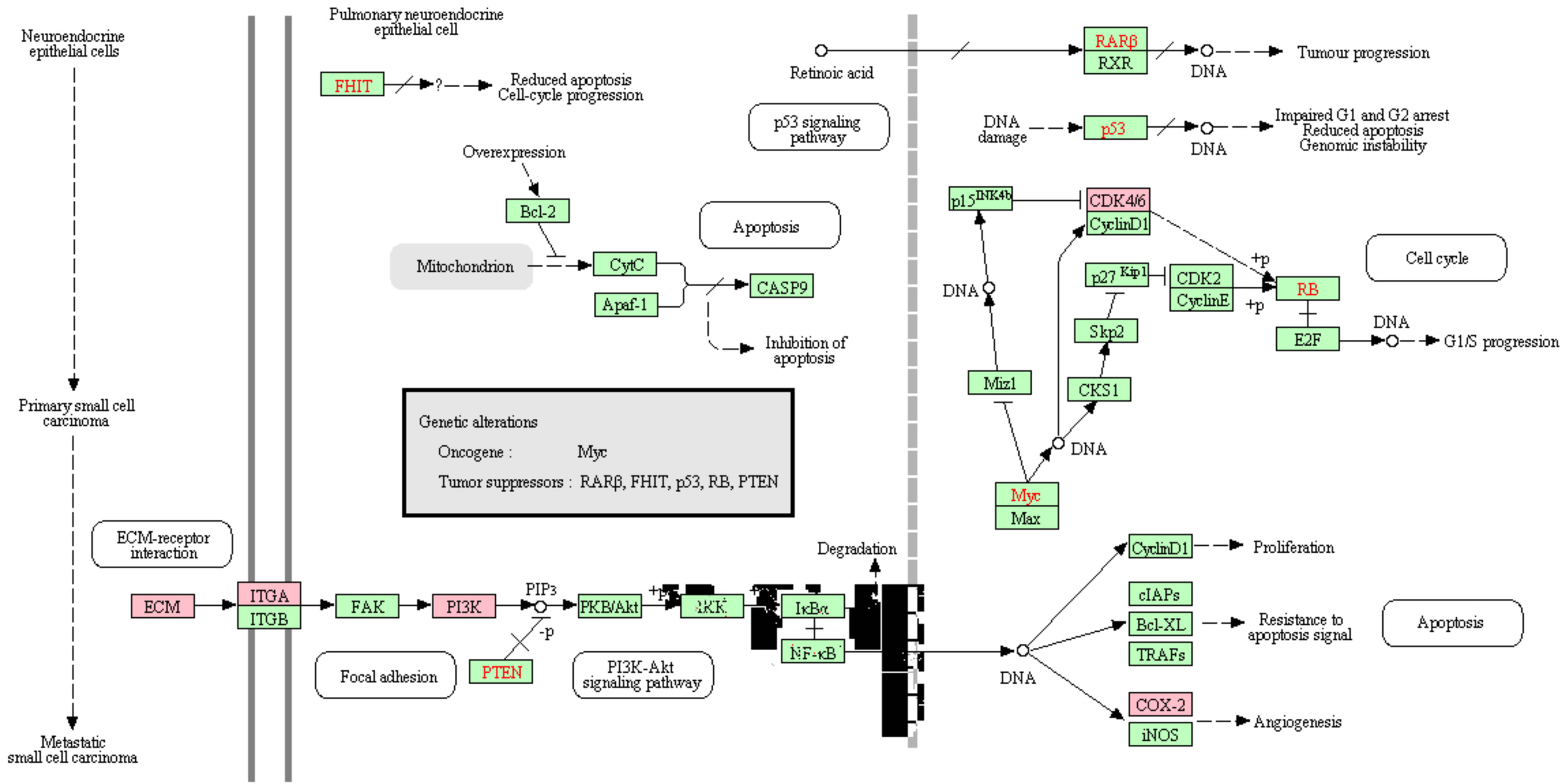

Chronic Myeloid Leukemia

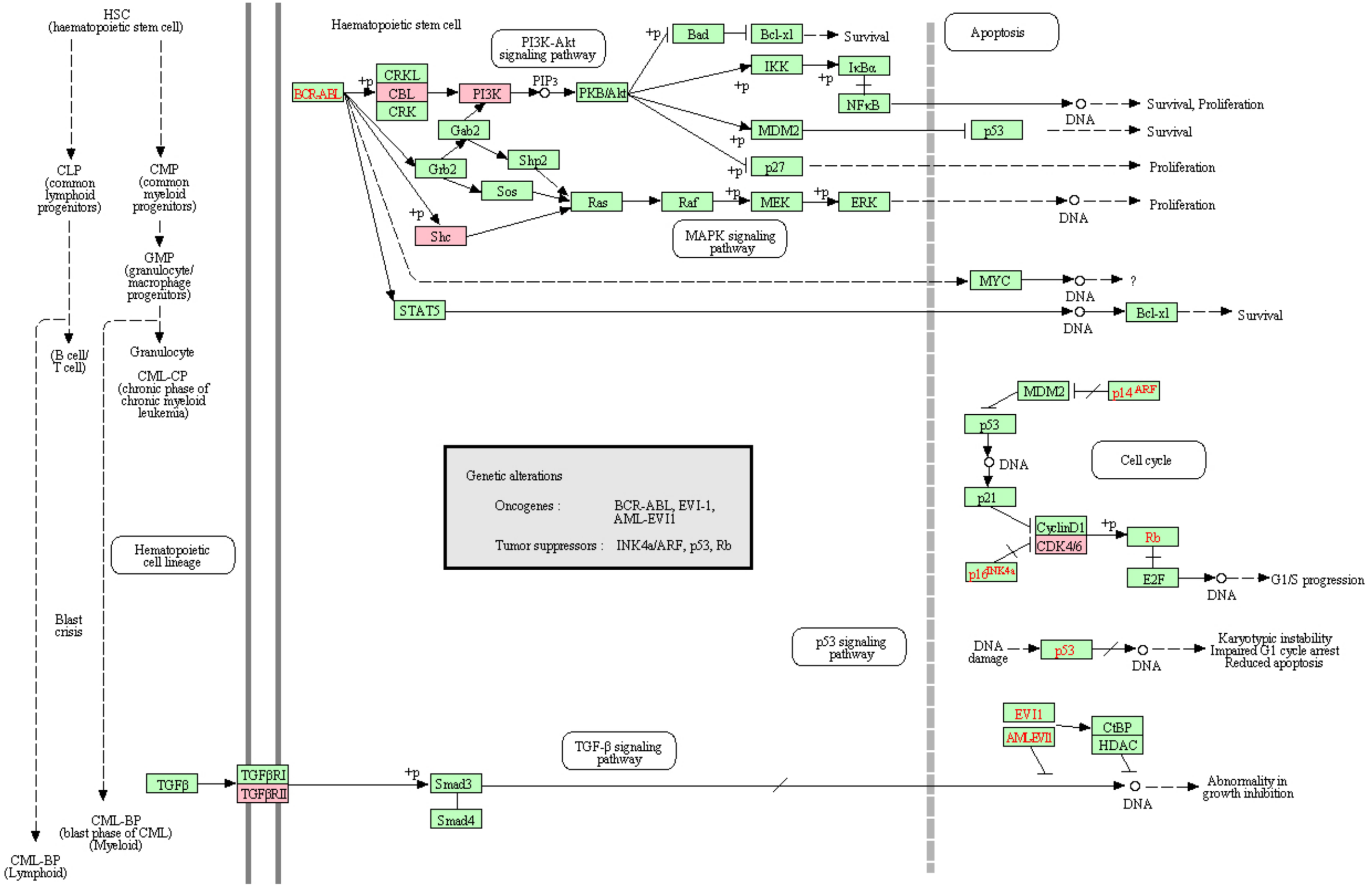

Endocytosis

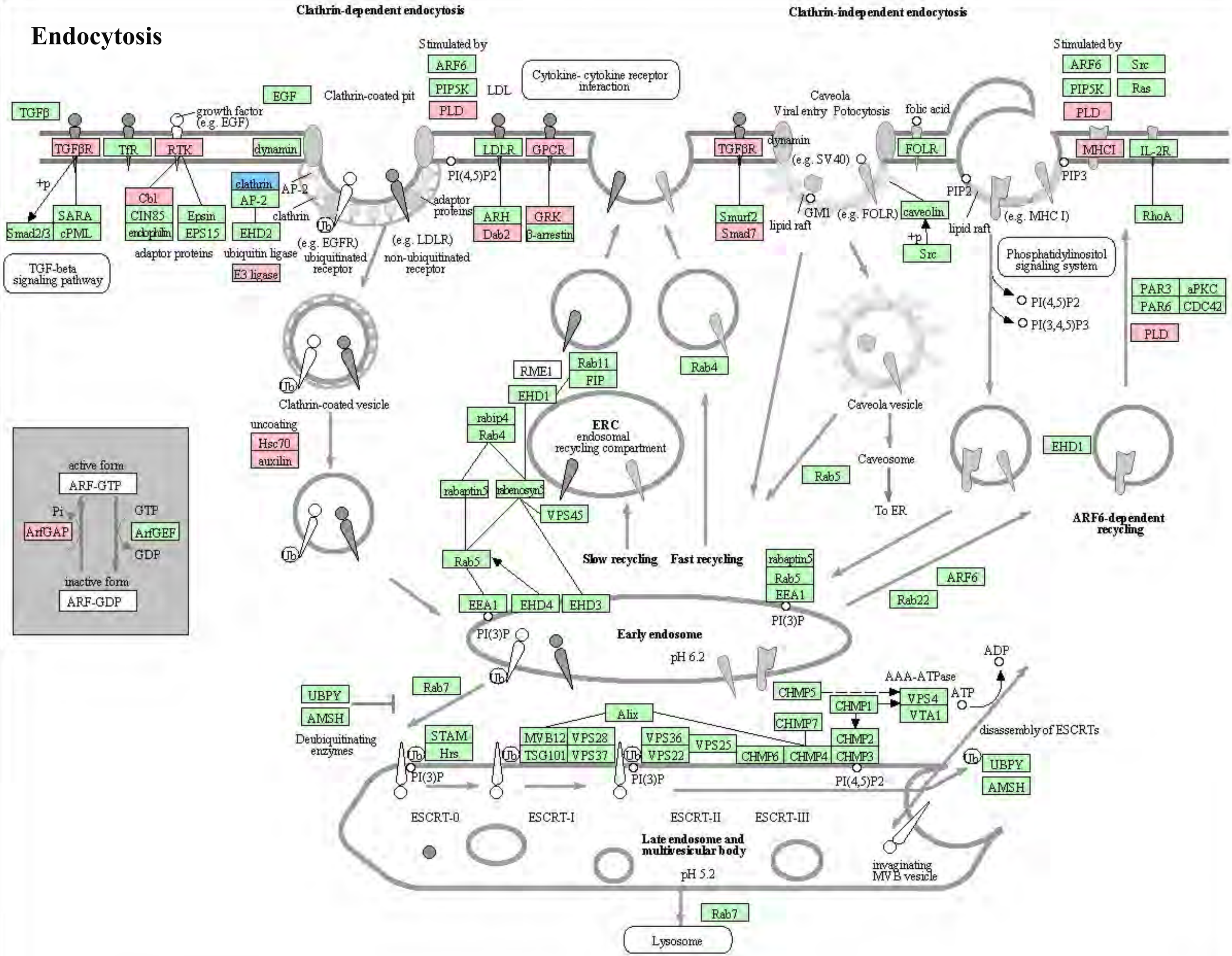

Osteoclast Differentiation

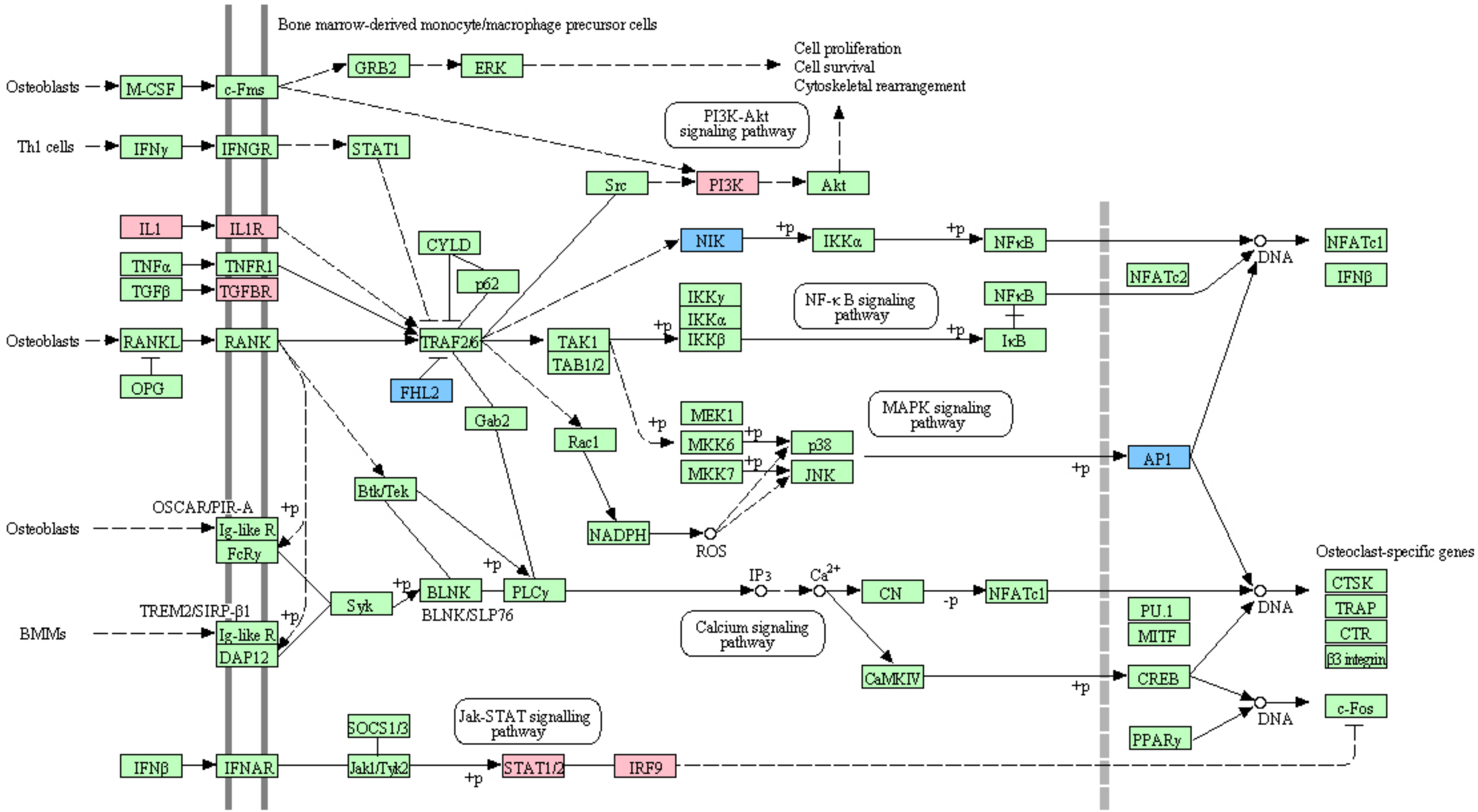

Focal Adhesion

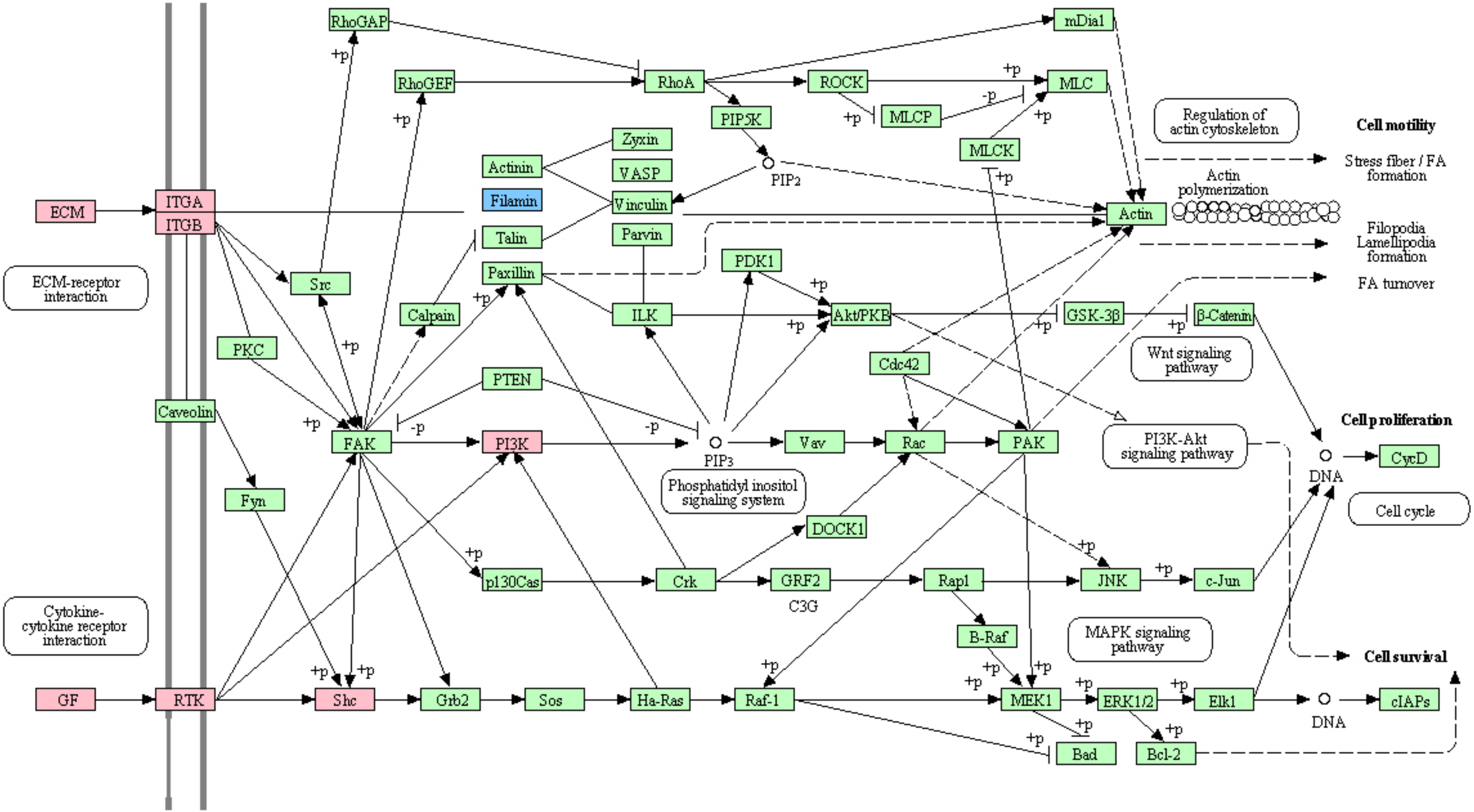

ECM-Receptor Interaction

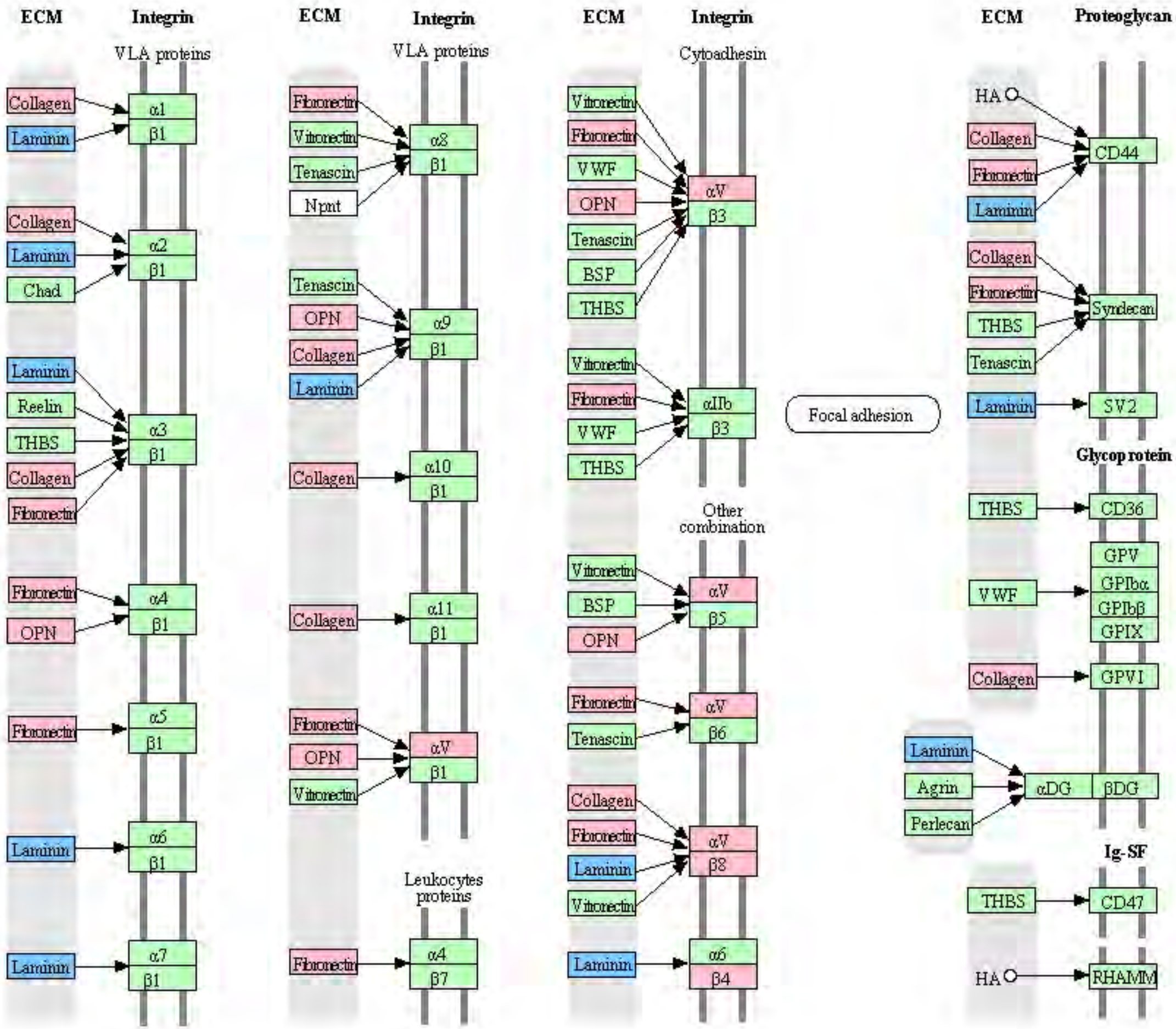

Cell Adhesion Molecules

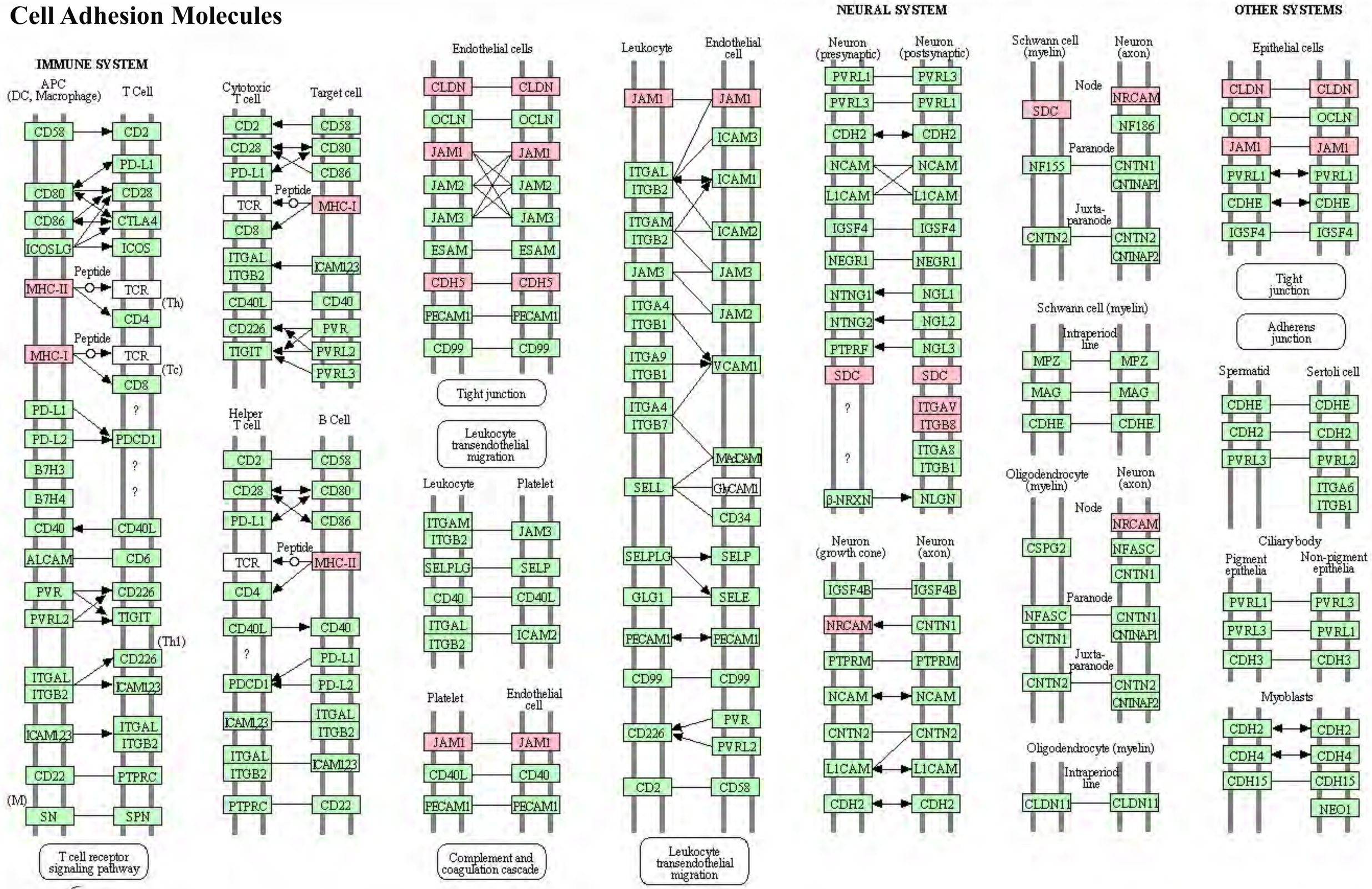

Complement and Coagulation Cascades

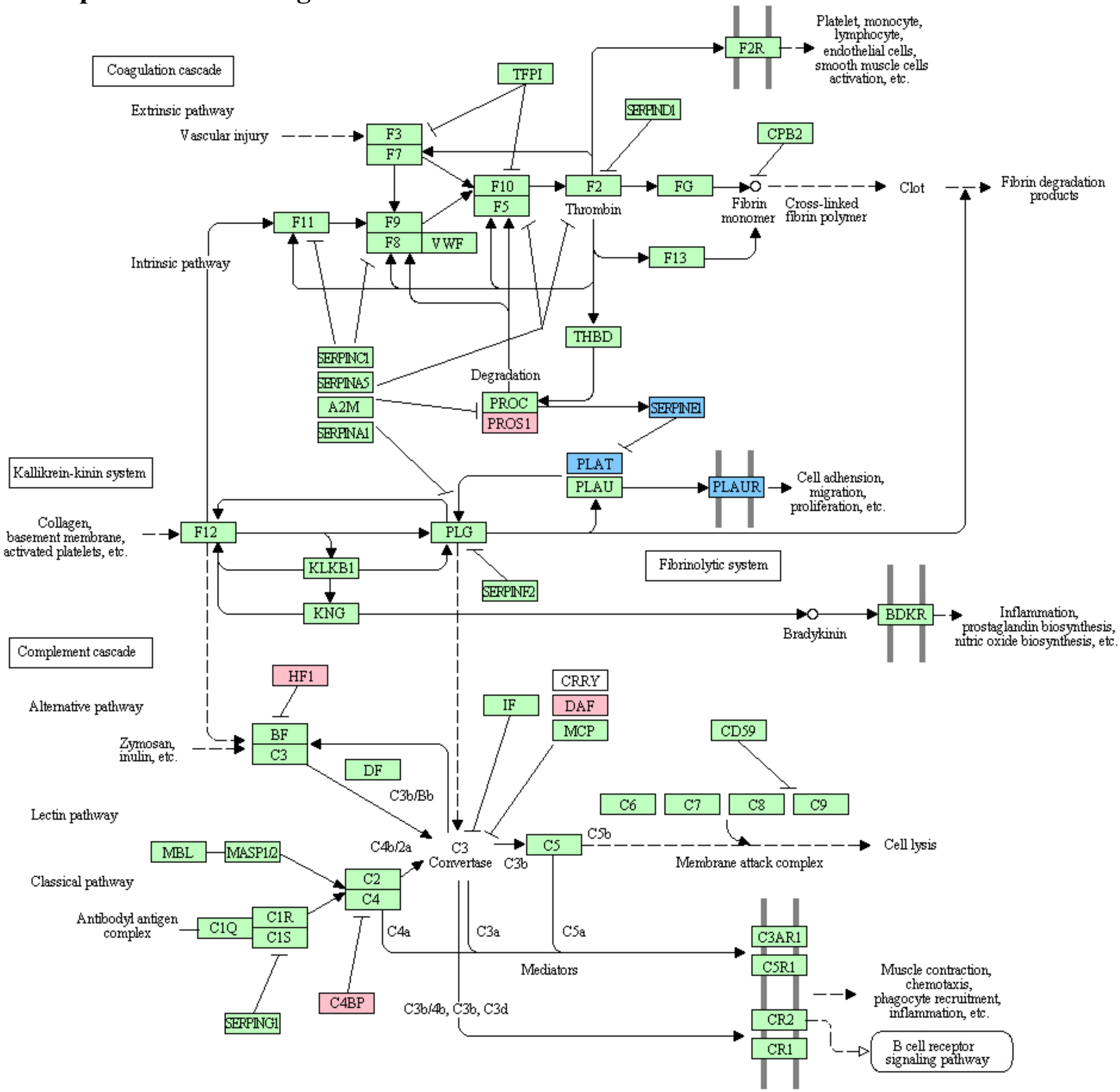

NOD-Like Receptor Signaling Pathway

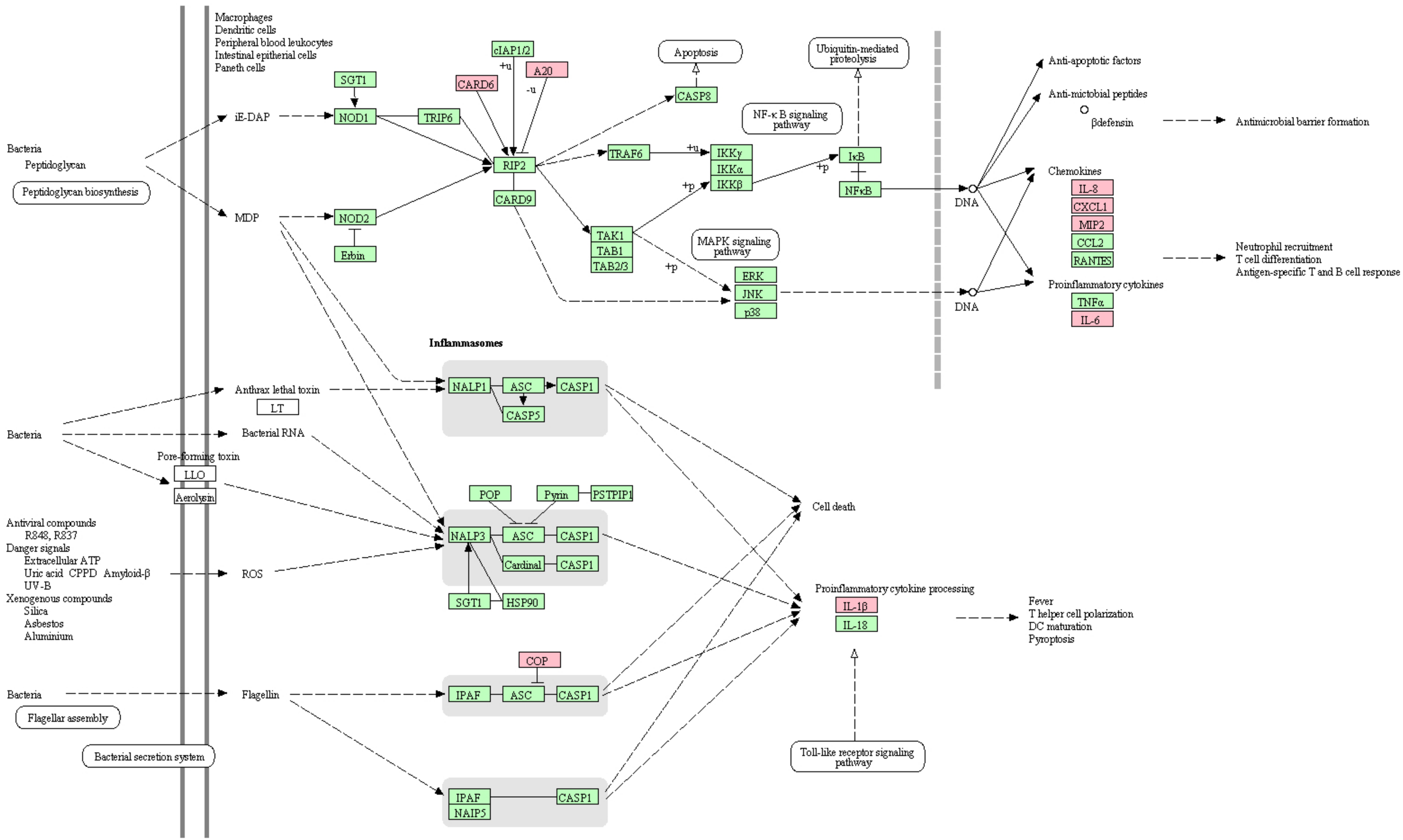

Hematopoietic Cell Lineage

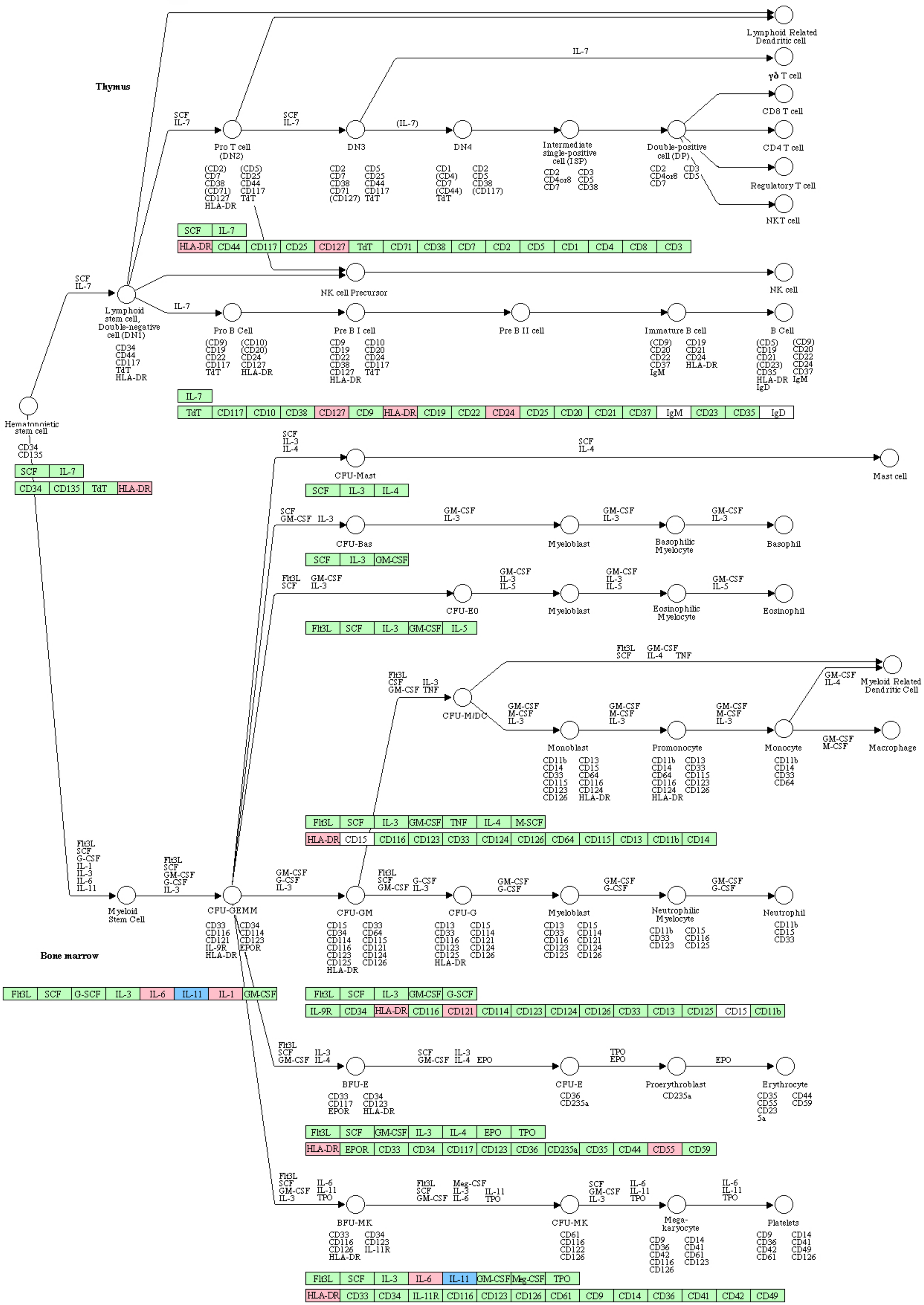

FcγR-Mediated Phagocytosis

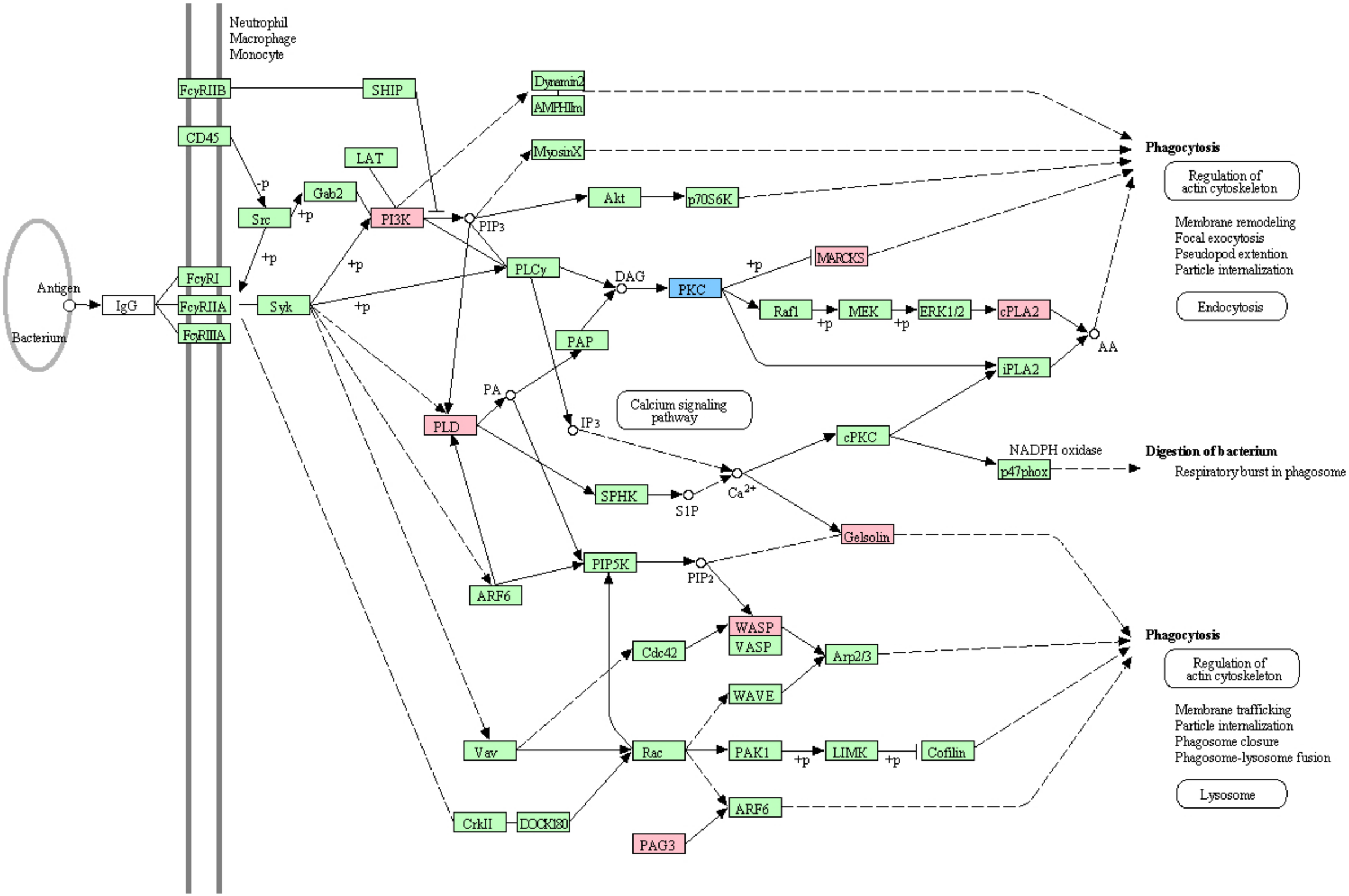

Type I Diabetes Mellitus

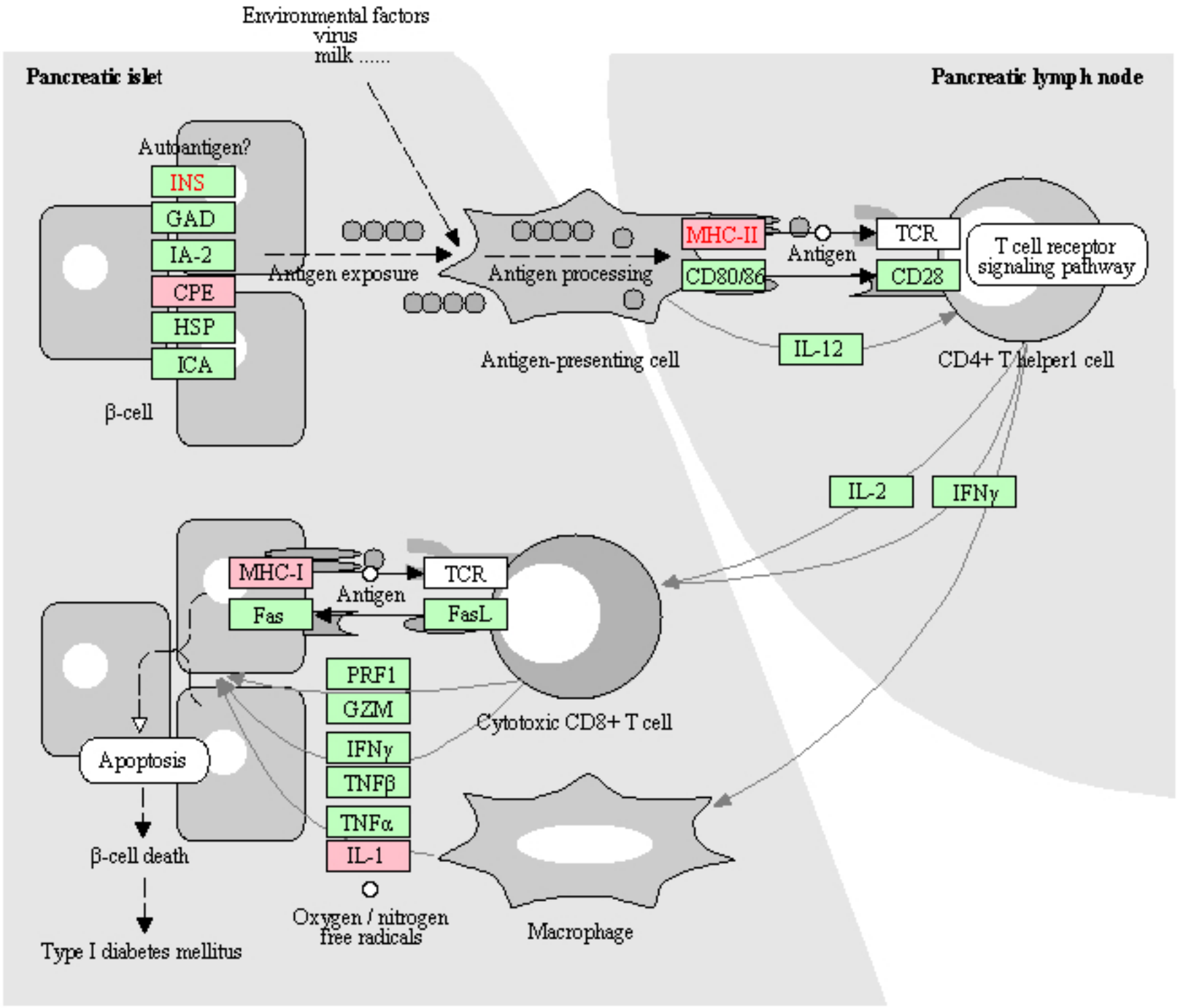

Bacterial Invasion of Epithelial Cells

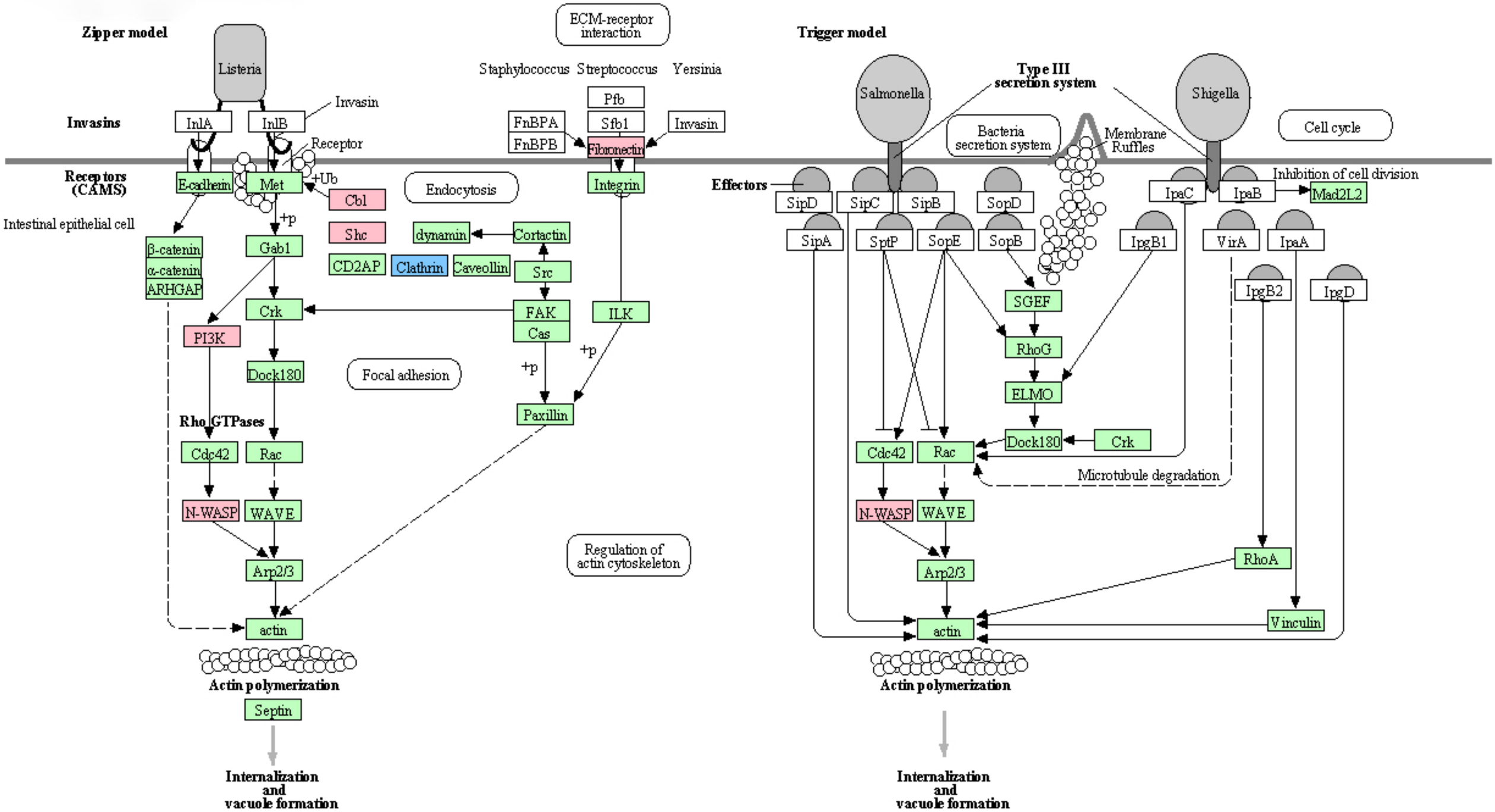

Malaria

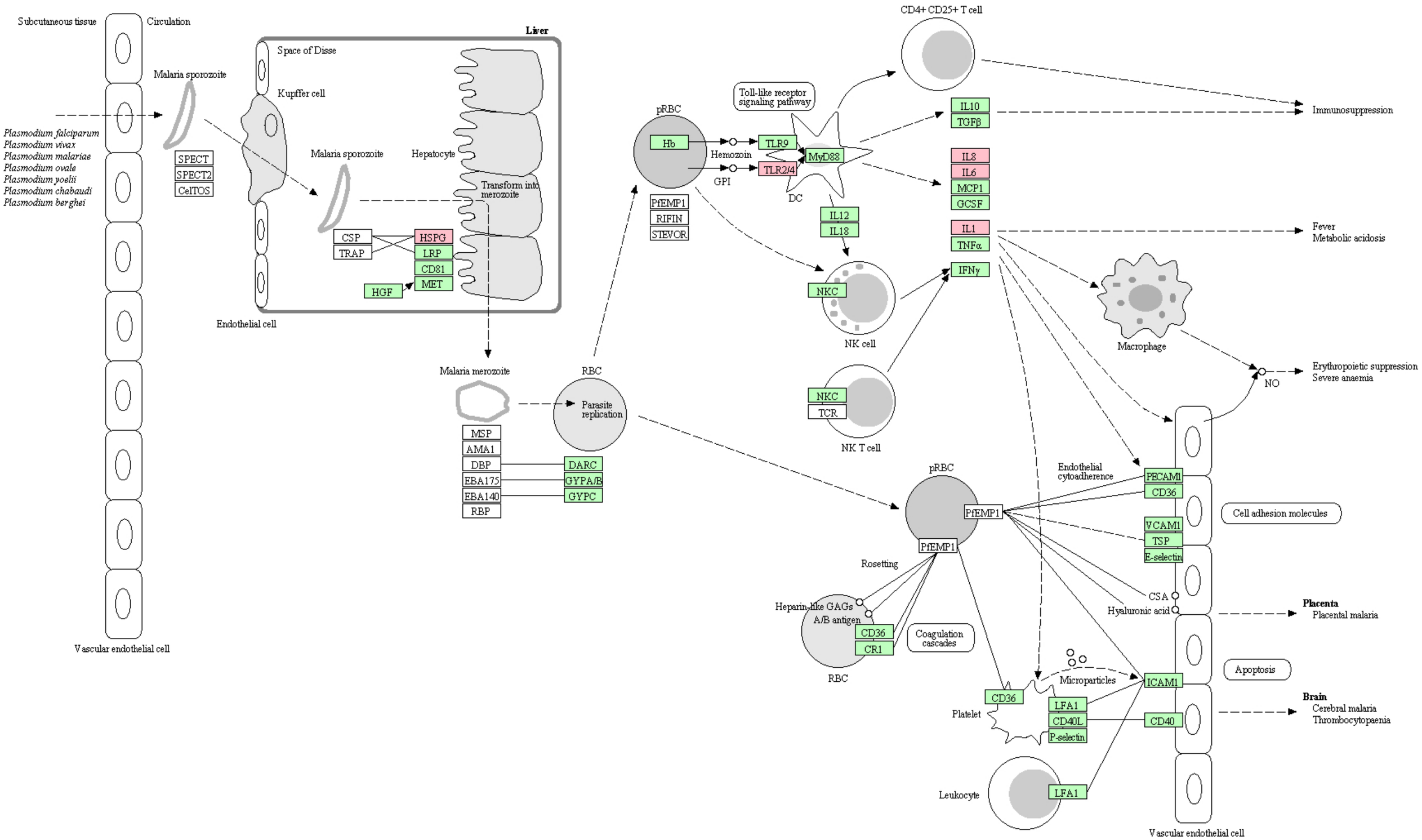
Subcutaneous tissue
Circulation
Liver
Space of Disse
Malaria sporozoite
Kupffer cell
Plasmodium falciparum
Plasmodium vivax
Plasmodium malariae
Plasmodium ovale
Plasmodium poelii
Plasmodium chabaudi
Plasmodium berghei
SPECT
SPECT2
CelTOS
Malaria sporozoite
Hepatocyte
Transform into merozoite
CSP
TRAP
HSPG
LRP
CD81
MET
HGF
Endothelial cell
Malaria merozoite
RBC
Parasite replication
MSP
AMA1
DBP
EBA175
EBA140
RBP
DARC
GYPA/B
GYPC
Vascular endothelial cell
CD4+ CD25+ T cell
Toll-like receptor signaling pathway
pRBC
Hb
Hemozoin
GPI
TLR9
TLR2/4
MyD88
DC
PfEMP1
RIFIN
STEVOR
IL12
IL18
NKC
NK cell
NKC
TCR
NK T cell
IL10
TGFβ
Immunosuppression
IL8
IL6
MCP1
GCSF
IL1
TNFα
IFNγ
Fever
Metabolic acidosis
Macrophage
NO
Erythropoietic suppression
Severe anaemia
pRBC
PfEMP1
PfEMP1
Endothelial cytoadherence
PECAM1
CD36
VCAM1
TSP
E-selectin
Cell adhesion molecules
Rosetting
Heparin-like GAGs
A/B antigen
CD36
CR1
Coagulation cascades
RBC
CSA
Hyaluronic acid
Placenta
Placental malaria
Microparticles
ICAM1
Apoptosis
CD36
Platelet
LFA1
CD40L
P-selectin
CD40
Brain
Cerebral malaria
Thrombocytopaenia
Leukocyte
LFA1
Vascular endothelial cell

Amoebiasis

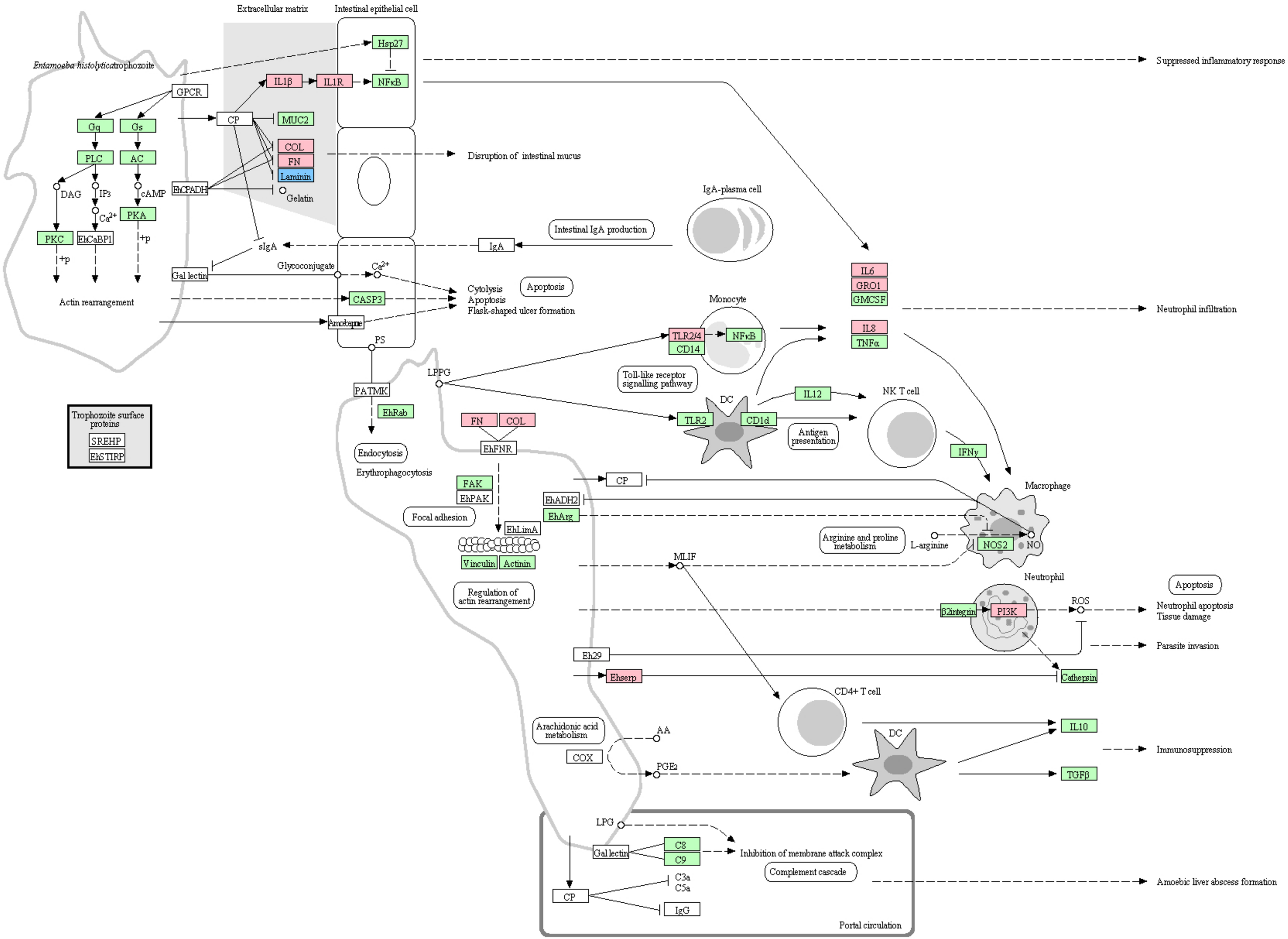
Extracellular matrix
Intestinal epithelial cell
Entamoeba histolyticatrophozoite
Hsp27
Suppressed inflammatory response
GPCR
IL1β
IL1R
NFκB
Gq
Gs
CP
MUC2
PLC
AC
COL
FN
Laminin
Disruption of intestinal mucus
DAG
IP3
cAMP
EhCPADH
Gelatin
Ca2+
PKA
IgA-plasma cell
PKC
EhCaBP1
+p
Intestinal IgA production
sIgA
IgA
Glycoconjugate
Ca2+
Gal lectin
IL6
GRO1
GMCSF
Cytolysis
Apoptosis
Apoptosis
Flask-shaped ulcer formation
Actin rearrangement
CASP3
Monocyte
Neutrophil infiltration
Amoebapore
TLR2/4
NFκB
IL8
CD14
TNFα
PS
LPPG
Toll-like receptor signalling pathway
PATMK
IL12
NK T cell
DC
EhRab
TLR2
CD1d
Trophozoite surface proteins
SREHP
EhSTIRP
FN
COL
Antigen presentation
EhFNR
IFNγ
Endocytosis
Erythrophagocytosis
CP
Macrophage
FAK
EhPAK
EhADH2
Focal adhesion
EhArg
EhLimA
Arginine and proline metabolism
L-arginine
NOS2
NO
Vinculin
Actinin
MLIF
Neutrophil
Regulation of actin rearrangement
Apoptosis
ROS
β2integrin
PI3K
Neutrophil apoptosis
Tissue damage
Parasite invasion
Eh29
Ehserp
Cathepsin
CD4+ T cell
Arachidonic acid metabolism
AA
IL10
DC
COX
Immunosuppression
PGE2
TGFβ
LPG
Gal lectin
C8
C9
Inhibition of membrane attack complex
Complement cascade
Amoebic liver abscess formation
C3a
C5a
CP
IgG
Portal circulation

Measles

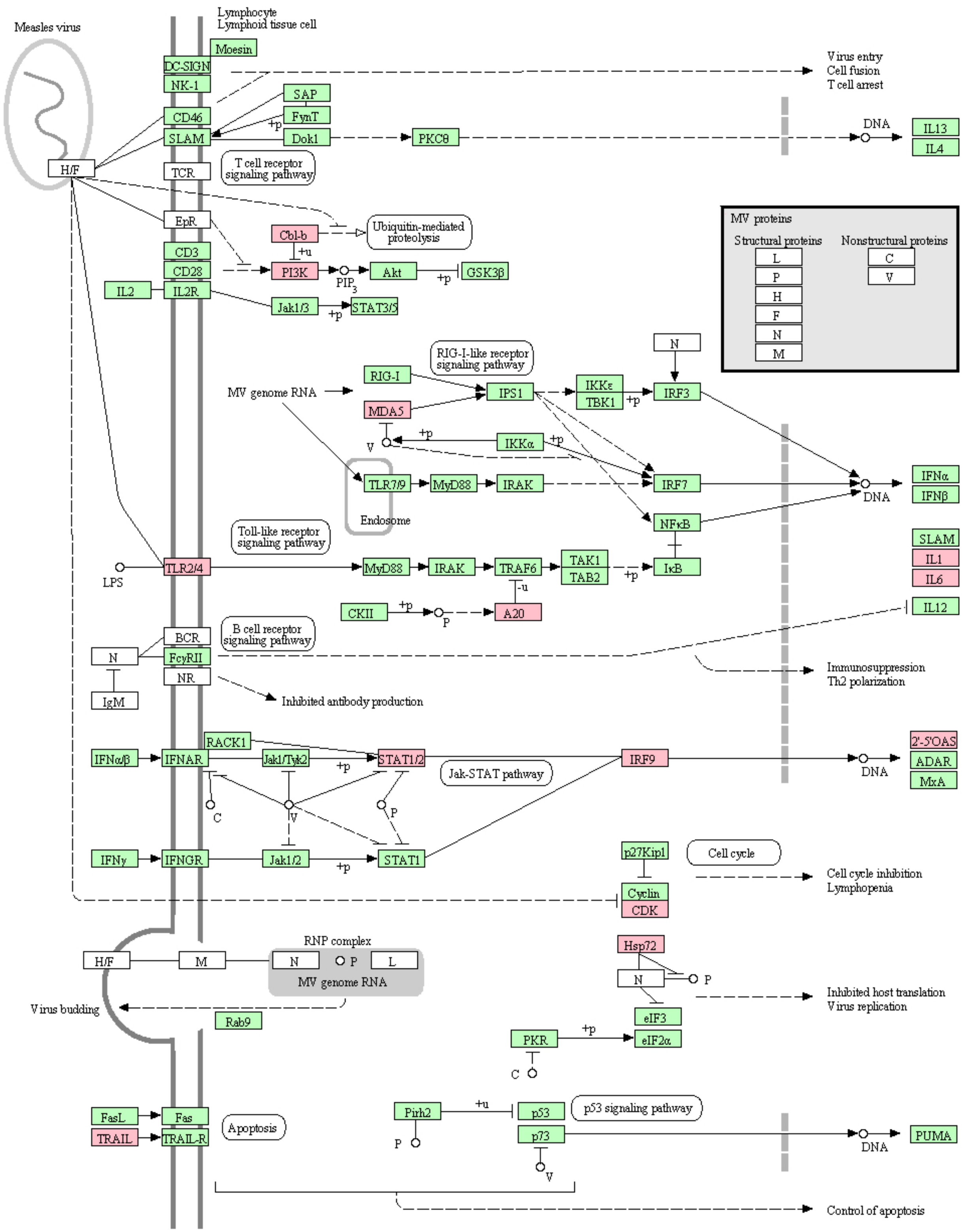
Measles virus
Lymphocyte
Lymphoid tissue cell
Moesin
DC-SIGN
NK-1
CD46
SLAM
SAP
FynT
Dok1
+p
PKCθ
Virus entry
Cell fusion
T cell arrest
DNA
IL13
IL4
H/F
TCR
T cell receptor signaling pathway
EpR
Cbl-b
+u
Ubiquitin-mediated proteolysis
CD3
CD28
PI3K
PIP3
Akt
+p
GSK3β
IL2
IL2R
Jak1/3
+p
STAT3/5
MV proteins
Structural proteins
Nonstructural proteins
L
P
H
F
N
M
C
V
N
RIG-I-like receptor signaling pathway
RIG-I
MV genome RNA
IPS1
IKKε
TBK1
+p
IRF3
MDA5
V
+p
IKKα
+p
TLR7/9
MyD88
IRAK
IRF7
IFNα
IFNβ
DNA
Endosome
NFκB
Toll-like receptor signaling pathway
SLAM
IL1
IL6
LPS
TLR2/4
MyD88
IRAK
TRAF6
TAK1
TAB2
+p
IκB
-u
IL12
CKII
+p
P
A20
B cell receptor signaling pathway
BCR
N
FcγRII
NR
IgM
Immunosuppression
Th2 polarization
Inhibited antibody production
RACK1
IFNα/β
IFNAR
Jak1/Tyk2
+p
STAT1/2
Jak-STAT pathway
IRF9
2'-5'OAS
ADAR
MxA
DNA
C
V
P
IFNγ
IFNGR
Jak1/2
+p
STAT1
p27Kip1
Cell cycle
Cyclin
CDK
Cell cycle inhibition
Lymphopenia
RNP complex
H/F
M
N
P
L
MV genome RNA
Hsp72
N
P
Virus budding
Rab9
eIF3
PKR
+p
eIF2α
C
Inhibited host translation
Virus replication
FasL
Fas
TRAIL
TRAIL-R
Apoptosis
Pirh2
+u
p53
p53 signaling pathway
p73
P
V
DNA
PUMA
Control of apoptosis

Influenza A

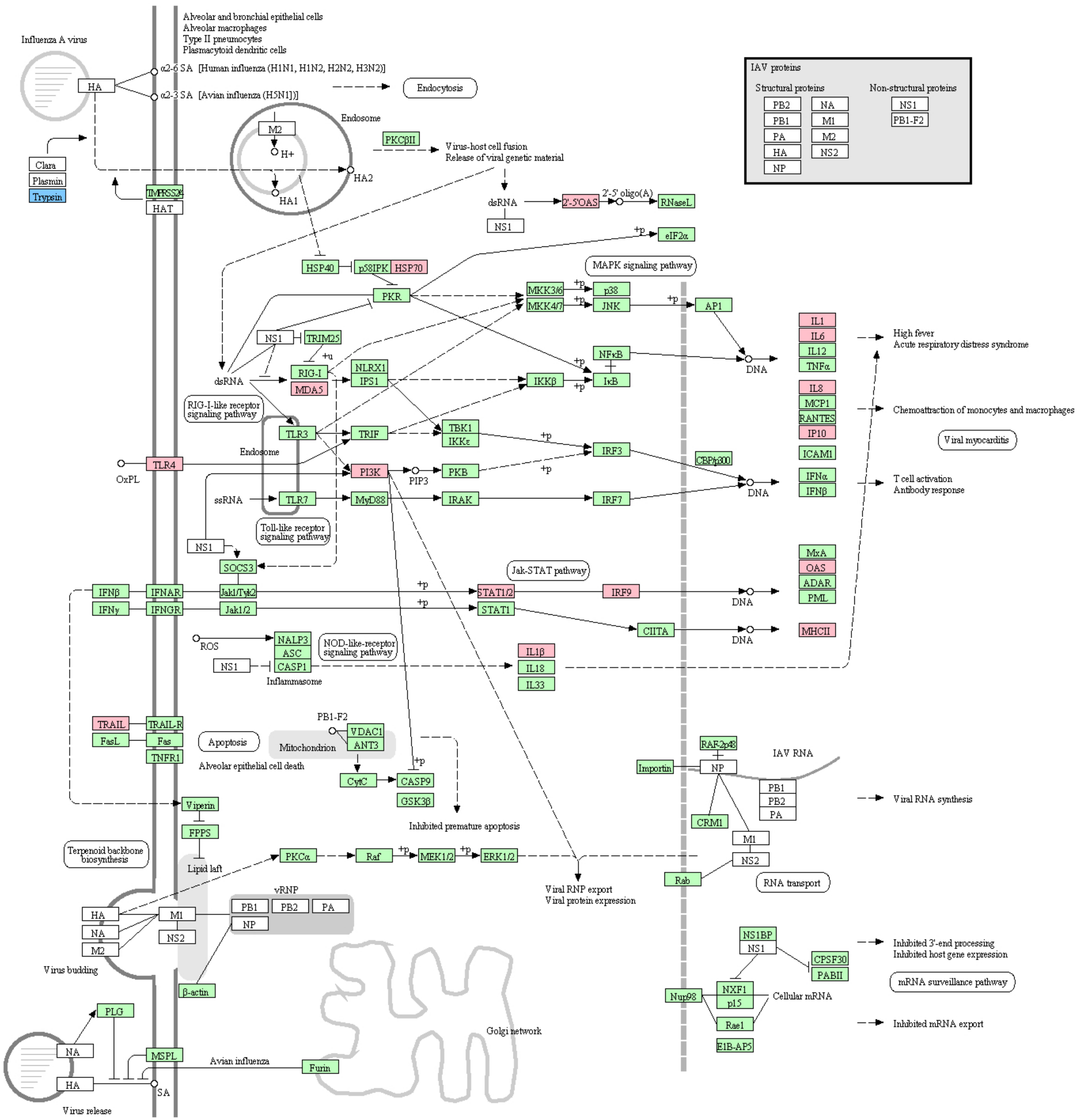
Influenza A virus
Alveolar and bronchial epithelial cells
Alveolar macrophages
Type II pneumocytes
Plasmacytoid dendritic cells
HA
α2-6 SA [Human influenza (H1N1, H1N2, H2N2, H3N2)]
α2-3 SA [Avian influenza (H5N1)]
Endocytosis
Endosome
M2
H+
HA2
HA1
PKCβII
Virus-host cell fusion
Release of viral genetic material
Clara
Plasmin
Trypsin
TMPRSS2
HAT
dsRNA
2'-5'OAS
2'-5' oligo(A)
RNaseL
NS1
eIF2α
HSP40
p58IPK
HSP70
PKR
MAPK signaling pathway
MKK3/6
MKK4/7
p38
JNK
AP1
NS1
TRIM25
RIG-I
MDA5
NLRX1
IPS1
NFκB
IκB
IKKβ
DNA
IL1
IL6
IL12
TNFα
High fever
Acute respiratory distress syndrome
RIG-I-like receptor signaling pathway
TLR3
TRIF
TBK1
IKKε
IRF3
IL8
MCP1
RANTES
IP10
Chemoattraction of monocytes and macrophages
Viral myocarditis
Endosome
TLR4
OxPL
PI3K
PIP3
PKB
CBP/p300
ICAM1
IFNα
IFNβ
T cell activation
Antibody response
ssRNA
TLR7
MyD88
IRAK
IRF7
Toll-like receptor signaling pathway
NS1
SOCS3
Jak-STAT pathway
MxA
OAS
ADAR
PML
IFNβ
IFNAR
Jak1/Tyk2
STAT1/2
IRF9
IFNγ
IFNGR
Jak1/2
STAT1
CIITA
MHCII
ROS
NALP3
ASC
CASP1
NOD-like-receptor signaling pathway
Inflammasome
IL1β
IL18
IL33
TRAIL
TRAIL-R
FasL
Fas
TNFR1
Apoptosis
Alveolar epithelial cell death
PB1-F2
Mitochondrion
VDAC1
ANT3
CytC
CASP9
GSK3β
Inhibited premature apoptosis
Viperin
FPPS
Terpenoid backbone biosynthesis
Lipid laft
PKCα
Raf
MEK1/2
ERK1/2
Viral RNP export
Viral protein expression
RAF-2p48
IAV RNA
Importin
NP
PB1
PB2
PA
Viral RNA synthesis
CRM1
M1
NS2
Rab
RNA transport
vRNP
HA
NA
M2
M1
NS2
PB1
PB2
PA
NP
Virus budding
β-actin
NS1BP
NS1
CPSF30
PABII
Inhibited 3'-end processing
Inhibited host gene expression
mRNA surveillance pathway
Nup98
NXF1
p15
Cellular mRNA
Rae1
E1B-AP5
Inhibited mRNA export
Golgi network
PLG
NA
HA
MSPL
Avian influenza
Furin
SA
Virus release
IAV proteins
Structural proteins
PB2
PB1
PA
HA
NP
NA
M1
M2
NS2
Non-structural proteins
NS1
PB1-F2
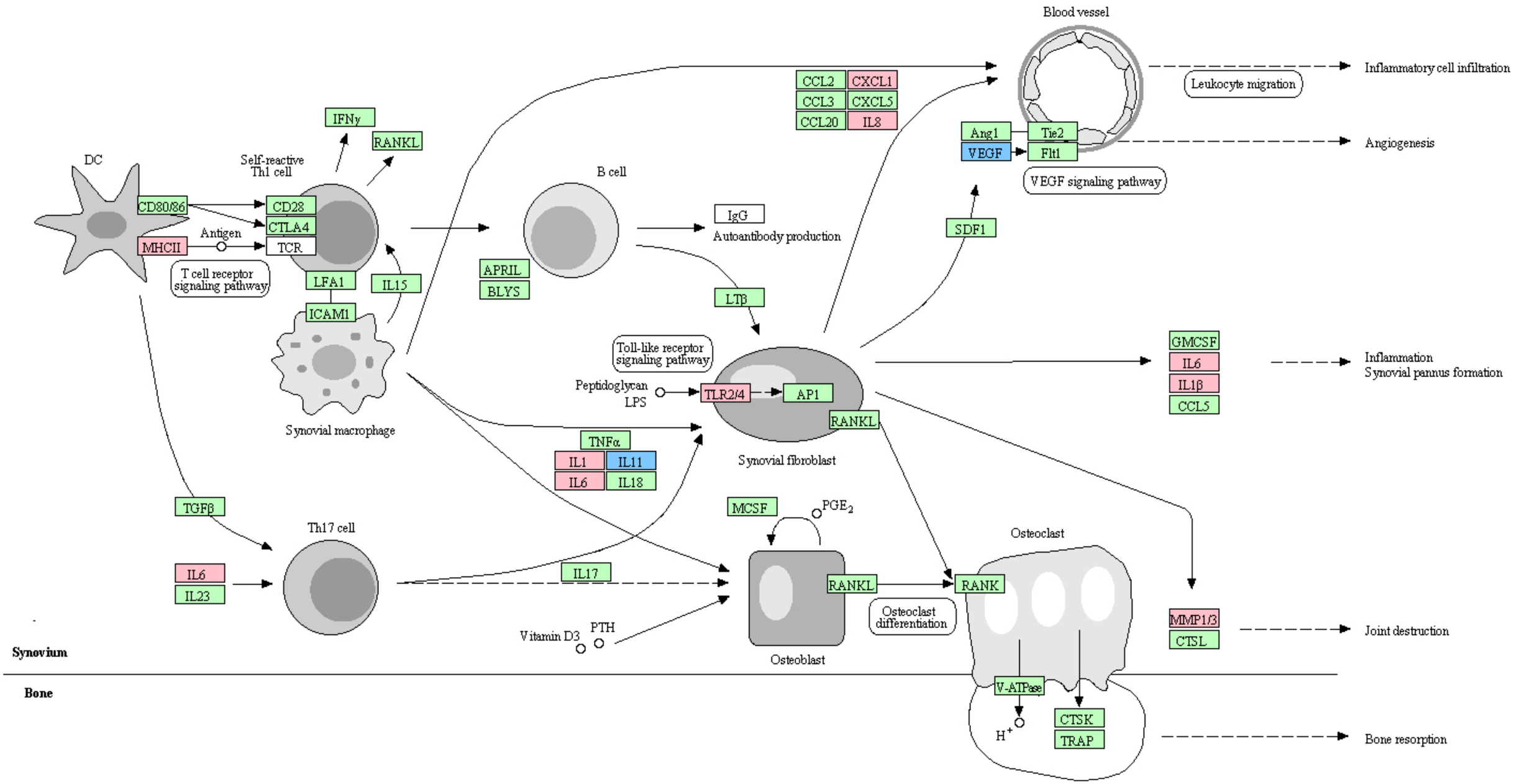
Rheumatoid Arthritis